2005 STANDARD DRAWINGS

Part 2

http://www.udot.utah.gov/index.php/m=c/tid=1091

Change 5, Issued November 9, 2005

Because of file size the 2005 Standard Drawings have been split into six files. The contents of each part are listed below.

Part 1
Index
Sheets 1B and 1C
AT Series Drawings
BA Series Drawings

Part 2
CB Series Drawings
CC Series Drawings
DB Series Drawings

Part 3
DD Series Drawings
DG Series Drawings
EN Series Drawings

Part 4
FG Series Drawings
GF Series Drawings
GW Series Drawings

Part 5
PV Series Drawings
SL Series Drawings
SN Series Drawings

Part 6
ST Series Drawings
SW Series Drawings
TC Series Drawings

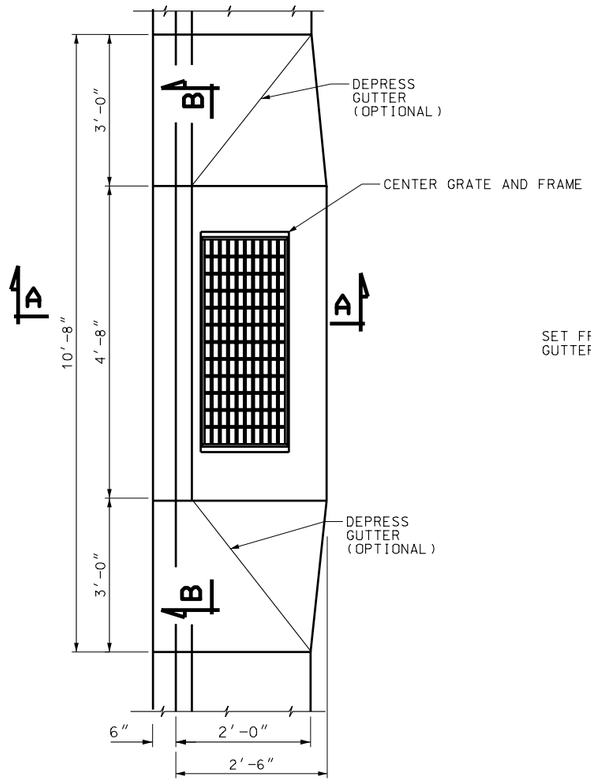

PLAN

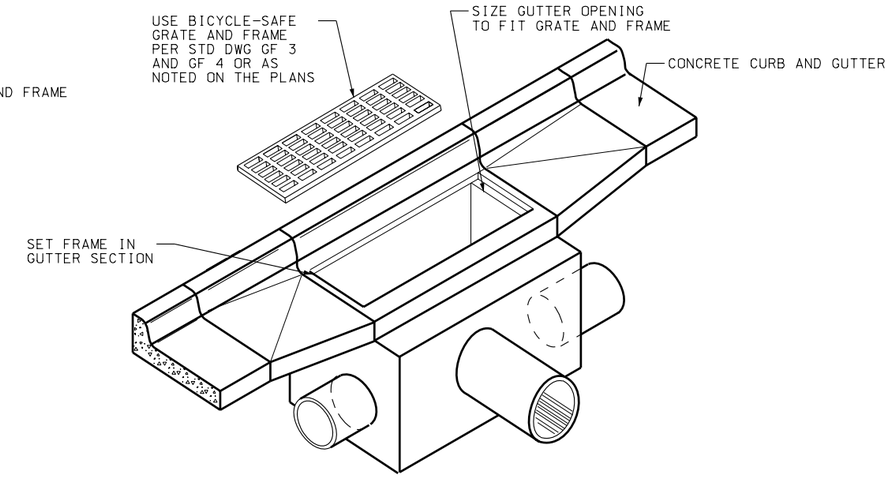

ISOMETRIC VIEW

NOTES:

1. USE CLASS AA(AE) CONCRETE.
2. TYPE II CEMENT (LOW ALKALI) REQUIRED.
3. FOR NUMBER, LOCATION AND SIZE OF PIPE(S) SEE ROADWAY PLANS.
4. PROVIDE 3/4" CHAMFER ON ALL EXPOSED CONCRETE CORNERS.
5. FOR GRATE AND FRAME SEE STD DWG GF 3 OR GF 4.

DESIGN DATA

HS 20 OR INTERSTATE ALTERNATE LOADING IN ACCORDANCE WITH AASHTO 17th EDITION SPECIFICATIONS.

STRUCTURAL STEEL: Fy = 36,000 psi

STRUCTURAL CONCRETE: f'c = 4,000 psi
fy = 60,000 psi
n = 8

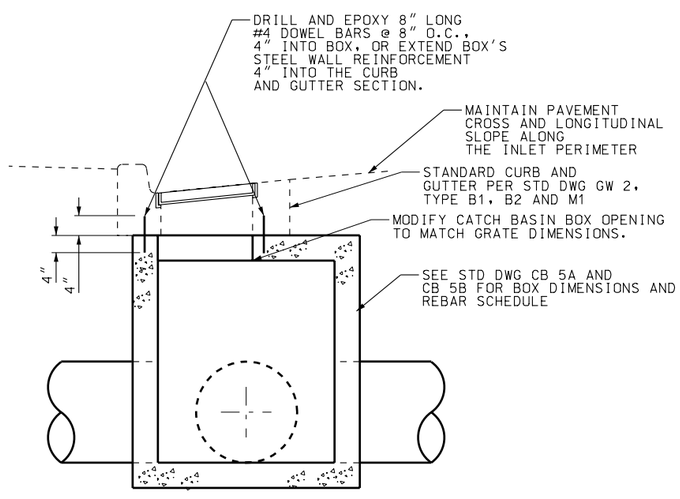

SECTION A-A

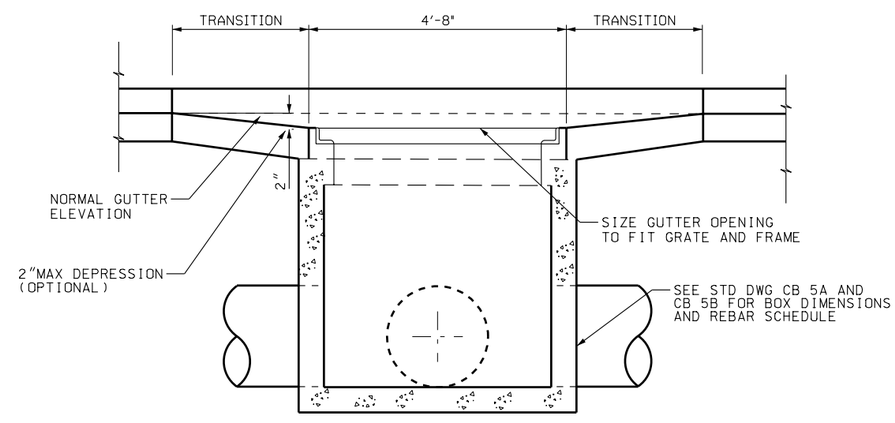

SECTION B-B

REVISIONS

NO.	DATE	APPR.	REMARKS
1	04/28/05	M.F.	WIDTH OF BOX IN SECTION B-B MODIFIED SO DIMENSION LINES ARE CLEARLY SHOWN.

UTAH DEPARTMENT OF TRANSPORTATION
STANDARD DRAWINGS FOR ROAD AND BRIDGE CONSTRUCTION
SALT LAKE CITY, UTAH

RECOMMENDED FOR APPROVAL — APR.28.2005 DATE
CHAIRMAN STANDARDS COMMITTEE APPROVED — APR.28.2005 DATE
DEPUTY DIRECTOR

CURB AND GUTTER INLET

STD DWG
CB 1

DGN File:L:\Standard.Drawings\Imperial\2005Approved\Change2Approved\cb01.dgn
10-MAY-2005

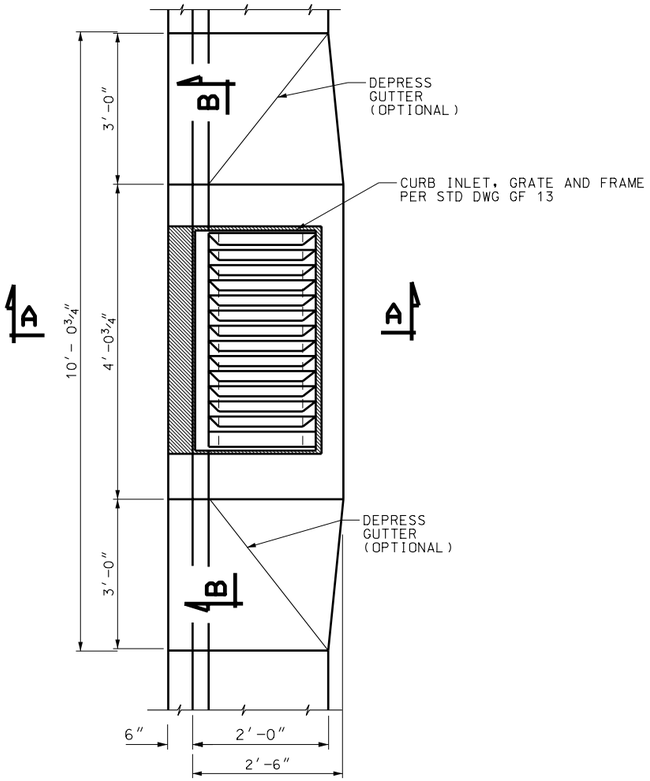

PLAN

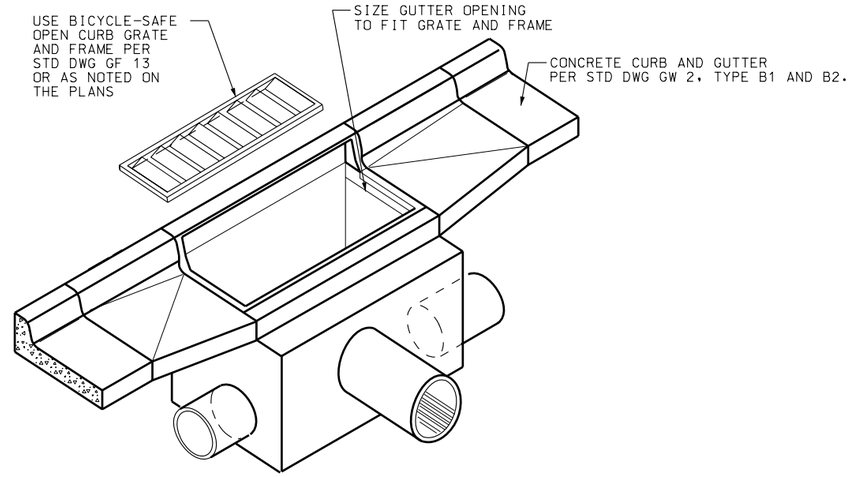

ISOMETRIC VIEW

NOTES:

1. USE CLASS AA(AE) CONCRETE.
2. TYPE II CEMENT (LOW ALKALI) REQUIRED.
3. FOR NUMBER, LOCATION, AND SIZE OF PIPE(S) SEE ROADWAY PLANS.
4. SEE PLANS FOR DEPRESSION DIMENSION.
5. PROVIDE ¾" CHAMFER ON ALL EXPOSED CONCRETE CORNERS.
6. FOR GRATE AND FRAME SEE STD DWG GF 13.

DESIGN DATA

HS 20 OR INTERSTATE ALTERNATE LOADING IN ACCORDANCE WITH AASHTO 17th EDITION SPECIFICATIONS.

STRUCTURAL STEEL: Fy = 36,000 psi

STRUCTURAL CONCRETE: f'c = 4,000 psi
fy = 60,000 psi
n = 8

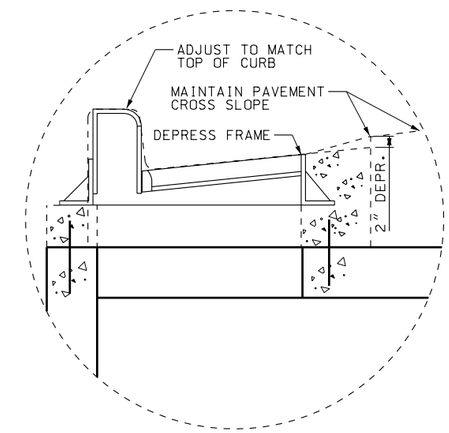

CURB DEPRESSION DETAIL

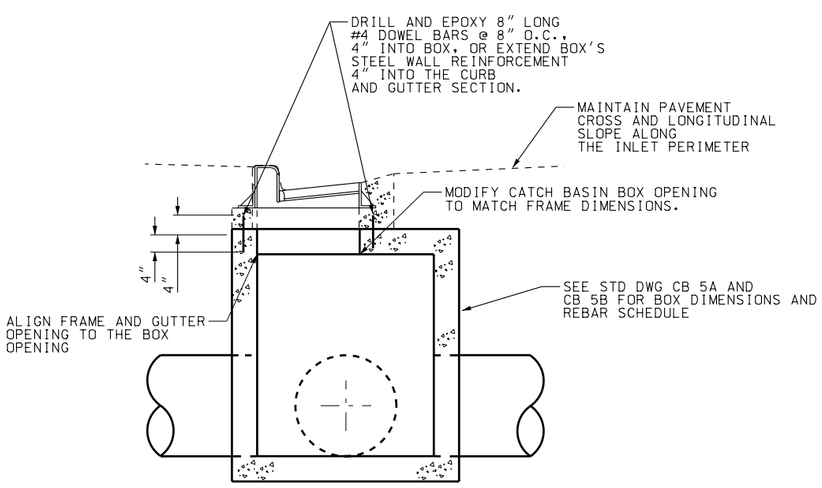

SECTION A-A

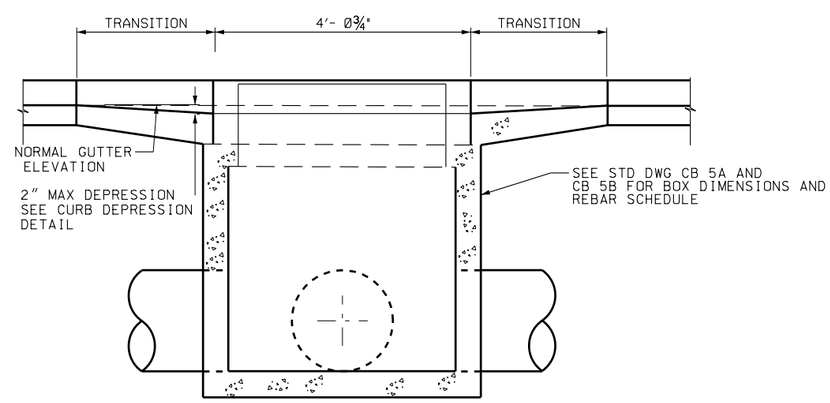

SECTION B-B

REVISIONS

NO.	DATE	APPR.	REMARKS
1	04/28/05	M.F.	WIDTH OF BOX IN SECTION B-B MODIFIED SO DIMENSION LINES ARE CLEARLY SHOWN.

UTAH DEPARTMENT OF TRANSPORTATION
STANDARD DRAWINGS FOR ROAD AND BRIDGE CONSTRUCTION
SALT LAKE CITY, UTAH

RECOMMENDED FOR APPROVAL — APR.28,2005 DATE
CHAIRMAN STANDARDS COMMITTEE APPROVED — APR.28,2005 DATE
DEPUTY DIRECTOR

OPEN CURB INLET

STD DWG
CB 2

DGN File:L:\Standard.Drawings\Imperial\2005Approved\xChange2Approved\cb02.dgn
10-MAY-2005

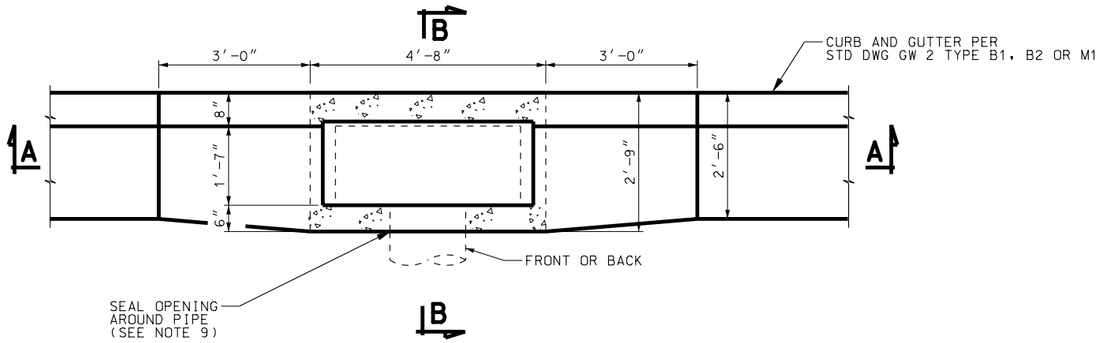

PLAN VIEW

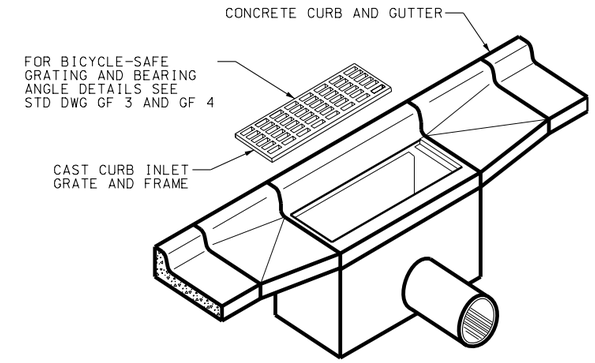

ISOMETRIC VIEW

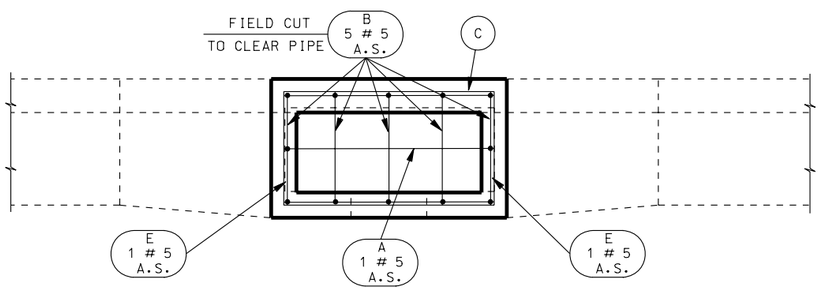

PLAN SECTION

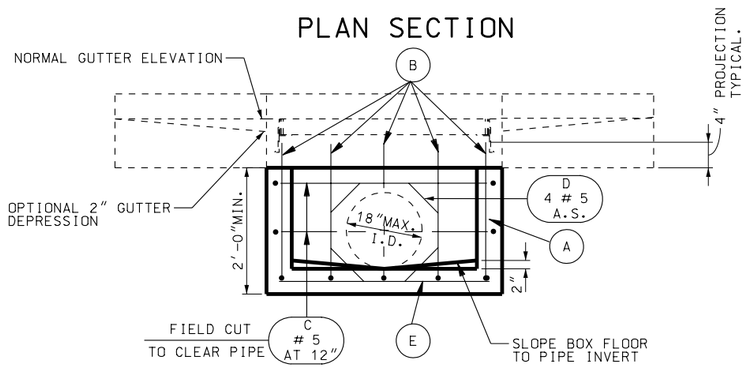

SECTION A-A

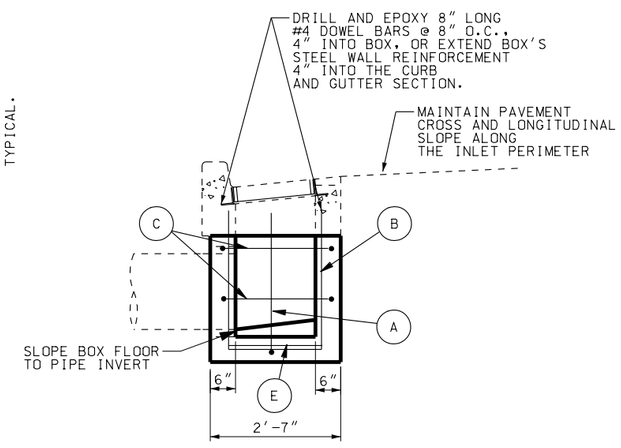

SECTION B-B

NOTES:

1. USE COATED DEFORMED BILLET REINFORCING STEEL BARS CONFORMING TO AASHTO M 284 OR M 111 AND M 31 GRADE 60 RESPECTIVELY.
2. USE CLASS AA(AE) CONCRETE.
3. USE TYPE II CEMENT (LOW ALKALI).
4. PROVIDE 3/4" CHAMFER ON ALL EXPOSED CONCRETE CORNERS.
5. PROVIDE 2" CONCRETE COVER TO REINFORCING STEEL.
6. FOR GRATE AND FRAME SEE STD DWG GF 3 AND GF 4.
7. FIELD CUT AND BEND REINFORCING STEEL AS NECESSARY TO CLEAR PIPE(S) AND MAINTAIN 2" COVER.
8. FOR LOCATION AND SIZE OF PIPE(S) SEE ROADWAY PLANS.
9. CENTER PIPE IN BOX OPENING, USE NON-SHRINK GROUT TO SEAL OPENING AROUND THE PIPE, OR USE PIPE MANUFACTURER PIPE-BOOT INSTEAD.
10. SIZE BOX HEIGHT TO MEET MINIMUM COVER FOR PIPE USED. (SEE STD DWG DG 4)
11. REPAIR ANY DAMAGE OR CUTS TO EPOXY COATING.

DESIGN DATA

HS 20 OR INTERSTATE ALTERNATE LOADING IN ACCORDANCE WITH AASHTO 17th EDITION SPECIFICATIONS.

STRUCTURAL STEEL: Fy = 36,000 psi

STRUCTURAL CONCRETE: f'c = 4,000 psi
fy = 60,000 psi
n = 8

REINFORCING STEEL LAYOUT

PROVIDE 2"MIN. COVER TO ALL BARS

BAR A	BAR B	BAR C	BAR D	BAR E
		8"		

REVISIONS

NO.	DATE	APPR.	REMARKS
1	04/28/05	M.F.	SECTION B-B BACK WALL THICKNESS CHANGED FROM 8" TO 6".

UTAH DEPARTMENT OF TRANSPORTATION
STANDARD DRAWINGS FOR ROAD AND BRIDGE CONSTRUCTION
SALT LAKE CITY, UTAH

RECOMMENDED FOR APPROVAL — APR.28.2005 DATE
CHAIRMAN STANDARDS COMMITTEE APPROVED — APR.28.2005 DATE
DEPUTY DIRECTOR

SHALLOW
CATCH BASIN

STD DWG
CB 3

DGN File:L:\Standard_Drawings\Imperial\2005Approved\xChange2Approved\cb03.dgn
18-MAY-2005

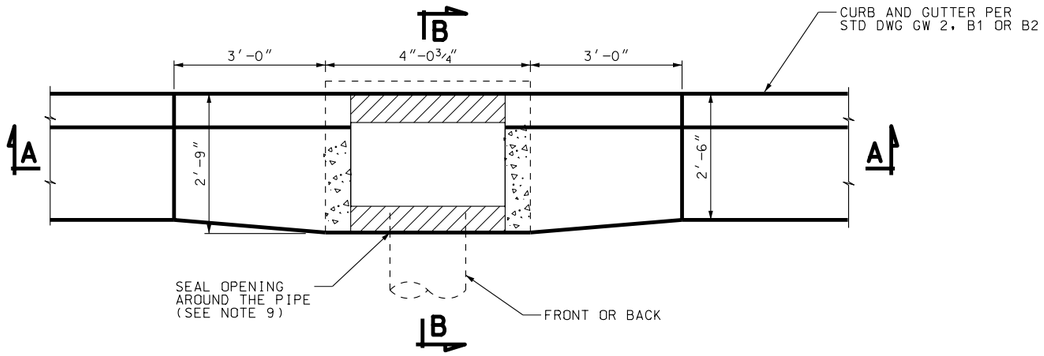

PLAN VIEW

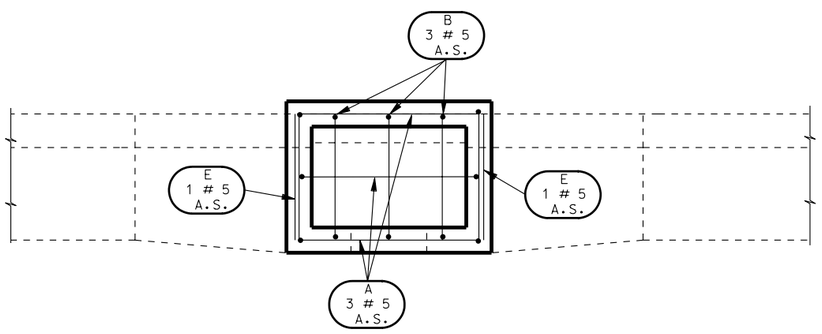

PLAN SECTION

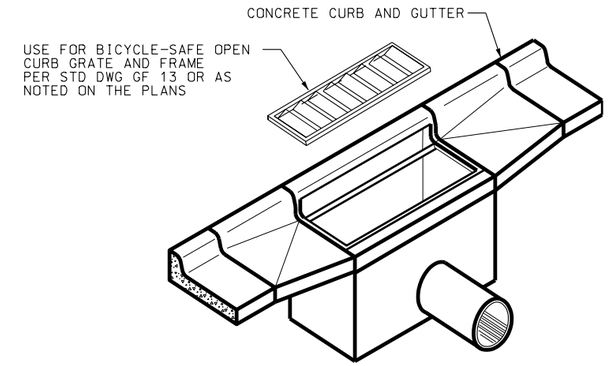

ISOMETRIC VIEW

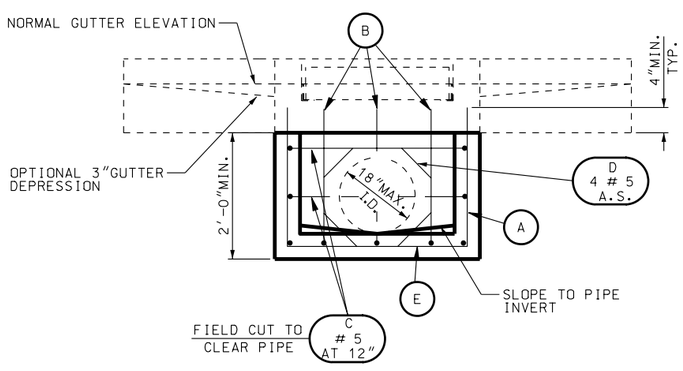

SECTION A-A

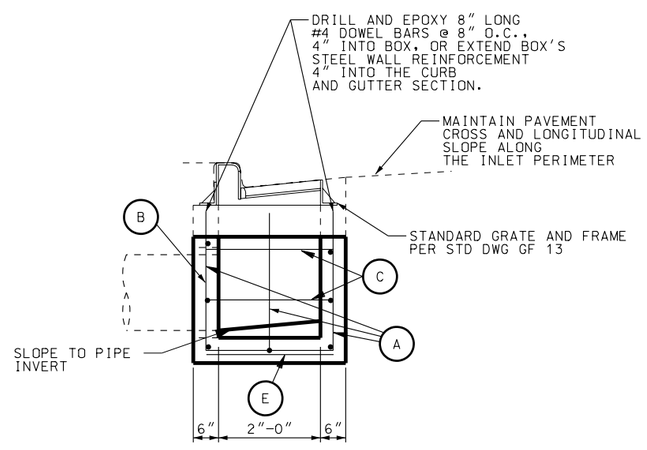

SECTION B-B

NOTES:

1. USE COATED DEFORMED BILLET REINFORCING STEEL BARS CONFORMING TO AASHTO M 284 OR M 111 AND M 31 GRADE 60 RESPECTIVELY.
2. USE CLASS AA(AE) CONCRETE.
3. USE TYPE II CEMENT (LOW ALKALI).
4. PROVIDE ¾″ CHAMFER ON ALL EXPOSED CONCRETE CORNERS.
5. PROVIDE 2″ CONCRETE COVER TO REINFORCING STEEL.
6. FOR GRATE AND FRAME SEE STD DWG GF 13.
7. FIELD CUT AND BEND REINFORCING STEEL AS NECESSARY TO CLEAR PIPE(S) AND MAINTAIN 2″ COVER.
8. FOR LOCATION AND SIZE OF PIPE(S) SEE ROADWAY PLANS.
9. CENTER PIPE IN OPENING, USE APPROVED NON-SHRINK GROUT TO SEAL OPENING AROUND THE PIPE, OR USE APPROVED PIPE MANUFACTURER PIPE-BOOT INSTEAD.
10. SIZE BOX HEIGHT TO MEET MINIMUM COVER FOR PIPE USED. (SEE STD DWG 4)
11. REPAIR ANY DAMAGE OR CUTS TO EPOXY COATING.

DESIGN DATA

HS 20 OR INTERSTATE ALTERNATE LOADING IN ACCORDANCE WITH AASHTO 17 th EDITION SPECIFICATIONS.

STRUCTURAL STEEL: Fy = 36,000 psi

STRUCTURAL CONCRETE:
f′c = 4,000 psi
fy = 60,000 psi
n = 8

REINFORCING STEEL LAYOUT

PROVIDE 2″ MIN. COVER TO ALL BARS

BAR A	BAR B	BAR C	BAR D	BAR E
		8″		

NO.	DATE	APPR.	REMARKS

REVISIONS

UTAH DEPARTMENT OF TRANSPORTATION
STANDARD DRAWINGS FOR ROAD AND BRIDGE CONSTRUCTION
SALT LAKE CITY, UTAH

RECOMMENDED FOR APPROVAL — JAN.01,2005 DATE
CHAIRMAN STANDARDS COMMITTEE
APPROVED — JAN.01,2005 DATE
DEPUTY DIRECTOR

OPEN CURB SHALLOW CATCH BASIN

STD DWG
CB 4

DGN File:N:\Esd\Standard_Drawings\Imperial\2005Approved\Catch Basins and Cleanouts (CB)\cb04.dgn
15-DEC-2004

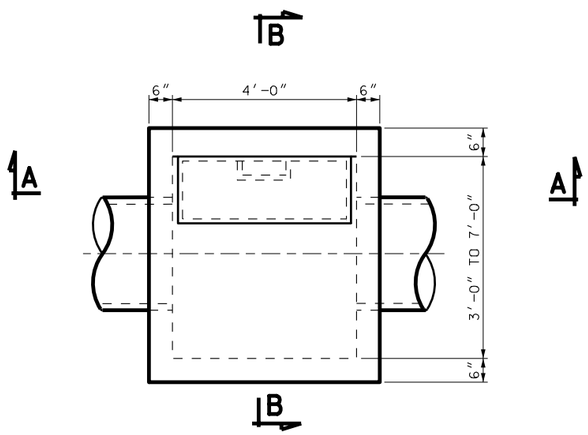

PLAN

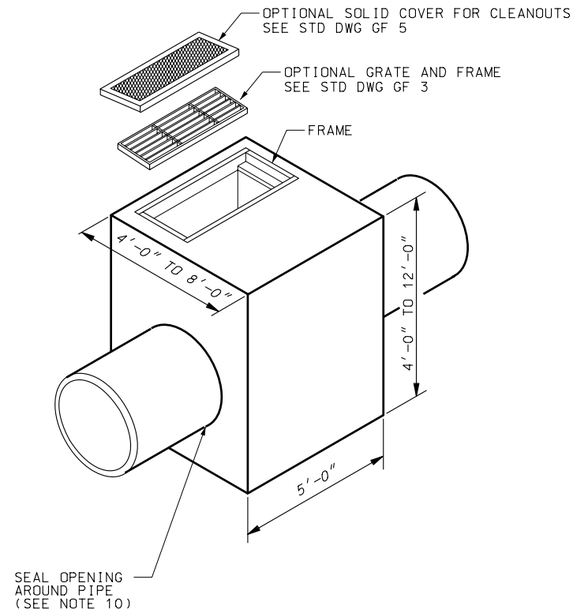

NOTES

1. USE COATED DEFORMED BILLET REINFORCING STEEL BARS CONFORMING TO AASHTO M 284 OR M 111 AND M 31, GRADE 60 RESPECTIVELY.
2. USE TYPE II CEMENT (LOW ALKALI).
3. PROVIDE 3/4" CHAMFER ON ALL EXPOSED CONCRETE CORNERS EXCEPT WHERE NOTED OTHERWISE.
4. USE CONCRETE CLASS AA(AE).
5. PROVIDE MINIMUM 2" COVER FOR ALL REINFORCING STEEL.
6. FOR CURB AND GUTTER APPLICATIONS SEE STD DWG CB 1 AND CB 2 FOR BOX ELEVATIONS. INCLUDE CONCRETE QUANTITIES FOR CURB AND GUTTER IN ROADWAY QUANTITIES.
7. FOR MANHOLE STEPS SEE STD DWG GF 6.
8. USE 8" LONG, # 4 DOWEL BARS @ 8" O.C. MAX. OR EXTEND BOX REBARS 4"INTO THE CURB AND GUTTER, TO ATTACH CURB AND GUTTER TO THE BOX.
9. WHEN USING THE BOX AS AN INLET, SET EDGES OF THE BOX TO MATCH PAVEMENT FINISH GRADE AROUND BOX PERIMETER. SET TOP OF BOX SURFACE TO MATCH PAVEMENT CROSS AND LONGITUDINAL SLOPES. RESET ANY BOXES WHERE BOX SURFACE OR GRATE AND FRAME IS NOT FLUSH WITH PAVEMENT. DO NOT EXCEED 1/4" GRATE DEPRESSION.
10. CENTER PIPE IN BOX OPENING, USE NO-SHRINK GROUT TO SEAL OPENING AROUND THE PIPE, OR USE PIPE MANUFACTURER PIPE-BOOT INSTEAD.

DESIGN DATA

HS 20 OR INTERSTATE ALTERNATE LOADING IN ACCORDANCE WITH AASHTO 17th EDITION SPECIFICATIONS.

STRUCTURAL STEEL: Fy = 36,000 psi

STRUCTURAL CONCRETE: f'c = 4,000 psi
fy = 60,000 psi
n = 8

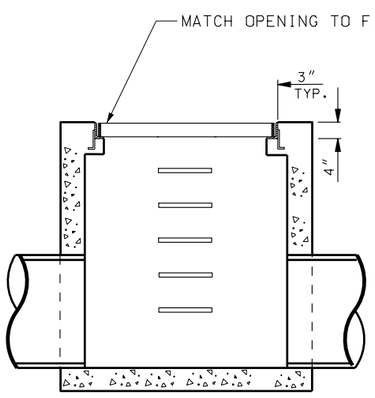

SECTION A-A

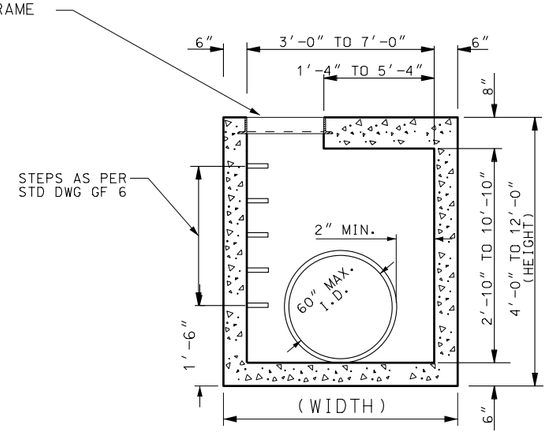

SECTION B-B

CATCH BASIN / CLEANOUT BOX

GRATE AND FRAME APPLICATION

QUANTITIES

(FOR DESIGN INFORMATION ONLY)

USE THE FOLLOWING EQUATIONS FOR CALCULATING VOLUME OF CONCRETE AND WEIGHT OF STEEL:
(ENTER ALL DIMENSIONS IN FEET)

CONCRETE VOLUME

BOX WIDTHS OF 4' TO 8' & DEPTHS OF 4' TO 12'

CONCRETE VOLUME (CU YDS) = (0.037*WIDTH+0.1853) *DEPTH+ (0.2161*WIDTH - 0.2811)

TO CALCULATE VOLUME OF CONCRETE OF PIPE HOLES
VOLUME OF HOLES (CU YDS) = 0.0083 * (PIPE DIAMETER) - 0.0929

WEIGHT OF REINFORCING STEEL

BOX WIDTHS OF 4' UP TO 8' & DEPTHS OF 4' TO 12'

REBAR WEIGHT (LBS) = (4.101*WIDTH + 19.869) * DEPTH + (19.742 * WIDTH + 15.267)

REVISIONS

NO.	DATE	APPR.	REMARKS
1	06/30/05	M.F.	CORRECTED SECTION B-B TO CHANGE 2" MAX TO 2" MIN.

UTAH DEPARTMENT OF TRANSPORTATION
STANDARD DRAWINGS FOR ROAD AND BRIDGE CONSTRUCTION
SALT LAKE CITY, UTAH

RECOMMENDED FOR APPROVAL — JUN.30,2005 DATE
CHAIRMAN STANDARDS COMMITTEE
APPROVED — JUN.30,2005 DATE
DEPUTY DIRECTOR

STANDARD DRAWING TITLE
STANDARD CATCH BASIN AND CLEANOUT BOX

STD DWG
CB 5A

DGN File:L:\Standard Drawings\Imperial\2005Approved\xChange3\approved\cb05A.dgn
11-JUL-2005

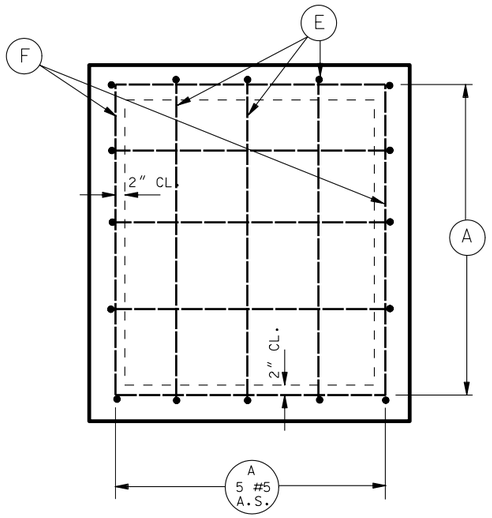

PLAN BOTTOM SLAB

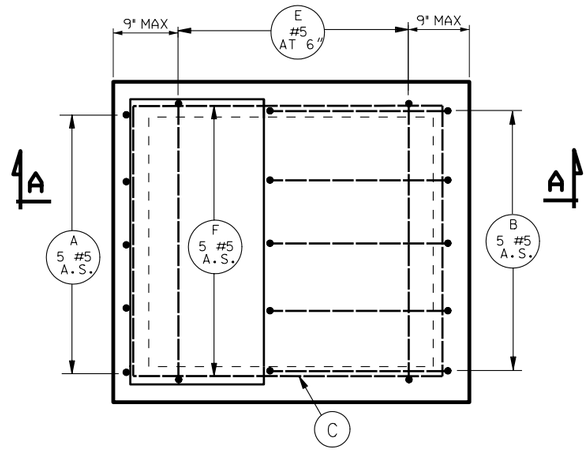

PLAN TOP SLAB

NOTES

1. PROVIDE FORMED INVERT AS SHOWN IN THE DETAIL ON THIS SHEET.
2. FIELD CUT AND BEND REINFORCING STEEL AS NECESSARY TO CLEAR PIPE(S) AND GRATE OPENINGS, AND MAINTAIN 2" COVER.
3. SEE STD DWG CB 5A FOR ALLOWABLE DIMENSIONS.
4. MAXIMUM PIPE DIMENSIONS ARE FOR PIPES PERPENDICULAR TO WALLS OF BOX. DETERMINE CLEARANCES FOR SKEWED PIPES.
5. FOR MANHOLE STEP DETAILS, SEE STD DWG GF 6.
6. ALL REINFORCING BARS TO BE #5 BARS @ 12" UNLESS OTHERWISE SHOWN.
7. EXTEND BARS A AND B INTO CURB AND GUTTER WHEN CASTING FOR CATCH BASIN ON STD DWG CB 1 AND CB 2.
8. REPAIR ANY DAMAGE OR CUTS TO EPOXY COATING.

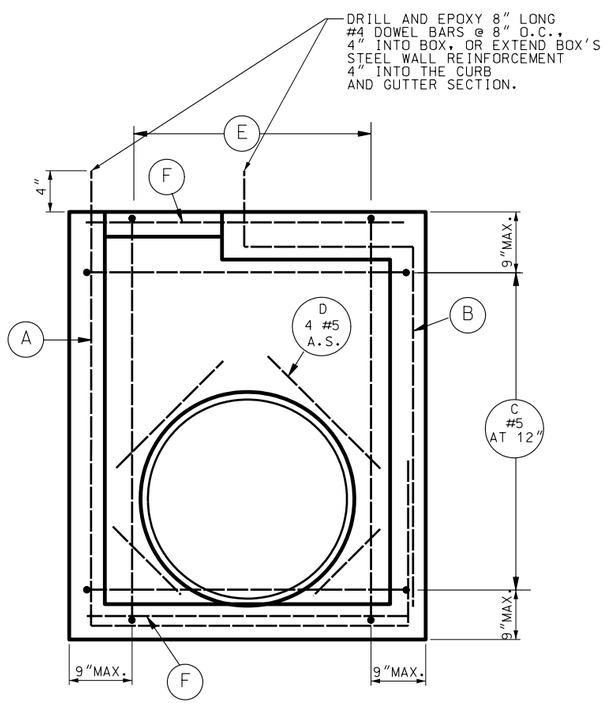

SECTION A-A

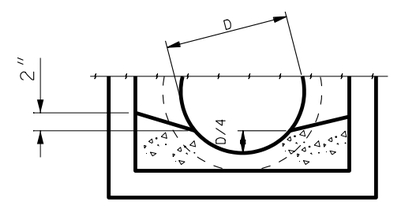

FORMED INVERT

REINFORCING STEEL LAYOUT

PROVIDE 2" MIN. COVER TO ALL BARS

BAR A	BAR B	BAR C	BAR D	BAR E	BAR F
		8"		8"	

REVISIONS

NO.	DATE	APPR.	REMARKS

UTAH DEPARTMENT OF TRANSPORTATION
STANDARD DRAWINGS FOR ROAD AND BRIDGE CONSTRUCTION
SALT LAKE CITY, UTAH

RECOMMENDED FOR APPROVAL — JAN.01,2005 DATE
CHAIRMAN STANDARDS COMMITTEE APPROVED — JAN.01,2005 DATE
DEPUTY DIRECTOR

STANDARD CATCH BASIN AND CLEANOUT BOX SECTION

STANDARD DRAWING TITLE

STD DWG
CB 5B

DGN File:N:\Esa\Standard.Drawings\Imperial\2005Approved\Catch Basins and Cleanouts (CB)\cb05b.dgn
15-DEC-2004

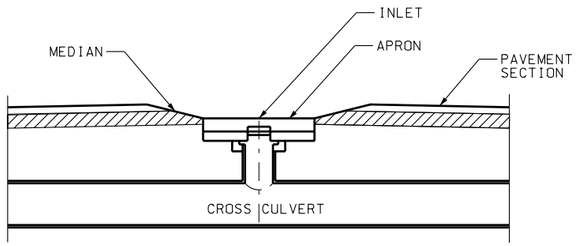

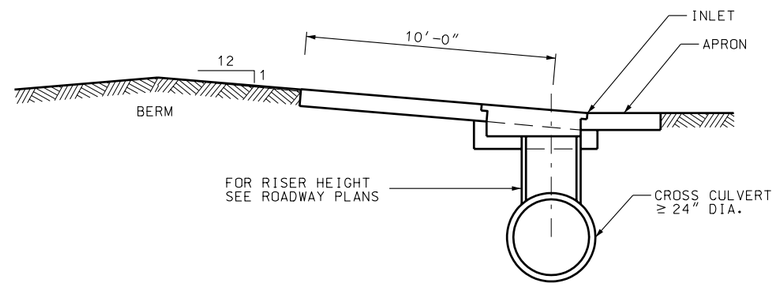

MEDIAN DROP INLET AND APRON SITUATION LAYOUT

NOTES

1. USE COATED BILLET REINFORCING STEEL BARS CONFORMING TO AASHTO M 284 OR M 111 AND M 31 GRADE 60 RESPECTIVELY.
2. USE 24" DIA. PIPE RISER UNLESS OTHERWISE SPECIFIED ON THE PLANS.
3. TYPE II CEMENT (LOW ALKALI) REQUIRED.
4. FOR GRATE AND FRAME SEE STD DWG GF 3.
5. CONSTRUCT A BERM AS PART OF DROP INLET. TYPE "B" DROP INLET ON STD DWG 7A AND 7B DOES NOT REQUIRE A BERM.
6. USE STRAIGHT #5 REBAR AT 18" ON CENTER, EXCEPT AS NOTED OTHERWISE. CUT AND FIELD BEND BARS WHERE NECESSARY TO CLEAR PIPES.
7. REPAIR ANY DAMAGE OR CUTS TO EPOXY COATING.

DESIGN DATA

HS 20 OR INTERSTATE ALTERNATE LOADING IN ACCORDANCE WITH AASHTO 17th EDITION SPECIFICATIONS.

STRUCTURAL STEEL: Fy = 36,000 psi

STRUCTURAL CONCRETE: f'c = 4,000 psi
fy = 60,000 psi
n = 8

QUANTITIES:

(SEE TABLES IN STANDARD DRAWING CB 6B)

APRON DETAIL:

(SEE STANDARD DRAWING CB 6B)

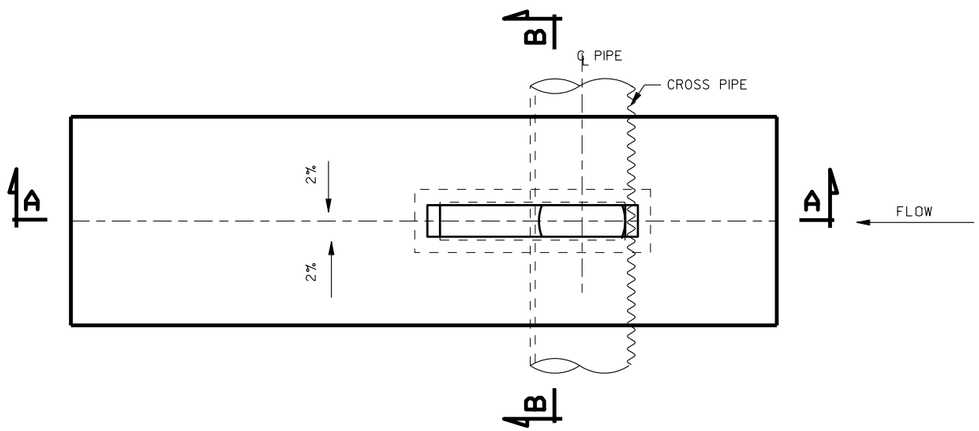

PLAN

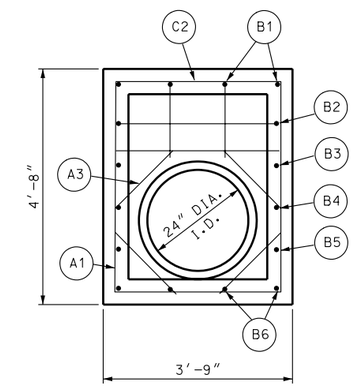

SECTION C-C

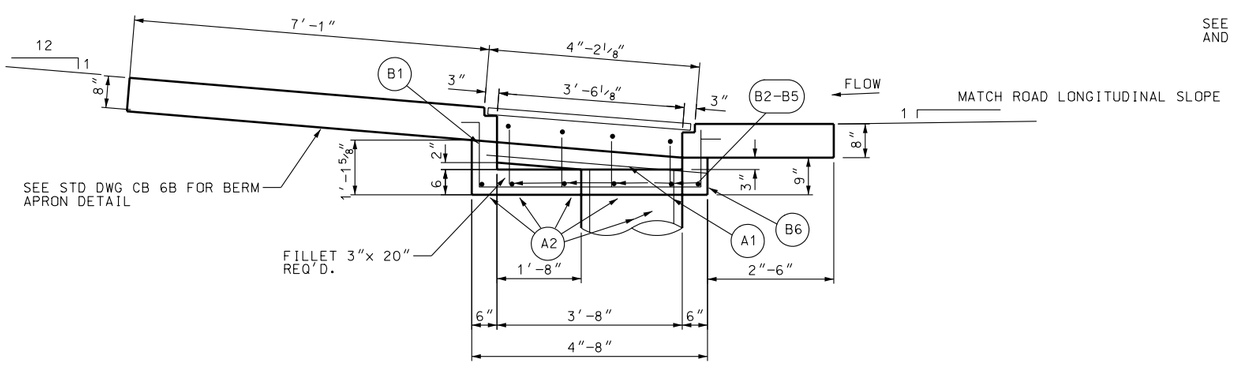

SECTION A-A

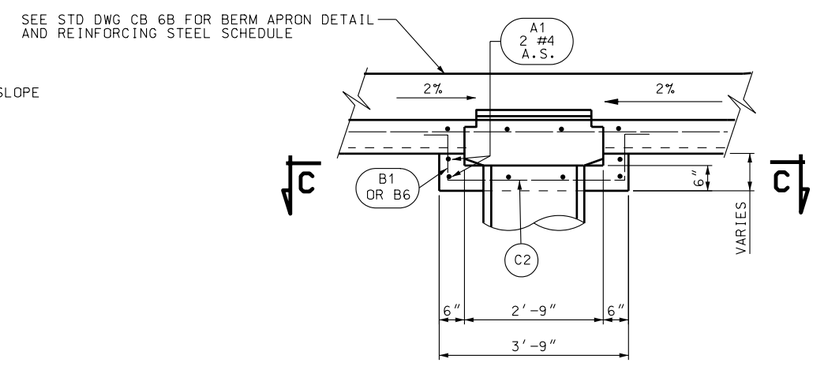

SECTION B-B

NO.	DATE	APPR.	REMARKS

REVISIONS

UTAH DEPARTMENT OF TRANSPORTATION
STANDARD DRAWINGS FOR ROAD AND BRIDGE CONSTRUCTION
SALT LAKE CITY, UTAH

RECOMMENDED FOR APPROVAL — JAN.01,2005 DATE
CHAIRMAN STANDARDS COMMITTEE
APPROVED — JAN.01,2005 DATE
DEPUTY DIRECTOR

DROP INLET TYPE "A"

STANDARD DRAWING TITLE

STD DWG
CB 6A

DGN File:N:\Std\Standard Drawings\Imperial\2005Approved\Catch Basins and Cleanouts (CB)\cb06A.dgn
15-DEC-2004

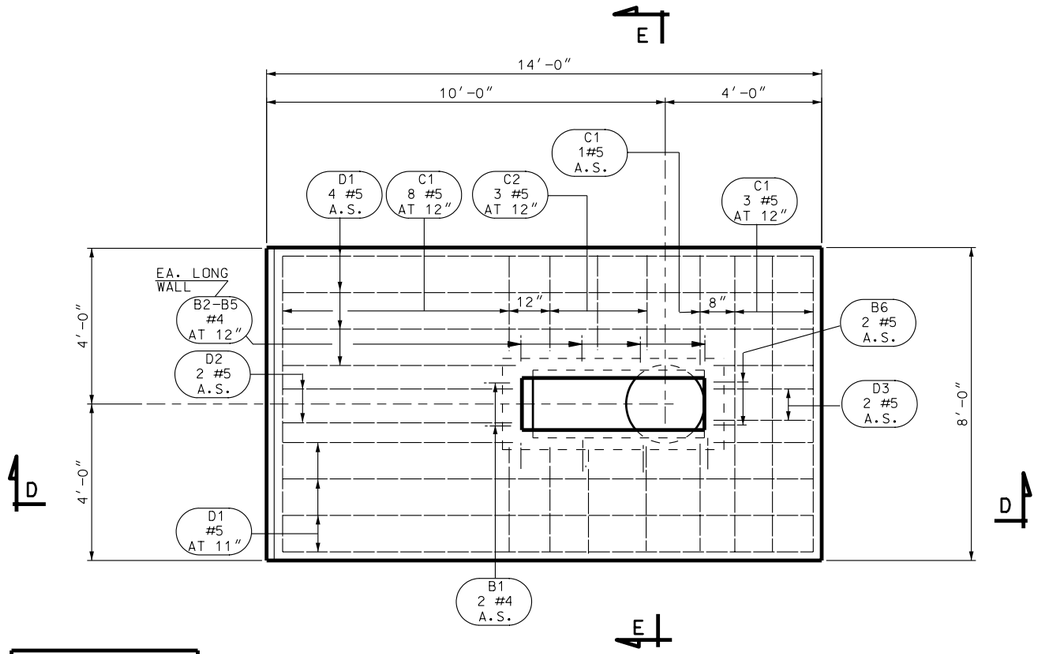

PLAN

NOTES:

1. CENTER APRON ON CHANNEL FLOWLINE.
2. PLACE 6″ OF UNTREATED BASE COURSE AND COMPACT PER UDOT STANDARD SPECIFICATIONS UNDER EACH APRON PRIOR TO FORMING.
3. FIELD BEND D1 BARS AS REQUIRED TO CONFORM TO SLOPE.
4. PROVIDE 2″ CONCRETE COVER TO REINFORCING STEEL EXCEPT WHERE NOTED OTHERWISE.
5. USE BERM APRON WITH DROP INLET TYPE "A."
6. REPAIR ANY DAMAGE OR CUTS TO EPOXY COATING.

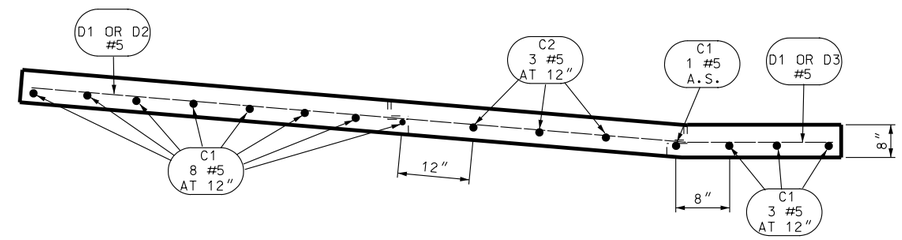

SECTION D-D

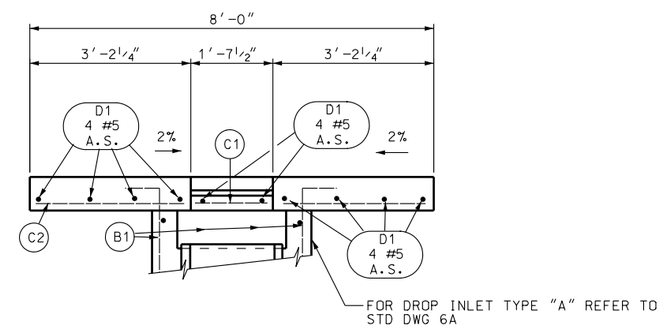

SECTION E-E

QUANTITIES
(FOR INFORMATION ONLY)

REINF. STEEL (LB.)	CONC. (CU.YD.)
300	2.7

REINFORCING STEEL SCHEDULE

A1			A2			A3		
SIZE	NO.	LENGTH	SIZE	NO.	LENGTH	SIZE	NO.	LENGTH
4	4	4′-4″	4	5	2′-8″	4	4	1′-6″

B1			B2			B3			B4			B5			B6		
SIZE	NO.	a (1′-2)	SIZE	NO.	a (1′-2)	SIZE	NO.	a (1′-2)	SIZE	NO.	a (1′-2)	SIZE	NO.	a (1′-2)	SIZE	NO.	a (1′-2)
4	4	1′-6″	4	2	1′-5″	4	2	1′-4″	4	2	1′-3″	4	2	1′-2″	4	4	1′-0″

C1			C2		
SIZE	NO.	LENGTH	SIZE	NO.	LENGTH
4	12	7′-8″	5	6	3′-5″

D1			D2			D3		
SIZE	NO.	LENGTH	SIZE	NO.	LENGTH	SIZE	NO.	LENGTH
5	8	13′-8″	5	2	5′-5″	5	2	3′-8″

NO.	DATE	APPR.	REMARKS

REVISIONS

UTAH DEPARTMENT OF TRANSPORTATION
STANDARD DRAWINGS FOR ROAD AND BRIDGE CONSTRUCTION
SALT LAKE CITY, UTAH

RECOMMENDED FOR APPROVAL — JAN.01,2005 DATE
CHAIRMAN STANDARDS COMMITTEE APPROVED — JAN.01,2005 DATE
DEPUTY DIRECTOR

BERM APRON
WITH DROP INLET
TYPE "A"

STANDARD DRAWING TITLE

STD DWG
CB 6B

DGN File:N:\Esa\Standard.Drawings\Imperial\2005Approved\Catch Basins and Cleanouts (CB)\cb06B.dgn
15-DEC-2004

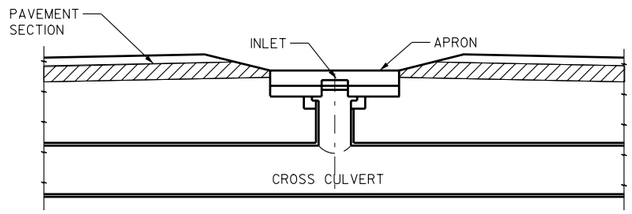

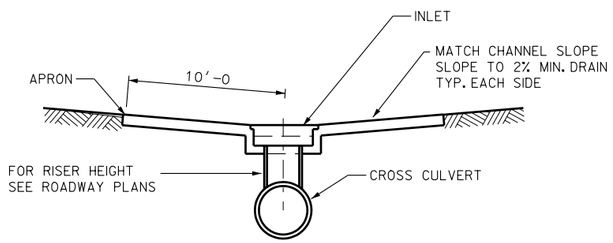

MEDIAN DROP INLET SITUATION LAYOUT

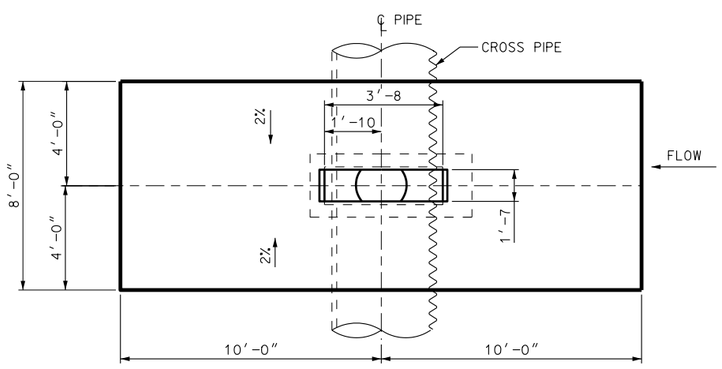

DROP INLET AND APRON LAYOUT PLAN

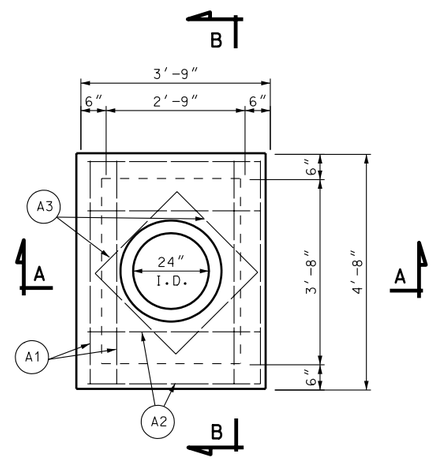

DROP INLET PLAN VIEW

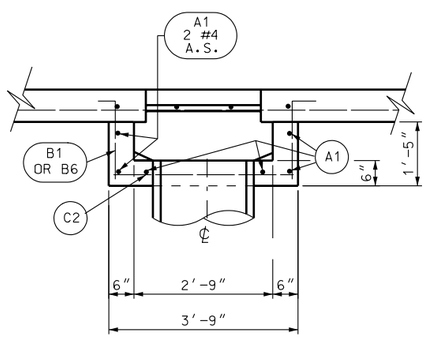

SECTION B-B

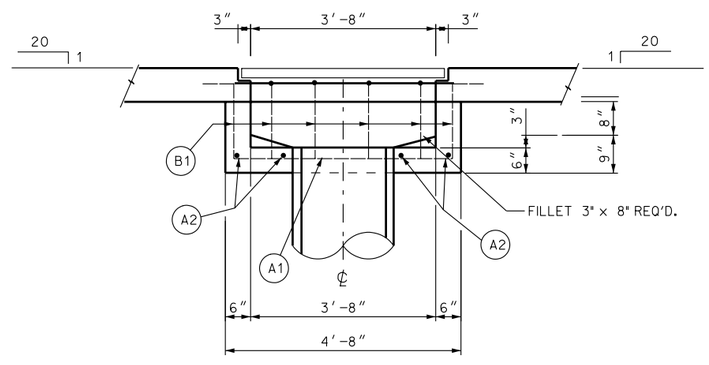

SECTION A-A

NOTES

1. USE COATED DEFORMED BILLET STEEL BARS CONFORMING TO AASHTO M 284 OR M 111 AND M 31 GRADE 60 RESPECTIVELY.
2. USE 18" DIA. PIPE RISER UNLESS OTHERWISE SPECIFIED.
3. TYPE II CEMENT (LOW ALKALI) REQUIRED.
4. FOR GRATE AND FRAME SEE STD DWG GF 3.
5. USE STRAIGHT #5 REBAR AT 18" CENTERS EXCEPT AS NOTED OTHERWISE. CUT AND FIELD BEND BARS WHERE NECESSARY TO CLEAR PIPES.
6. REPAIR ANY DAMAGE OR CUTS TO EPOXY COATING.

DESIGN DATA

HS 20 OR INTERSTATE ALTERNATE LOADING IN ACCORDANCE WITH AASHTO 17th EDITION SPECIFICATIONS.

STRUCTURAL STEEL: Fy = 36,000 psi

STRUCTURAL CONCRETE: f'c = 4,000 psi
fy = 60,000 psi
n = 8

QUANTITIES

SEE TABLES ON STD DWG CB 7B

APRON

SEE STD DWG CB 7B

NO.	DATE	APPR.	REMARKS

REVISIONS

UTAH DEPARTMENT OF TRANSPORTATION
STANDARD DRAWINGS FOR ROAD AND BRIDGE CONSTRUCTION
SALT LAKE CITY, UTAH

RECOMMENDED FOR APPROVAL — JAN.01.2005 DATE
CHAIRMAN STANDARDS COMMITTEE
APPROVED — JAN.01.2005 DATE
DEPUTY DIRECTOR

DROP INLET TYPE "B"

STANDARD DRAWING TITLE

STD DWG
CB 7A

DGN File:N:\Esa\Standard_Drawings\Imperial\2005Approved\Catch Basins and Cleanouts (CB)\cb07A.dgn
15-DEC-2004

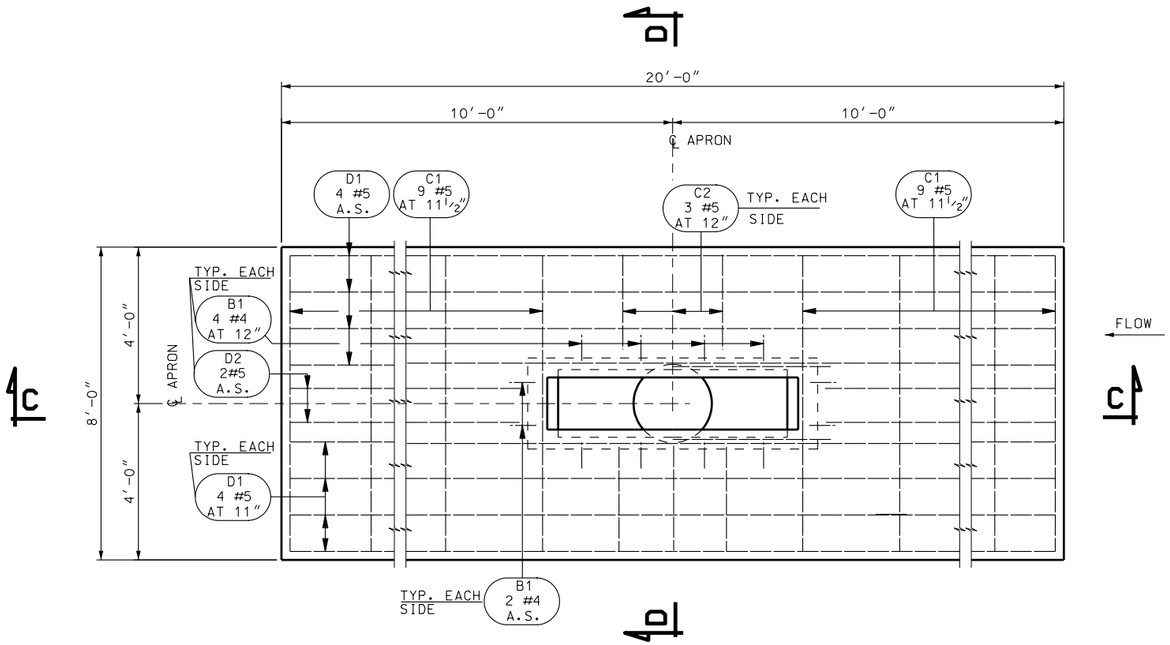

PLAN

NOTES:

1. CENTER APRON ON CHANNEL FLOWLINE.
2. PLACE 6″ OF UNTREATED BASE COURSE AND COMPACT PER UDOT STANDARD SPECIFICATIONS UNDER EACH APRON PRIOR TO FORMING.
3. FIELD BEND D1 BARS AS REQUIRED TO CONFORM TO SLOPE.
4. PROVIDE 2″ CONCRETE COVER TO REINFORCING STEEL EXCEPT WHERE NOTED OTHERWISE.
5. USE NORMAL APRON WITH DROP INLET TYPE "B."
6. REPAIR ANY DAMAGE OR CUTS TO EPOXY COATING.

QUANTITIES
(FOR INFORMATION ONLY)

REINF. STEEL (LB.)	CONC. (CU.YD.)
606	3.9

REINFORCING STEEL SCHEDULE

A1			A2			A3		
SIZE	NO.	LENGHT	SIZE	NO.	LENGHT	SIZE	NO.	LENGHT
4	4	4′-4″	4	8	3′-5″	4	4	2′-0″

B1		
SIZE	NO.	a (1′-2″)
4	12	VARIES

C1			C2		
SIZE	NO.	LENGHT	SIZE	NO.	LENGHT
5	18	19′-6″	5	3	2′-10″

D1			D2		
SIZE	NO.	LENGHT	SIZE	NO.	LENGHT
5	8	19′-8″	5	4	5′-5″

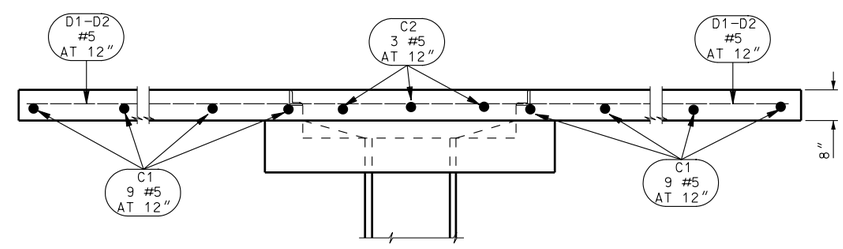

SECTION C-C

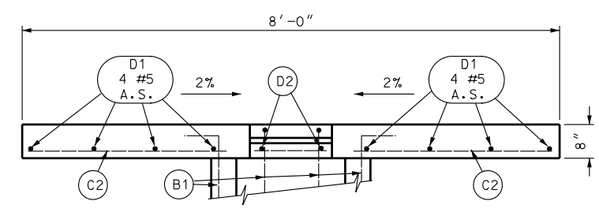

SECTION D-D

NO.	DATE	APPR.	REMARKS

REVISIONS

UTAH DEPARTMENT OF TRANSPORTATION
STANDARD DRAWINGS FOR ROAD AND BRIDGE CONSTRUCTION
SALT LAKE CITY, UTAH

RECOMMENDED FOR APPROVAL — JAN.01.2005 DATE
CHAIRMAN STANDARDS COMMITTEE APPROVED — JAN.01.2005 DATE
DEPUTY DIRECTOR

NORMAL APRON
WITH DROP INLET
TYPE "B"

STANDARD DRAWING TITLE

STD DWG
CB 7B

DGN File: N:\Esa\Standard_Drawings\Imperial\2005Approved\Catch Basins and Cleanouts (CB)\cb078.dgn
15-DEC-2004

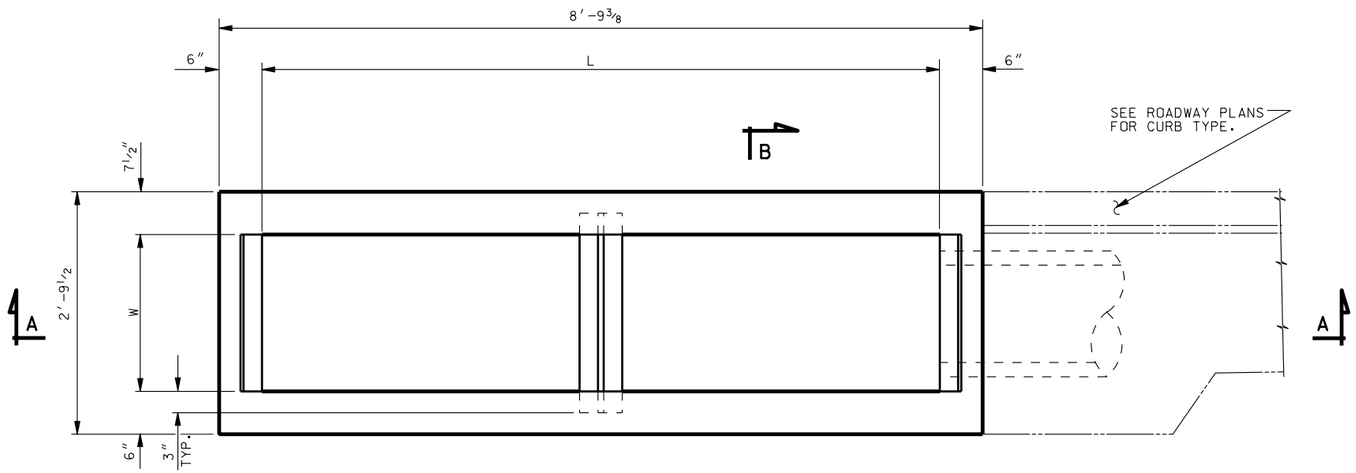

PLAN

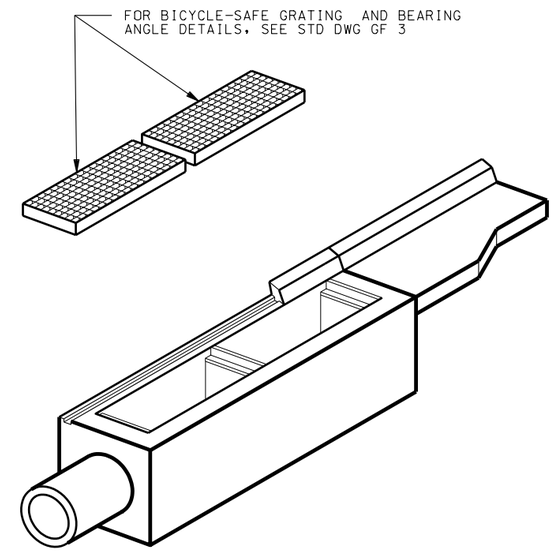

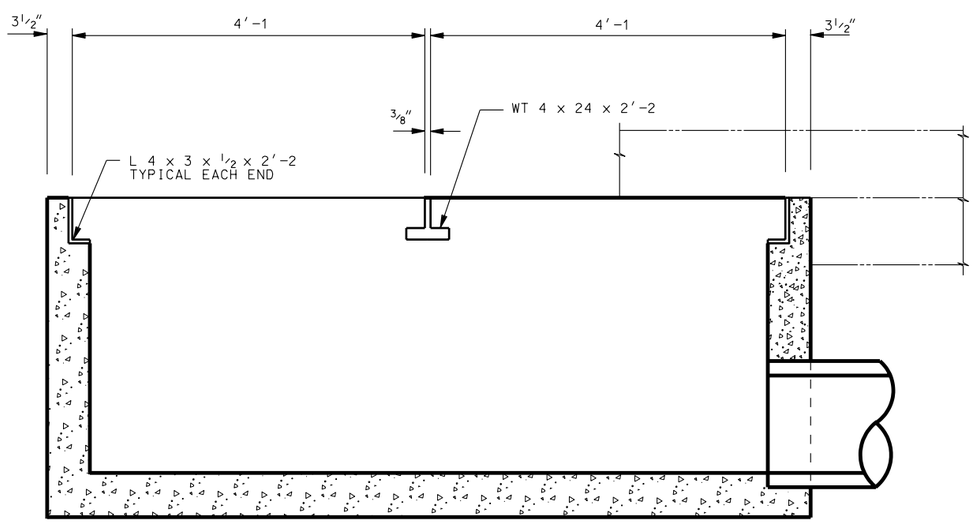

SECTION A-A

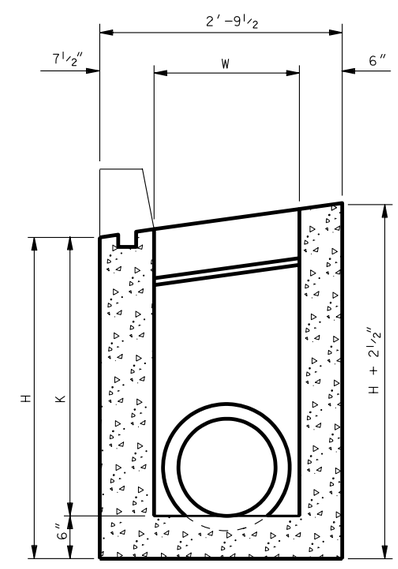

SECTION B-B

GENERAL NOTES FOR CB 8A TO CB 8B

1. USE COATED DEFORMED BILLET REINFORCING STEEL BARS CONFORMING TO AASHTO M 284 OR M 111 AND M 31 GRADE 60 RESPECTIVELY.
2. CHAMFER ALL EXPOSED CONCRETE CORNERS 3/4″ EXCEPT WHERE NOTED OTHERWISE.
3. PROVIDE 2″ CONCRETE COVER TO REINFORCING STEEL EXCEPT WHERE NOTED OTHERWISE.
4. USE STRUCTURAL CONCRETE FOR ALL CAST-IN-PLACE CONCRETE EXCEPT WHERE SPECIFIED OTHERWISE.
5. USE TYPE II CEMENT (LOW ALKALI) .
6. USE STRUCTURAL STEEL CONFORMING TO AASHTO M 270 GRADE 36 EXCEPT WHERE NOTED OTHERWISE.
7. SEE ROADWAY PLANS FOR LOCATION, SIZE AND PAYMENT OF PIPES.
8. HOT-DIP GALVANIZE GRATING AND BEARING ANGLES AFTER FABRICATION IN ACCORDANCE WITH AASHTO DESIGNATION M 111 (ASTM A 123).
9. USE CLASS AA(AE) CAST-IN-PLACE CONCRERE EXCEPT WHERE SPECIFIED OTHERWISE.

DESIGN DATA

HS 20-44 OR INTERSTATE ALTERNATE MILITARY LOADING IN ACCORDANCE WITH CURRENT AASHTO AND INTERIM SPECIFICATIONS.

STRUCTURAL CONCRETE: Fc = 1400 psi :
Fs (REINF.) = 24,000 psi n = 8.

QUANTITIES

SEE STD DWG CB 8B SCHEDULE OF INSTALLATION

REVISIONS

NO.	DATE	APPR.	REMARKS

UTAH DEPARTMENT OF TRANSPORTATION
STANDARD DRAWINGS FOR ROAD AND BRIDGE CONSTRUCTION
SALT LAKE CITY, UTAH

RECOMMENDED FOR APPROVAL — JAN.01,2005 DATE
CHAIRMAN STANDARDS COMMITTEE APPROVED — JAN.01,2005 DATE
DEPUTY DIRECTOR

DOUBLE CATCH BASIN

STANDARD DRAWING TITLE

STD DWG
CB 8A

DGN File:N:\Esa\Standard_Drawings\Imperial\2005Approved\Catch Basins and Cleanouts (CB)\cb08adgn
15-DEC-2004

SCHEDULE OF INSTALLATION

LINE NO	DIMENSIONS				MAXIMUM PIPE DIA.		REINFORCING STEEL												QUANTITIES		
							A		B		C		D		E		F		REINFORCING STEEL	CONCRETE	STRUCTURAL STEEL
	H	W	L	K	R.C.P.	C.M.P.	N	LENGTH	N	LENGTH	N	LENGTH	N	LENGTH	N	LENGTH	N	LENGTH	LBS.	CUBIC YARD	LBS.
1	2'-0	1'-8	7'-9⅜	1'-6	----	15"	7	8'-6	13	2'-5	9	1'-9	2	1'-8	9	2'-0	1	11'-0	145.0	1.14	594.0
2	2'-6	1'-8	7'-9⅜	2'-0	12"	18"	9	8'-6	15	2'-5	9	2'-3	2	2'-2	9	2'-6	1	11'-0	178.2	1.33	594.0
3	3'-0	1'-8	7'-9⅜	2'-6	15"	18"	9	8'-6	15	2'-5	9	2'-9	2	2'-8	9	3'-0	1	11'-0	188.6	1.52	594.0
4	3'-6	1'-8	7'-9⅜	3'-0	18"	18"	11	8'-6	17	2'-5	9	3'-3	2	3'-2	9	3'-6	1	11'-0	221.8	1.71	594.0
5	4'-0	1'-8	7'-9⅜	3'-6	18"	18"	11	8'-6	17	2'-5	9	3'-9	2	3'-8	9	4'-0	1	11'-0	232.2	1.90	594.0

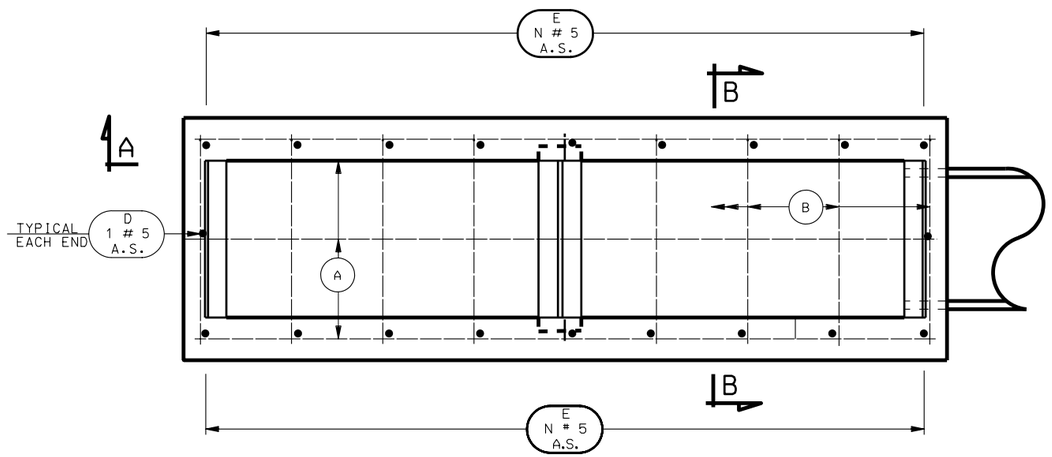

PLAN VIEW

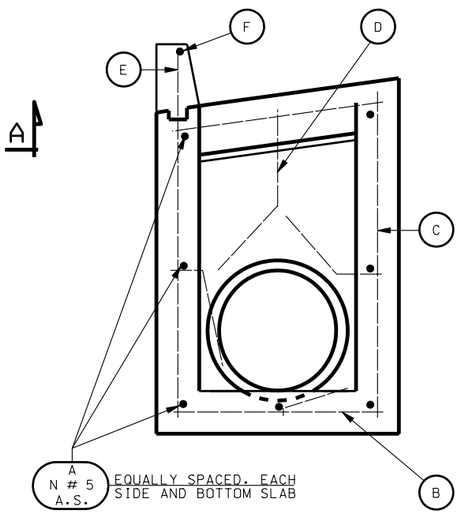

SECTION B-B

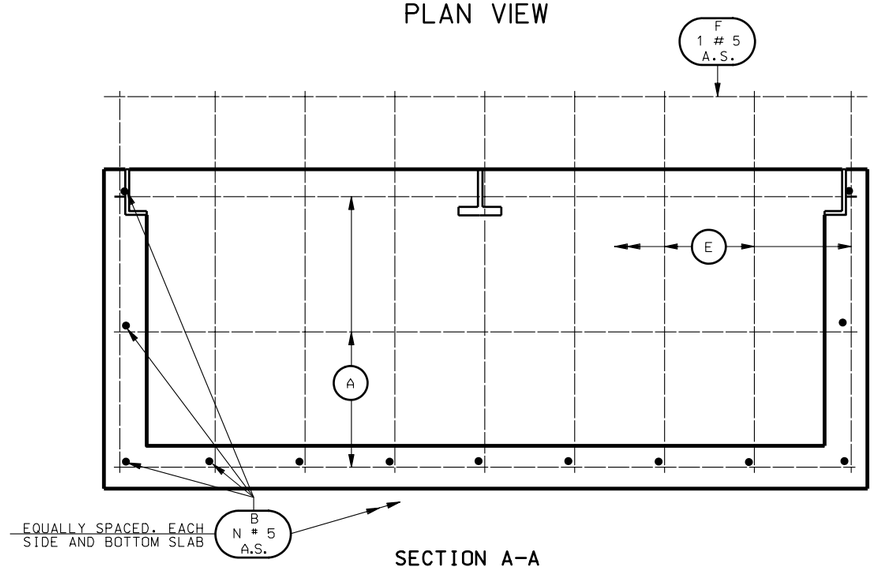

SECTION A-A

TABLE "A"			
R.C.P.		C.M.P.	
DIA.	CU. YDS.	DIA.	CU. YDS.
12"	0.023	12"	0.015
15"	0.031	15"	0.023
18"	0.041	18"	0.033

NOTES:

1. INCLUDE CONCRETE QUANTITIES FOR CURB AND GUTTER IN ROADWAY QUANTITIES.
2. DEDUCT CONCRETE DISPLACED BY PIPE(S), TABLE "A", FROM CONCRETE QUANTITIES GIVEN IN SCHEDULE OF INSTALLATION.
3. CUT AND BEND REINFORCING STEEL AS NECESSARY TO CLEAR PIPE(S) AND MAINTAIN 2" CLEARANCE.

REVISIONS

NO.	DATE	APPR.	REMARKS

UTAH DEPARTMENT OF TRANSPORTATION
STANDARD DRAWINGS FOR ROAD AND BRIDGE CONSTRUCTION
SALT LAKE CITY, UTAH

RECOMMENDED FOR APPROVAL — JAN.01,2005 DATE
CHAIRMAN STANDARDS COMMITTEE APPROVED — JAN.01,2005 DATE
DEPUTY DIRECTOR

DOUBLE CATCH BASIN

STANDARD DRAWING TITLE

STD DWG
CB 8B

DGN File:N:\Esd\Standard Drawings\Imperial\2005Approved\Catch Basins and Cleanouts (CB)\cb08b.dgn
15-DEC-2004

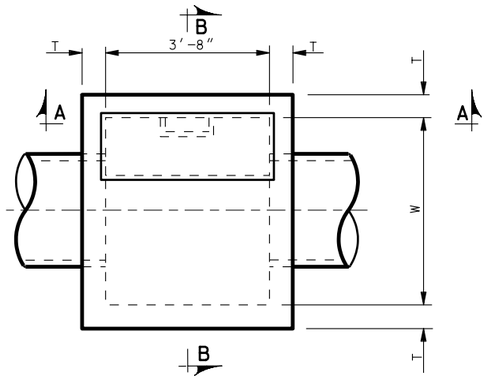

PLAN

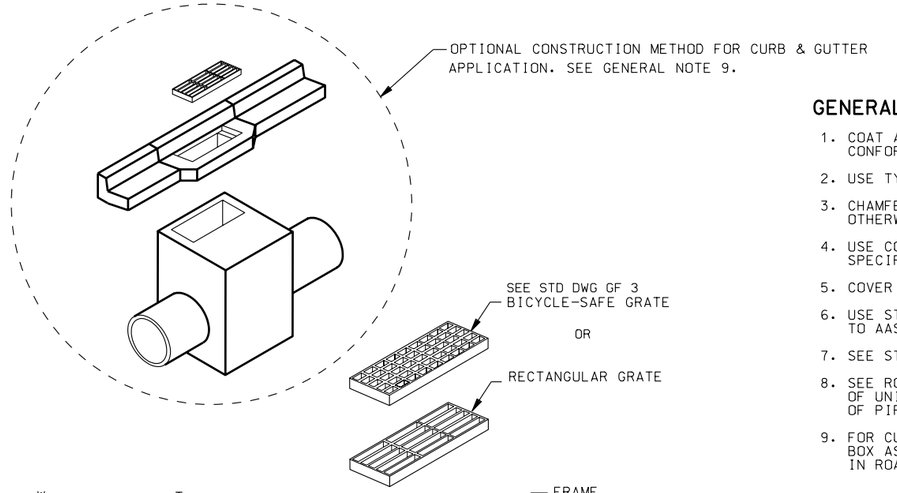

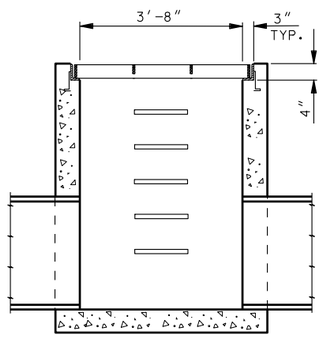

SECTION A-A

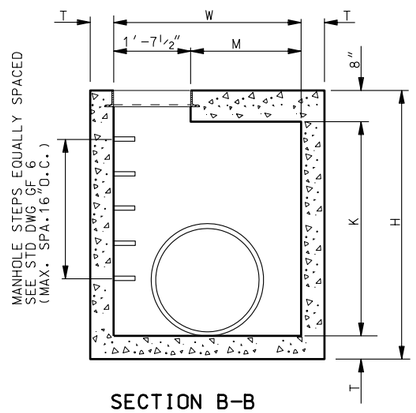

SECTION B-B

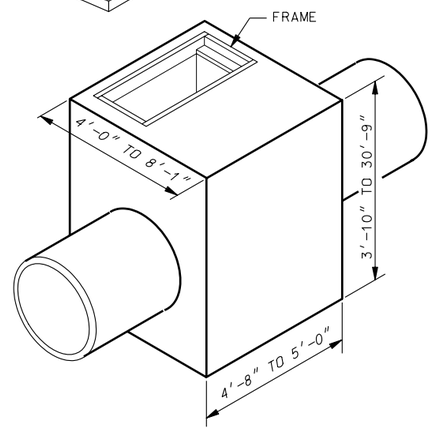

CATCH BASIN

GRATE AND FRAME APPLICATION

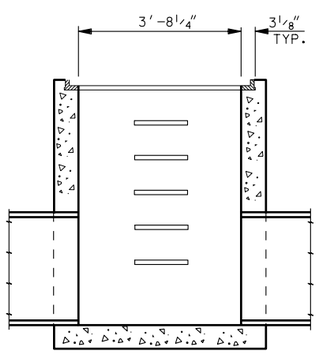

SECTION A-A

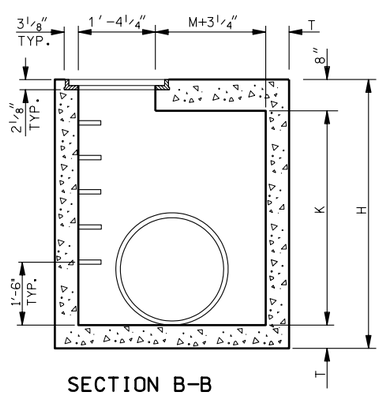

SECTION B-B

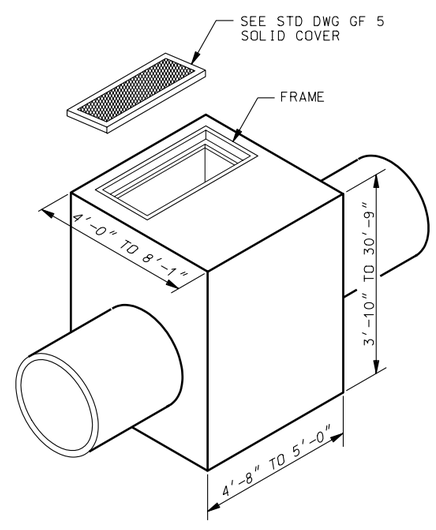

CLEANOUT BOX

SOLID COVER APPLICATION

GENERAL NOTES FOR CB 9A TO CB 9D

1. COAT ALL REINFORCING STEEL, DEFORMED BILLET-STEEL BARS CONFORMING TO AASHTO DESIGNATION M 31, GRADE 60.
2. USE TYPE II CEMENT (LOW ALKALI) UNLESS SPECIFIED OTHERWISE.
3. CHAMFER ¾" ALL EXPOSED CONCRETE CORNERS EXCEPT WHERE NOTED OTHERWISE.
4. USE CONCRETE CLASS AA(AE) FOR ALL CAST-IN-PLACE CONCRETE EXCEPT WHERE SPECIFIED OTHERWISE.
5. COVER TO REINFORCING 2" : EXCEPT WHERE NOTED OTHERWISE.
6. USE STRUCTURAL CARBON STEEL FOR STRUCTURAL STEEL GRATING CONFORMING TO AASHTO DESIGNATION M 270, GRADE 36 (ASTM A 709, GRADE 36)
7. SEE STD DWG GF 3 AND GF 5 FOR GRATING, FRAME AND SOLID COVER DETAILS.
8. SEE ROADWAY PLANS FOR DETAILS OF INSTALLATION, INCLUDING LOCATION OF UNITS, NUMBER OF UNITS REQUIRED, TYPE OF UNITS, SIZE AND LOCATION OF PIPE(S).
9. FOR CURB & GUTTER APPLICATIONS ADJUST FINISH GRADE ELEVATION OF BOX AS REQUIRED. INCLUDE CONCRETE QUANTITIES FOR CURB & GUTTER IN ROADWAY QUANTITIES.

DESIGN DATA

MS 18 (HS-20) OR INTERSTATE ALTERNATE LOADING IN ACCORDANCE WITH CURRENT AASHTO AND INTERIM SPECIFICATIONS.

CAST-IN-PLACE STRUCTURAL CONCRETE: fc = 1,400 psi, n = 8
REINF. STEEL: fc = 24,000 psi
STRUCTURAL STEEL: fs = 20,000 psi

QUANTITIES

STRUCTURAL CONCRETE
REINFORCING STEEL
— SEE SCHEDULE OF INSTALLATION

INDEX OF SHEETS

A- SITUATION & LAYOUT
B- SECTION DETAILS
C- SCHEDULE OF INSTALLATION FOR 18"-42" RCP. 12"-48" CMP.
D- SCHEDULE OF INSTALLATION FOR 48"-66" RCP. 60"-78" CMP.

REVISIONS

NO.	DATE	APPR.	REMARKS

UTAH DEPARTMENT OF TRANSPORTATION
STANDARD DRAWINGS FOR ROAD AND BRIDGE CONSTRUCTION
SALT LAKE CITY, UTAH

RECOMMENDED FOR APPROVAL — JAN.01,2005 DATE
CHAIRMAN STANDARDS COMMITTEE APPROVED — JAN.01,2005 DATE
DEPUTY DIRECTOR

STANDARD CATCH BASIN AND CLEANOUT BOX SITUATUON AND LAYOUT

STANDARD DRAWING TITLE

STD DWG
CB 9A

DGN File:N:\Esa\Standard_Drawings\Imperial\2005Approved\Catch Basins and Cleanouts (CB)\cb09a.dgn
15-DEC-2004

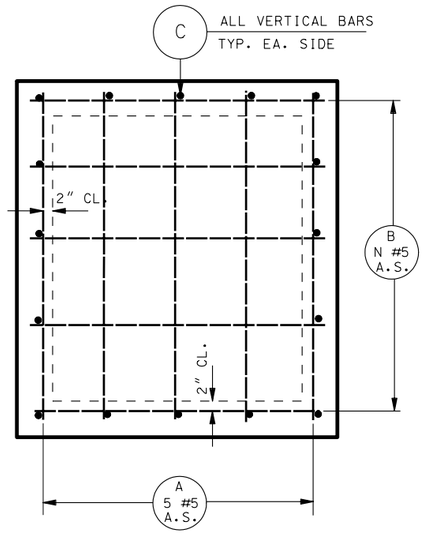

PLAN BOTTOM SLAB

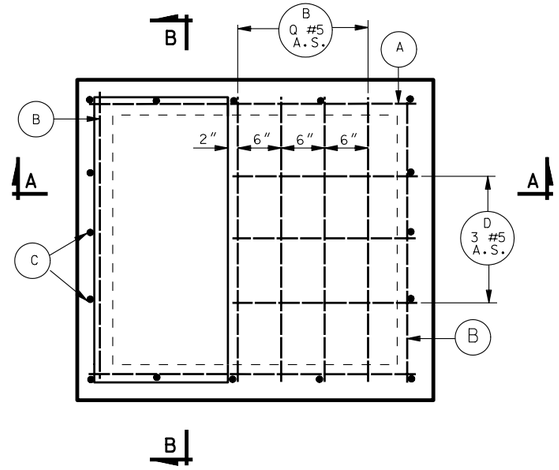

PLAN TOP SLAB

NOTES

1. FORM THE BOTTOM SLAB OF THE BOX TO FIT THE INVERT OF THE PIPE(S) WHEN SO REQUIRED ACCORDING TO THE DETAIL SHOWN ON THIS SHEET. SEE TABLE 3 ON STD DWG 9C AND CB 9D FOR ADDITIONAL CONCRETE QUANTITIES.
2. DEDUCT CONCRETE DISPLACED BY PIPE(S) FROM THOSE CONCRETE QUANTITIES GIVEN IN SCHEDULE OF INSTALLATION TABLE 1 ON STD DWG CB 9C AND CB 9D.
3. WHEN FORMED INVERT IS REQUIRED, SEE TABLE 3 ON STD DWG CB 3 AND CB 4 FOR ADDITIONAL CONCRETE QUANTITIES.
4. FIELD CUT AND BEND REINFORCING STEEL AS NECESSARY TO CLEAR PIPE(S) AND MAINTAIN 2 INCHES MINIMUM CLEARANCE.
5. UNLESS OTHERWISE SHOWN, ALL DIMENSIONS ARE OUT TO OUT OF BARS.
6. WEIGHT QUANTITIES FOR GRATE AND FRAME AND SOLID COVER AND ARE SHOWN FOR INFORMATION ONLY.
7. SEE STD DWG CB 9 FOR DIMENSIONS.
8. PIPE DIAMETERS SHOWN IN TABLES AND SCHEDULE ARE INSIDE DIAMETERS.
9. MAXIMUM PIPE DIMENSIONS SHOWN IN SCHEDULE IN INSTALLATION ARE FOR PIPES PERPENDICULAR TO WALLS OF BOX, DETERMINE CLEARANCES FOR SKEWED PIPES.
10. SEE STD DWG GF 6 FOR MANHOLE STEP DETAILS.
11. ALL REINFORCING BARS TO BE #5 BARS @ 12" UNLESS OTHERWISE SHOWN.
12. WHEN SOLID COVER IS REQUIRED ADD 0.023 CU.YDS. CONCRETE TO THOSE QUANTITIES GIVEN IN SCHEDULE OF INSTALLATION AND 3" TO EACH D-BAR, AND 1.0 LB. TO REINFORCING STEEL QUANTITIES.

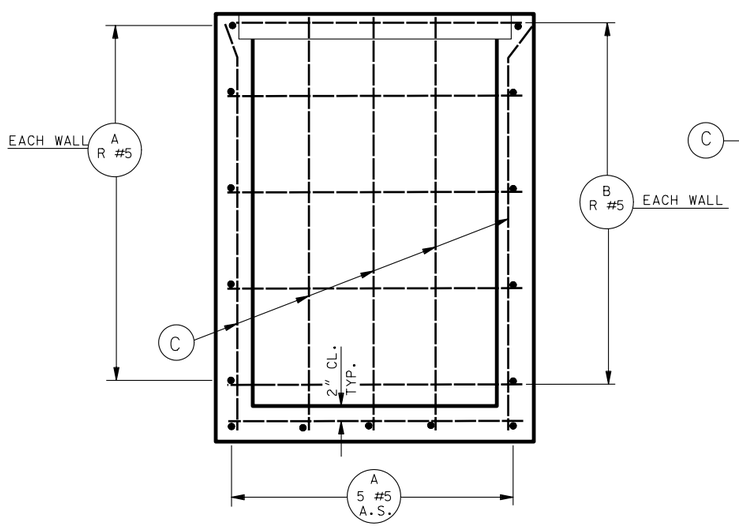

SECTION B-B

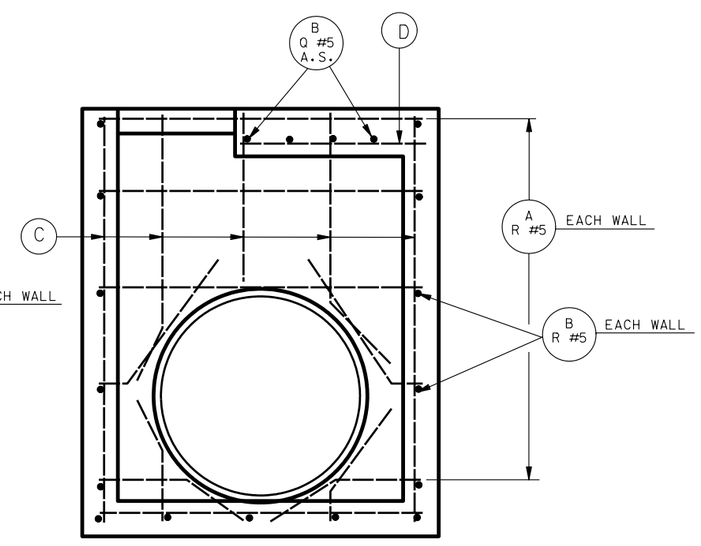

SECTION A-A

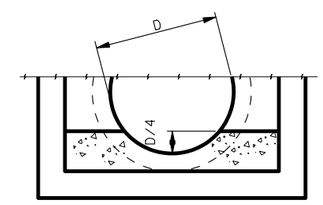

FORMED INVERT

NO.	DATE	APPR.	REMARKS

REVISIONS

UTAH DEPARTMENT OF TRANSPORTATION
STANDARD DRAWINGS FOR ROAD AND BRIDGE CONSTRUCTION
SALT LAKE CITY, UTAH

RECOMMENDED FOR APPROVAL — JAN.01,2005 DATE
CHAIRMAN STANDARDS COMMITTEE APPROVED — JAN.01,2005 DATE
DEPUTY DIRECTOR

STANDARD CATCH BASIN AND CLEANOUT BOX SECTION DETAILS

STANDARD DRAWING TITLE

STD DWG
CB 9B

DGN File:N:\Esa\Standard.Drawings\Imperial\2005Approved\Catch Basins and Cleanouts (CB)\cb09b.dgn
15-DEC-2004

LINE	NO. of MANHOLE STEPS	R	COLUMN "A" DIMENSIONS H	K	T	REINFORCING STEEL A LENGTH	A NO	B LENGTH	B NO	C NO.=16 LENGTH	D NO.=3 LENGTH	QUANTITIES CONC. yd^3	REINF. STEEL lbs
1	--	4	3'-10	2'-8	6"	3'-8	13	4'-4	16	3'-5	1'-6	1.41	184
2	2	4	4'-4	3'-2			13		16	3'-11		1.55	192
3	2	5	4'-10	3'-8			15		18	4'-5		1.69	217
4	3	5	5'-4	4'-2			15		18	4'-11		1.83	225
5	3	6	5'-10	4'-8			17		20	5'-5		1.98	250
6	4	6	6'-4	5'-2			17		20	5'-11		2.12	259
7	4	7	6'-10	5'-8			19		22	6'-5		2.26	284
8	5	7	7'-4	6'-2			19		22	6'-11		2.40	292
9	5	8	7'-10	6'-8			21		24	7'-5		2.54	317
10	6	8	8'-4	7'-2			21		24	7'-11		2.69	326
11	6	9	8'-10	7'-8			23		26	8'-5		2.83	351
12	7	9	9'-4	8'-2			23		26	8'-11		2.97	359
13	7	10	9'-10	8'-8			25		28	9'-5		3.11	384
14	8	10	10'-4	9'-2			25		28	9'-11		3.25	392
15	8	11	10'-10	9'-8			27		30	10'-5		3.40	417
16	9	11	11'-4	10'-2			27		30	10'-11		3.54	426
17	9	12	11'-10	10'-8			29		32	11'-5		3.68	451
18	10	12	12'-4	11'-2	6"	3'-8	29	4'-4	32	11'-11	1'-6	3.82	459
19	10	13	12'-11	11'-8	7"	3'-10	31	4'-6	34	12'-6	1'-7	4.72	497
20	11	13	13'-5	12'-2			31		34	13'-0		4.89	505
21	11	14	13'-11	12'-8			33		36	13'-6		5.06	531
22	12	14	14'-5	13'-2			33		36	14'-0		5.23	539
23	12	15	14'-11	13'-8			35		38	14'-6		5.40	565
24	13	15	15'-5	14'-2			35		38	15'-0		5.57	574
25	13	16	15'-11	14'-8			37		40	15'-6		5.74	599
26	14	16	16'-5	15'-2			37		40	16'-0		5.91	608
27	14	17	16'-11	15'-8			39		42	16'-6		6.08	633
28	15	17	17'-5	16'-2			39		42	17'-0		6.25	642
29	15	18	17'-11	16'-8			41		44	17'-6		6.42	667
30	16	18	18'-5	17'-2			41		44	18'-0		6.59	676
31	16	19	18'-11	17'-8			43		46	18'-6		6.76	702
32	17	19	19'-5	18'-2			43		46	19'-0		6.92	710
33	17	20	19'-11	18'-8			45		48	19'-6		7.09	736
34	18	20	20'-5	19'-2			45		48	20'-0		7.26	744
35	18	21	20'-11	19'-8			47		50	20'-6		7.43	770
36	19	21	21'-5	20'-2			47		50	21'-0		7.60	778
37	19	22	21'-11	20'-8			49		52	21'-6		7.77	804
38	20	22	22'-5	21'-2	7"	3'-10	49	4'-6	52	22'-0	1'-7	7.94	812
39	20	23	23'-0	21'-8	8"	4'-0	51	4'-8	54	22'-7	1'-8	9.47	858
40	21	23	23'-6	22'-2			51		54	23'-1		9.67	866
41	21	24	24'-0	22'-8			53		56	23'-7		9.87	892
42	22	24	24'-6	23'-2			53		56	24'-1		10.07	901
43	22	25	25'-0	23'-8			55		58	24'-7		10.26	927
44	23	25	25'-6	24'-2			55		58	25'-1		10.46	936
45	23	26	26'-0	24'-8			57		60	25'-7		10.66	962
46	24	26	26'-6	25'-2			57		60	26'-1		10.86	970
47	24	27	27'-0	25'-8			59		62	26'-7		11.05	997
48	25	27	27'-6	26'-2			59		62	27'-1		11.25	1005
49	25	28	28'-0	26'-8			61		64	27'-7		11.45	1031
50	26	28	28'-6	27'-2			61		64	28'-1		11.65	1040
51	26	29	29'-0	27'-8			63		66	28'-7		11.84	1066
52	27	29	29'-6	28'-2			63		66	29'-1		12.04	1075
53	27	30	30'-0	28'-8			65		68	29'-7		12.24	1101
54	28	30	30'-6	29'-2	8"	4'-0	65	4'-8	68	30'-1	1'-8	12.44	1109
			W=3'-0, M=1'-4½									N=5, Q=3	

LINE	COLUMN "B" DIMENSIONS H	K	T	REINFORCING STEEL A LENGTH	A NO	B LENGTH	B NO	C NO.=16 LENGTH	D NO.=3 LENGTH	QUANTITIES CONC. yd^3	REINF. STEEL lbs
1	----	----	---	----	--	----	--	----	---	----	----
2	4'-5	3'-3	6"	4'-2	13	4'-4	17	4'-0	2'-0	1.73	206
3	4'-11	3'-9			15		19	4'-6		1.88	232
4	5'-5	4'-3			15		19	5'-0		2.03	241
5	5'-11	4'-9			17		21	5'-6		2.19	266
6	6'-5	5'-3			17		21	6'-0		2.34	275
7	6'-11	5'-9			19		23	6'-6		2.49	303
8	7'-5	6'-3			19		23	7'-0		2.64	310
9	7'-11	6'-9			21		25	7'-6		2.79	336
10	8'-5	7'-3			21		25	8'-0		2.94	344
11	8'-11	7'-9			23		27	8'-6		3.09	370
12	9'-5	8'-3			23		27	9'-0		3.24	378
13	9'-11	8'-9			25		29	9'-6		3.39	405
14	10'-5	9'-3			25		29	10'-0		3.54	413
15	10'-11	9'-9			27		31	10'-6		3.70	439
16	11'-5	10'-3			27		31	11'-0		3.85	447
17	11'-11	10'-9			29		33	11'-6		4.00	473
18	12'-6	11'-3	6"	4'-2	29	4'-4	33	12'-0	2'-0	4.15	481
19	13'-0	11'-9	7"	4'-4	31	4'-6	35	12'-7	2'-1	5.12	521
20	13'-6	12'-3			31		35	13'-1		5.30	529
21	14'-0	12'-9			33		37	13'-7		5.48	556
22	14'-6	13'-3			33		37	14'-1		5.66	564
23	15'-0	13'-9			35		39	14'-7		5.84	591
24	15'-6	14'-3			35		39	15'-1		6.02	599
25	16'-0	14'-9			37		41	15'-7		6.20	626
26	16'-6	15'-3			37		41	16'-1		6.38	634
27	17'-0	15'-9			39		43	16'-7		6.56	661
28	17'-6	16'-3			39		43	17'-1		6.74	669
29	18'-0	16'-9			41		45	17'-7		6.92	696
30	18'-6	17'-3			41		45	18'-1		7.10	704
31	19'-0	17'-9			43		47	18'-7		7.28	731
32	19'-6	18'-3			43		47	19'-1		7.46	740
33	20'-0	18'-9			45		49	19'-7		7.64	766
34	20'-6	19'-3			45		49	20'-1		7.82	775
35	21'-0	19'-9			47		51	20'-7		8.10	801
36	21'-6	20'-3			47		51	21'-1		8.18	810
37	22'-0	20'-9			49		53	21'-7		8.36	837
38	22'-6	21'-3	7"	4'-4	49	4'-6	53	22'-1	2'-1	8.54	345
39	23'-1	21'-9	8"	4'-6	51	4'-8	55	22'-8	2'-2	10.17	892
40	23'-7	22'-3			51		55	23'-2		10.38	900
41	24'-1	22'-9			53		57	23'-8		10.59	928
42	24'-7	23'-3			53		57	24'-2		10.80	936
43	25'-1	23'-9			55		59	24'-8		11.01	963
44	25'-7	24'-3			55		59	25'-2		11.22	972
45	26'-1	24'-9			57		61	25'-8		11.43	1000
46	26'-7	25'-3			57		61	26'-2		11.64	1008
47	27'-1	25'-9			59		63	26'-8		11.85	1035
48	27'-7	26'-3			59		63	27'-2		12.06	1043
49	28'-1	26'-9			61		65	27'-8		12.27	1071
50	28'-7	27'-3			61		65	28'-2		12.48	1079
51	29'-1	27'-9			63		67	28'-8		12.69	1107
52	29'-7	28'-3			63		67	29'-2		12.90	1115
53	30'-1	28'-9			65		69	29'-8		13.11	1142
54	30'-7	29'-3	8"	4'-6	65	4'-8	69	30'-2	2'-2	13.32	1151
	W=3'-6, M=1'-10½									N=5, Q=4	

LINE	COLUMN "C" DIMENSIONS H	K	T	REINFORCING STEEL A LENGTH	A NO	B LENGTH	B NO	C NO.=18 LENGTH	D NO.=3 LENGTH	QUANTITIES CONC. yd^3	REINF. STEEL lbs
1	----	----	---	----	--	----	--	----	---	----	----
2	----	----	---	----	--	----	--	----	---	----	----
3	5'-0	3'-10	6"	4'-8	15	4'-4	21	4'-7	2'-6	2.08	262
4	5'-6	4'-4			15		21	5'-1		2.24	271
5	6'-0	4'-10			17		23	5'-7		2.40	299
6	6'-6	5'-4			17		23	6'-1		2.57	309
7	7'-0	5'-10			19		25	6'-7		2.73	337
8	7'-6	6'-4			19		25	7'-1		2.89	346
9	8'-0	6'-10			21		27	7'-7		3.05	374
10	8'-6	7'-4			21		27	8'-1		3.21	383
11	9'-0	7'-10			23		29	8'-7		3.37	412
12	9'-6	8'-4			23		29	9'-1		3.53	421
13	10'-0	8'-10			25		31	9'-7		3.69	449
14	10'-6	9'-4			25		31	10'-1		3.85	459
15	11'-0	9'-10			27		33	10'-7		4.01	487
16	11'-6	10'-4			27		33	11'-1		4.18	496
17	12'-0	10'-10			29		35	11'-7		4.34	524
18	12'-6	11'-4	6"	4'-8	29	4'-4	35	12'-1	2'-6	4.50	534
19	13'-1	11'-10	7"	4'-10	31	4'-6	37	12'-8	2'-7	5.52	576
20	13'-7	12'-4			31		37	13'-2		5.71	585
21	14'-1	12'-10			33		39	13'-8		5.90	613
22	14'-7	13'-4			33		39	14'-2		6.09	622
23	15'-1	13'-10			35		41	14'-8		6.28	651
24	15'-7	14'-4			35		41	15'-2		6.47	662
25	16'-1	14'-10			37		43	15'-8		6.66	691
26	16'-7	15'-4			37		43	16'-2		6.85	700
27	17'-1	15'-10			39		45	16'-8		7.04	729
28	17'-7	16'-4			39		45	17'-2		7.24	738
29	18'-1	16'-10			41		47	17'-8		7.43	767
30	18'-7	17'-4			41		47	18'-2		7.62	776
31	19'-1	17'-10			43		49	18'-8		7.81	805
32	19'-7	18'-4			43		49	19'-2		8.00	815
33	20'-1	18'-10			45		51	19'-8		8.19	844
34	20'-7	19'-4			45		51	20'-2		8.38	853
35	21'-1	19'-10			47		53	20'-8		8.57	882
36	21'-7	20'-4			47		53	21'-2		8.76	891
37	22'-1	20'-10			49		55	21'-8		8.95	920
38	22'-7	21'-4	7"	4'-10	49	4'-6	55	22'-2	2'-7	9.15	929
39	23'-2	21'-10	8"	5'-0	51	4'-8	57	22'-9	2'-8	10.86	979
40	23'-8	22'-4			51		57	23'-3		11.09	988
41	24'-2	22'-10			53		59	23'-9		11.31	1018
42	24'-8	23'-4			53		59	24'-3		11.53	1027
43	25'-2	23'-10			55		61	24'-9		11.75	1057
44	25'-8	24'-4			55		61	25'-3		11.97	1066
45	26'-2	24'-10			57		63	25'-9		12.20	1096
46	26'-8	25'-4			57		63	26'-3		12.42	1105
47	27'-2	25'-10			59		65	26'-9		12.64	1135
48	27'-8	26'-4			59		65	27'-3		12.86	1144
49	28'-2	26'-10			61		67	27'-9		13.08	1174
50	28'-8	27'-4			61		67	28'-3		13.31	1183
51	29'-2	27'-10			63		69	28'-9		13.53	1212
52	29'-8	28'-4			63		69	29'-3		13.75	1222
53	30'-2	28'-10			65		71	29'-9		13.97	1251
54	30'-8	29'-4	8"	5'-0	65	4'-8	71	30'-3	2'-8	14.19	1261
	W=4'-0, M=2'-4½									N=6, Q=5	

LINE	COLUMN "D" DIMENSIONS H	K	T	REINFORCING STEEL A LENGTH	A NO	B LENGTH	B NO	C NO.=18 LENGTH	D NO.=3 LENGTH	QUANTITIES CONC. yd^3	REINF. STEEL lbs	LINE
1	----	----	---	----	--	----	--	----	---	----	----	1
2	----	----	---	----	--	----	--	----	---	----	----	2
3	----	----	---	----	--	----	--	----	---	----	----	3
4	5'-7	4'-5	6"	5'-2	15	4'-4	22	5'-2	3'-0	2.45	287	4
5	6'-1	4'-11			17		24	5'-8		2.62	316	5
6	6'-7	5'-5			17		24	6'-2		2.79	325	6
7	7'-1	5'-11			19		26	6'-8		2.96	354	7
8	7'-7	6'-5			19		26	7'-2		3.13	364	8
9	8'-1	6'-11			21		28	7'-8		3.30	393	9
10	8'-7	7'-5			21		28	8'-2		3.47	402	10
11	9'-1	7'-11			23		30	8'-8		3.64	432	11
12	9'-7	8'-5			23		30	9'-2		3.81	441	12
13	10'-1	8'-11			25		32	9'-8		3.98	470	13
14	10'-7	9'-5			25		32	10'-2		4.15	480	14
15	11'-1	9'-11			27		34	10'-8		4.32	509	15
16	11'-7	10'-5			27		34	11'-2		4.49	518	16
17	12'-1	10'-11			29		36	11'-8		4.66	547	17
18	12'-7	11'-5	6"	5'-2	29	4'-4	36	12'-2	3'-0	4.83	557	18
19	13'-2	11'-11	7"	5'-4	31	4'-6	38	12'-9	3'-1	5.92	600	19
20	13'-8	12'-5			31		38	13'-3		6.12	609	20
21	14'-2	12'-11			33		40	13'-9		6.32	639	21
22	14'-8	13'-5			33		40	14'-3		6.52	648	22
23	15'-2	13'-11			35		42	14'-9		6.72	678	23
24	15'-8	14'-5			35		42	15'-3		6.93	688	24
25	16'-2	14'-11			37		44	15'-9		7.13	718	25
26	16'-8	15'-5			37		44	16'-3		7.33	727	26
27	17'-2	15'-11			39		46	16'-9		7.53	757	27
28	17'-8	16'-5			39		46	17'-3		7.74	766	28
29	18'-2	16'-11			41		48	17'-9		7.94	796	29
30	18'-8	17'-5			41		48	18'-3		8.14	806	30
31	19'-2	17'-11			43		50	18'-9		8.34	836	31
32	19'-8	18'-5			43		50	19'-3		8.53	845	32
33	20'-2	18'-11			45		52	19'-9		8.75	875	33
34	20'-8	19'-5			45		52	20'-3		8.95	884	34
35	21'-2	19'-11			47		54	20'-9		9.15	914	35
36	21'-8	20'-5			47		54	21'-3		9.35	923	36
37	22'-2	20'-11			49		56	21'-9		9.55	953	37
38	22'-8	21'-5	7"	5'-4	49	4'-6	56	22'-3	3'-1	9.76	962	38
39	23'-3	21'-11	8"	5'-6	51	4'-8	58	22'-10	3'-2	11.57	1013	39
40	23'-8	22'-5			51		58	23'-4		11.80	1023	40
41	24'-3	22'-11			53		60	23'-10		12.04	1053	41
42	24'-9	23'-5			53		60	24'-4		12.27	1063	42
43	25'-3	23'-11			55		62	24'-10		12.51	1093	43
44	25'-9	24'-5			55		62	25'-4		12.74	1103	44
45	26'-3	24'-11			57		64	25'-10		12.98	1133	45
46	26'-9	25'-5			57		64	26'-4		13.21	1143	46
47	27'-3	25'-11			59		66	26'-10		13.45	1173	47
48	27'-9	26'-5			59		66	27'-4		13.68	1183	48
49	28'-3	26'-11			61		68	27'-10		13.92	1213	49
50	28'-9	27'-5			61		68	28'-4		14.15	1223	50
51	29'-3	27'-11			63		70	28'-10		14.39	1253	51
52	29'-9	28'-5			63		70	29'-4		14.62	1263	52
53	30'-3	28'-11			65		72	29'-10		14.86	1293	53
54	30'-9	29'-5	8"	5'-6	65	4'-8	72	30'-4	3'-2	15.09	1303	54
	W=4'-6, M=2'-10½									N=6, Q=6		

TABLE 1 : CONCRETE DISPLACED BY PIPES

PIPE SIZES RCP	CMP	T= 6" yd^3	T= 7" yd^3	T= 8" yd^3
	12"	0.015	0.017	0.019
	18"	0.033	0.038	0.044
18"	24"	0.058	0.068	0.078
24"	30"	0.091	0.106	0.121
30"	36"	0.131	0.153	0.174
36"	42"	0.178	0.208	0.237
42"	48"	0.233	0.271	0.310

TABLE 2 : MAXIMUM PIPE SIZE TO BE USED

	RCP	CMP
COL. A	18"	12", 18", 24"
COL. B	30"	30", 36"
COL. C	36"	42"
COL. D	42"	48"

TABLE 3 : CONCRETE NEEDED FOR FORMED INVERT. (SEE SHEET 2)

PIPE SIZES	12"	18"	24"	30"	36"	42"	48"
RCP (yd^3)	-----	0.191	0.222	0.286	0.378	0.483	-----
CMP (yd^3)	0.081	0.106	0.120	0.124	0.169	0.220	0.277

STRUCTURAL STEEL :

RECTANGULAR GRATE & FRAME = 340 lbs
BICYCLE-SAFE GRATE & FRAME = 365 lbs
SOLID COVER & FRAME = 474 lbs

REVISIONS

NO.	DATE	APPR.	REMARKS

UTAH DEPARTMENT OF TRANSPORTATION
STANDARD DRAWINGS FOR ROAD AND BRIDGE CONSTRUCTION
SALT LAKE CITY, UTAH

RECOMMENDED FOR APPROVAL — JAN.01,2005 DATE
CHAIRMAN STANDARDS COMMITTEE
APPROVED — JAN.01,2005 DATE
DEPUTY DIRECTOR

STANDARD CATCH BASIN AND CLEANOUT BOX
SCHEDULE OF INSTALLATION
18" TO 42" RCP
12" TO 48" CMP
STANDARD DRAWING TITLE

STD DWG
CB 9C

DGN File: N:\Eng\Standard.Drawings\Imperial\2005Approved\Catch Basins and Cleanouts (CB)\cb09cudgn
15-DEC-2004

LINE	NO. of MANHOLE STEPS	R	COLUMN "E" DIMENSIONS H	K	T	REINFORCING STEEL A LENGTH	NO	B LENGTH	NO	C NO.=20 LENGTH	D NO.=3 LENGTH	QUANTITIES CONC. yd³	REINF. STEEL lbs
1	4	6	* 6'-4	5'-2	6"	5'-11	17	4'-4	26	5'-11	3'-9	3.00	358
2	4	7	6'-10	5'-8			19		28	6'-5		3.18	389
3	5	7	7'-4	6'-2			19		28	6'-11		3.37	400
4	5	8	7'-10	6'-8			21		30	7'-5		3.55	432
5	6	8	8'-4	7'-2			21		30	7'-11		3.74	442
6	6	9	8'-10	7'-8			23		32	8'-5		3.92	474
7	7	9	9'-4	8'-2			23		32	8'-11		4.10	484
8	7	10	9'-10	8'-8			25		34	9'-5		4.29	516
9	8	10	10'-4	9'-2			25		34	9'-11		4.47	527
10	8	11	10'-10	9'-8			27		36	10'-5		4.65	558
11	9	11	11'-4	10'-2			27		36	10'-11		4.84	569
12	9	12	11'-10	10'-8			29		38	11'-5		5.02	601
13	10	12	12'-4	11'-2	6"	5'-11	29	4'-4	38	11'-11	3'-9	5.20	611
14	10	13	12'-11	11'-8	7"	6'-1	31	4'-6	40	12'-6	3'-10	6.36	657
15	11	13	13'-5	12'-2			31		40	13'-0		6.58	668
16	11	14	13'-11	12'-8			33		42	13'-6		6.80	700
17	12	14	14'-5	13'-2			33		42	14'-0		7.02	711
18	12	15	14'-11	13'-8			35		44	14'-6		7.23	743
19	13	15	15'-5	14'-2			35		44	15'-0		7.45	753
20	13	16	15'-11	14'-8			37		46	15'-6		7.67	786
21	14	16	16'-5	15'-2			37		46	16'-0		7.89	796
22	14	17	16'-11	15'-8			39		48	16'-6		8.11	829
23	15	17	17'-5	16'-2			39		48	17'-0		8.32	839
24	15	18	17'-11	16'-8			41		50	17'-6		8.54	872
25	16	18	18'-5	17'-2			41		50	18'-0		8.76	882
26	16	19	18'-11	17'-8			43		52	18'-6		8.98	915
27	17	19	19'-5	18'-2			43		52	19'-0		9.19	925
28	17	20	19'-11	18'-8			45		54	19'-6		9.41	958
29	18	20	20'-5	19'-2			45		54	20'-0		9.63	968
30	18	21	20'-11	19'-8			47		56	20'-6		9.85	1001
31	19	21	21'-5	20'-2			47		56	21'-0		10.07	1011
32	19	22	21'-11	20'-8			49		58	21'-6		10.28	1044
33	20	22	22'-5	21'-2	7"	6'-1	49	4'-6	58	22'-0	3'-10	10.50	1054
34	20	23	23'-0	21'-8	8"	6'-3	51	4'-8	60	22'-7	3'-11	12.44	1108
35	21	23	23'-6	22'-2			51		60	23'-1		12.69	1118
36	21	24	24'-0	22'-8			53		62	23'-7		12.94	1151
37	22	24	24'-6	23'-2			53		62	24'-1		13.19	1162
38	22	25	25'-0	23'-8			55		64	24'-7		13.45	1195
39	23	25	25'-6	24'-2			55		64	25'-1		13.70	1206
40	23	26	26'-0	24'-8			57		66	25'-7		13.95	1239
41	24	26	26'-6	25'-2			57		66	26'-1		14.21	1249
42	24	27	27'-0	25'-8			59		68	26'-7		14.46	1282
43	25	27	27'-6	26'-2			59		68	27'-1		14.71	1293
44	25	28	28'-0	26'-8			61		70	27'-7		14.97	1326
45	26	28	28'-6	27'-2			61		70	28'-1		15.22	1336
46	26	29	29'-0	27'-8			63		72	28'-7		15.47	1370
47	27	29	29'-6	28'-2			63		72	29'-1		15.73	1380
48	27	30	30'-0	28'-8			65		74	29'-7		15.98	1413
49	28	30	30'-6	29'-2	8"	6'-3	65	4'-8	74	30'-1	3'-11	16.23	1424

W=5'-3, M=3'-7½ N=7, Q=7

LINE	COLUMN "F" DIMENSIONS H	K	T	REINFORCING STEEL A LENGTH	NO	B LENGTH	NO	C NO.=20 LENGTH	D NO.=3 LENGTH	QUANTITIES CONC. yd³	REINF. STEEL lbs
1	* 6'-10	5'-8	6"	6'-5	19	4'-4	29	6'-5	4'-3	3.39	405
2	----	----	---	----	--	----	--	----	---	----	----
3	7'-4	6'-2		6'-11	19		29	6'-11		3.59	416
4	7'-10	6'-8			21		31	7'-5		3.78	449
5	8'-4	7'-2			21		31	7'-11		3.97	459
6	8'-10	7'-8			23		33	8'-5		4.16	492
7	9'-4	8'-2			23		33	8'-11		4.36	502
8	9'-10	8'-8			25		35	9'-5		4.55	535
9	10'-4	9'-2			25		35	9'-11		4.74	546
10	10'-10	9'-8			27		37	10'-5		4.93	579
11	11'-4	10'-2			27		37	10'-11		5.13	589
12	11'-10	10'-8			29		39	11'-5		5.32	622
13	12'-4	11'-2	6"	6'-5	29	4'-4	39	11'-11	4'-3	5.51	632
14	12'-11	11'-8	7"	6'-7	31	4'-6	41	12'-6	4'-4	6.73	680
15	13'-5	12'-2			31		41	13'-0		6.96	690
16	13'-11	12'-8			33		43	13'-6		7.18	724
17	14'-5	13'-2			33		43	14'-0		7.41	734
18	14'-11	13'-8			35		45	14'-6		7.64	768
19	15'-5	14'-2			35		45	15'-0		7.87	778
20	15'-11	14'-8			37		47	15'-6		8.10	812
21	16'-5	15'-2			37		47	16'-0		8.33	822
22	16'-11	15'-8			39		49	16'-6		8.56	856
23	17'-5	16'-2			39		49	17'-0		8.78	866
24	17'-11	16'-8			41		51	17'-6		9.01	900
25	18'-5	17'-2			41		51	18'-0		9.24	910
26	18'-11	17'-8			43		53	18'-6		9.47	943
27	19'-5	18'-2			43		53	19'-0		9.69	954
28	19'-11	18'-8			45		55	19'-6		9.93	987
29	20'-5	19'-2			45		55	20'-0		10.16	998
30	20'-11	19'-8			47		57	20'-6		10.39	1031
31	21'-5	20'-2			47		57	21'-0		10.61	1042
32	21'-11	20'-8			49		59	21'-6		10.84	1075
33	22'-5	21'-2	7"	6'-7	49	4'-6	59	22'-0	4'-4	11.07	1086
34	23'-0	21'-8	8"	6'-9	51	4'-8	61	22'-7	4'-5	13.09	1141
35	23'-6	22'-2			51		61	23'-1		13.36	1151
36	24'-0	22'-8			53		63	23'-7		13.63	1186
37	24'-6	23'-2			53		63	24'-1		13.89	1196
38	25'-0	23'-8			55		65	24'-7		14.16	1230
39	25'-6	24'-2			55		65	25'-1		14.42	1241
40	26'-0	24'-8			57		67	25'-7		14.69	1275
41	26'-6	25'-2			57		67	26'-1		14.95	1285
42	27'-0	25'-8			59		69	26'-7		15.22	1320
43	27'-6	26'-2			59		69	27'-1		15.48	1330
44	28'-0	26'-8			61		71	27'-7		15.75	1364
45	28'-6	27'-2			61		71	28'-1		16.01	1375
46	29'-0	27'-8			63		73	28'-7		16.28	1409
47	29'-6	28'-2			63		73	29'-1		16.55	1419
48	30'-0	28'-8			65		75	29'-7		16.81	1454
49	30'-6	29'-2	8"	6'-9	65	4'-8	75	30'-1	4'-5	17.08	1478

W=5'-9, M=4'-1½ N=7, Q=8

LINE	COLUMN "G" DIMENSIONS H	K	T	REINFORCING STEEL A LENGTH	NO	B LENGTH	NO	C NO.=22 LENGTH	D NO.=3 LENGTH	QUANTITIES CONC. yd³	REINF. STEEL lbs
1	----	----	---	----	--	----	--	----	---	----	----
2	----	----	---	----	--	----	--	----	---	----	----
3	* 7'-4	6'-2	6"	6'-11	19	4'-4	31	6'-11	4'-9	3.80	451
4	7'-10	6'-8			21		33	7'-5		4.00	486
5	8'-4	7'-2			21		33	7'-11		4.20	497
6	8'-10	7'-8			23		35	8'-5		4.40	532
7	9'-4	8'-2			23		35	8'-11		4.61	544
8	9'-10	8'-8			25		37	9'-5		4.81	579
9	10'-4	9'-2			25		37	9'-11		5.01	590
10	10'-10	9'-8			27		39	10'-5		5.21	625
11	11'-4	10'-2			27		39	10'-11		5.42	636
12	11'-10	10'-8			29		41	11'-5		5.62	671
13	12'-5	11'-2	6"	6'-11	29	4'-4	41	11'-11	4'-9	5.82	683
14	12'-11	11'-8	7"	7'-1	31	4'-6	43	12'-6	4'-10	7.09	733
15	13'-5	12'-2			31		43	13'-0		7.33	744
16	13'-11	12'-8			33		45	13'-6		7.57	780
17	14'-5	13'-2			33		45	14'-0		7.81	792
18	14'-11	13'-8			35		47	14'-6		8.05	827
19	15'-5	14'-2			35		47	15'-0		8.29	838
20	15'-11	14'-8			37		49	15'-6		8.53	874
21	16'-5	15'-2			37		49	16'-0		8.77	886
22	16'-11	15'-8			39		51	16'-6		9.01	921
23	17'-5	16'-2			39		51	17'-0		9.24	933
24	17'-11	16'-8			41		53	17'-6		9.48	968
25	18'-5	17'-2			41		53	18'-0		9.72	980
26	18'-11	17'-8			43		55	18'-6		9.96	1015
27	19'-5	18'-2			43		55	19'-0		10.20	1027
28	19'-11	18'-8			45		57	19'-6		10.44	1063
29	20'-5	19'-2			45		57	20'-0		10.68	1074
30	20'-11	19'-8			47		59	20'-6		10.92	1110
31	21'-5	20'-2			47		59	21'-0		11.16	1121
32	21'-11	20'-8			49		61	21'-6		11.40	1157
33	22'-5	21'-2	7"	7'-1	49	4'-6	61	22'-0	4'-10	11.64	1168
34	23'-0	21'-8	8"	7'-3	51	4'-8	63	22'-7	4'-11	13.75	1226
35	23'-6	22'-2			51		63	23'-1		14.03	1237
36	24'-0	22'-8			53		65	23'-7		14.31	1274
37	24'-6	23'-2			53		65	24'-1		14.58	1285
38	25'-0	23'-8			55		67	24'-7		14.86	1321
39	25'-6	24'-2			55		67	25'-1		15.14	1333
40	26'-0	24'-8			57		69	25'-7		15.42	1369
41	26'-6	25'-2			57		69	26'-1		15.70	1381
42	27'-0	25'-8			59		71	26'-7		15.97	1417
43	27'-6	26'-2			59		71	27'-1		16.25	1429
44	28'-0	26'-8			61		73	27'-7		16.53	1465
45	28'-6	27'-2			61		73	28'-1		16.81	1476
46	29'-0	27'-8			63		75	28'-7		17.08	1513
47	29'-6	28'-2			63		75	29'-1		17.36	1524
48	30'-0	28'-8			65		77	29'-7		17.64	1561
49	30'-6	29'-2	8"	7'-3	65	4'-8	77	30'-1	4'-11	17.92	1572

W=6'-3, M=4'-7½ N=8, Q=9

LINE	COLUMN "H" DIMENSIONS H	K	T	REINFORCING STEEL A LENGTH	NO	B LENGTH	NO	C NO.=22 LENGTH	D NO.=3 LENGTH	QUANTITIES CONC. yd³	REINF. STEEL lbs
1	----	----	---	----	--	----	--	----	---	----	----
2	----	----	---	----	--	----	--	----	---	----	----
3	----	----	---	----	--	----	--	----	---	----	----
4	* 8'-1	6'-11	6"	7'-5	21	4'-4	34	7'-8	5'-3	4.33	508
5	8'-7	7'-5			21		34	8'-2		4.54	520
6	9'-1	7'-11			23		36	8'-8		4.75	556
7	9'-7	8'-5			23		36	9'-2		4.96	567
8	10'-1	8'-11			25		38	9'-8		5.18	603
9	10'-7	9'-5			25		38	10'-2		5.39	615
10	11'-1	9'-11			27		40	10'-8		5.60	651
11	11'-7	10'-5			27		40	11'-2		5.81	662
12	12'-1	10'-11			29		42	11'-8		6.02	698
13	12'-7	11'-5	6"	7'-5	29	4'-4	42	12'-2	5'-3	6.23	710
14	13'-2	11'-11	7"	7'-7	31	4'-6	44	12'-9	5'-4	7.58	761
15	13'-8	12'-5			31		44	13'-3		7.83	772
16	14'-2	12'-11			33		46	13'-9		8.08	809
17	14'-8	13'-5			33		46	14'-3		8.33	821
18	15'-2	13'-11			35		48	14'-9		8.58	857
19	15'-8	14'-5			35		48	15'-3		8.83	869
20	16'-2	14'-11			37		50	15'-9		9.08	905
21	16'-8	15'-5			37		50	16'-3		9.33	917
22	17'-2	15'-11			39		52	16'-9		9.58	954
23	17'-8	16'-5			39		52	17'-3		9.83	965
24	18'-2	16'-11			41		54	17'-9		10.08	1002
25	18'-8	17'-5			41		54	18'-3		10.33	1013
26	19'-2	17'-11			43		56	18'-9		10.58	1050
27	19'-8	18'-5			43		56	19'-3		10.83	1061
28	20'-2	18'-11			45		58	19'-9		11.08	1098
29	20'-8	19'-5			45		58	20'-3		11.33	1109
30	21'-2	19'-11			47		60	20'-9		11.58	1146
31	21'-8	20'-5			47		60	21'-3		11.83	1158
32	22'-2	20'-11			49		62	21'-9		12.08	1194
33	22'-8	21'-5	7"	7'-7	49	4'-6	62	22'-3	5'-4	12.33	1206
34	23'-3	21'-11	8"	7'-9	51	4'-8	64	22'-10	5'-5	14.56	1264
35	23'-9	22'-5			51		64	23'-4		14.85	1276
36	24'-3	22'-11			53		66	23'-10		15.14	1313
37	24'-9	23'-5			53		66	24'-4		15.43	1325
38	25'-3	23'-11			55		68	24'-10		15.72	1362
39	25'-9	24'-5			55		68	25'-4		16.01	1374
40	26'-3	24'-11			57		70	25'-10		16.30	1411
41	26'-9	25'-5			57		70	26'-4		16.59	1423
42	27'-3	25'-11			59		72	26'-10		16.88	1460
43	27'-9	26'-5			59		72	27'-4		17.17	1471
44	28'-3	26'-11			61		74	27'-10		17.46	1509
45	28'-9	27'-5			61		74	28'-4		17.75	1520
46	29'-3	27'-11			63		76	28'-10		18.04	1558
47	29'-9	28'-5			63		76	29'-4		18.33	1569
48	30'-3	28'-11			65		78	29'-10		18.62	1607
49	30'-9	29'-5	8"	7'-9	65	4'-8	78	30'-4	5'-5	18.91	1618

W=6'-9, M=5'-1½ N=8, Q=10

NOTE: LINES MARKED WITH * REFER TO METAL PIPE ONLY.

TABLE 1 : CONCRETE DISPLACED BY PIPES

PIPE SIZES RCP	CMP	T= 6" yd³	T= 7" yd³	T= 8" yd³
48"	60"	0.340	0.396	0.453
54"	66"	0.427	0.498	0.569
60"	72"	0.524	0.611	0.698
66"	78"	0.630	0.735	0.840

TABLE 2 : MAXIMUM PIPE SIZE TO BE USED

	RCP	CMP
COL. E	48"	60"
COL. F	54"	66"
COL. G	60"	72"
COL. H	66"	78"

TABLE 3 : CONCRETE NEEDED FOR FORMED INVERT. (SEE SHEET 2)

PIPE SIZES	48"	54"	60"	66"	72"	78"
RCP (yd³)	0.676	0.814	0.964	1.126	----	----
CMP (yd³)	----	----	0.370	0.443	0.522	0.609

STRUCTURAL STEEL :

RECTANGULAR GRATE & FRAME = 340 lbs
BICYCLE-SAFE GRATE & FRAME = 365 lbs
SOLID COVER & FRAME = 474 lbs

REVISIONS

NO.	DATE	APPR.	REMARKS

UTAH DEPARTMENT OF TRANSPORTATION
STANDARD DRAWINGS FOR ROAD AND BRIDGE CONSTRUCTION
SALT LAKE CITY, UTAH

RECOMMENDED FOR APPROVAL — JAN.01,2005 DATE — DEPUTY DIRECTOR
CHAIRMAN STANDARDS COMMITTEE APPROVED — JAN.01,2005 DATE

STANDARD CATCH BASIN AND CLEANOUT BOX SCHEDULE OF INSTALLATION 48" TO 66" RCP 60" TO 78" CMP
STANDARD DRAWING TITLE

STD DWG
CB 9D

DGN File:N:\Esa\Standard_Drawings\Imperial\2005Approved\Catch Basins and Cleanouts (CB)\cb09d.dgn
15-DEC-2004

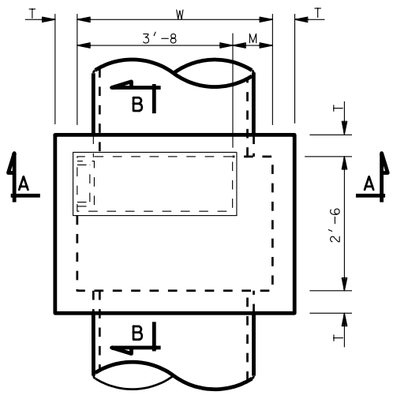

PLAN

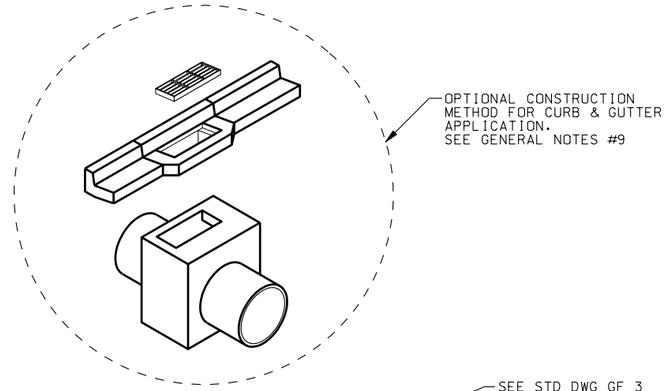

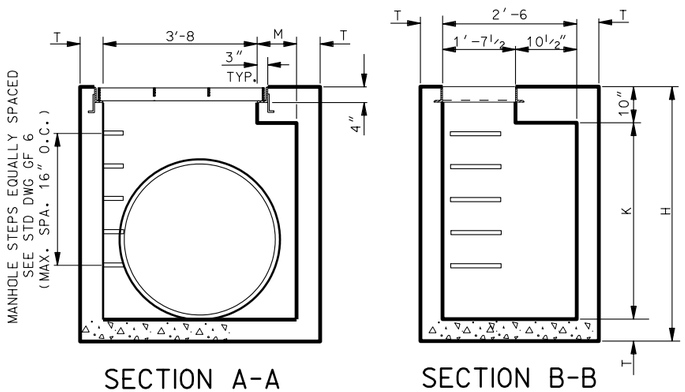

SECTION A-A

SECTION B-B

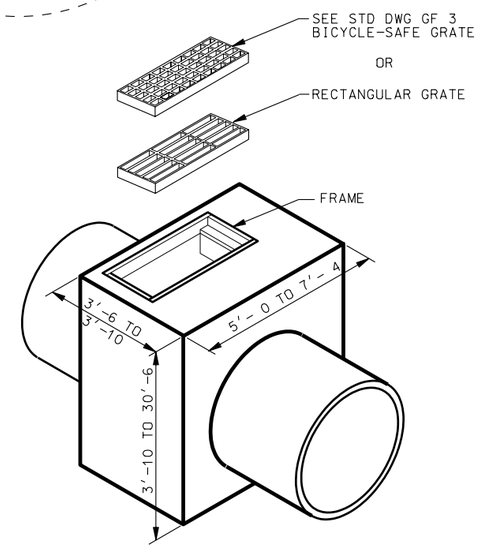

CATCH BASIN
GRATE AND FRAME APPLICATION

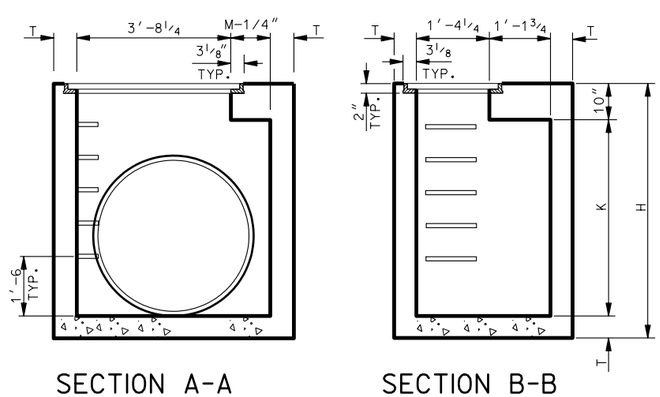

SECTION A-A

SECTION B-B

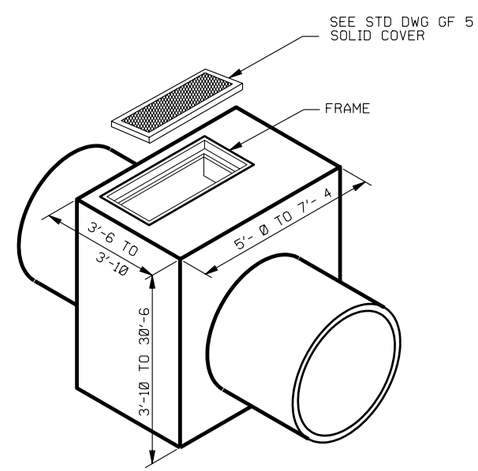

CLEANOUT BOX
SOLID COVER APPLICATION

GENERAL NOTES FOR CB 10A TO CB 10C

1. USE COATED DEFORMED BILLET REINFORCING STEEL BARS CONFORMING TO AASHTO M 284 OR M 111 AND M 31 GRADE 60 RESPECTIVELY.
2. USE TYPE II CEMENT (LOW ALKALI) UNLESS SPECIFIED OTHERWISE.
3. CHAMFER ALL EXPOSED CORNER ¾" EXCEPT WHERE NOTED OTHERWISE.
4. USE CONCRETE CLASS AA(AE) FOR ALL CAST-IN-PLACE CONCRETE EXCEPT WHERE SPECIFIED OTHERWISE.
5. PROVIDE 2" CONCRETE COVER TO REINFORCING STEEL EXCEPT WHERE NOTED OTHERWISE.
6. USE STRUCTURAL STEEL CONFORMING TO AASHTO M 270 GRADE 36 EXCEPT WHERE NOTED OTHERWISE.
7. SEE STD DWG GF 3 AND GF 5 FOR GRATING, FRAME AND SOLID COVER DETAILS.
8. SEE ROADWAY PLANS FOR DETAILS OF INSTALLATION, INCLUDING LOCATION OF UNITS NUMBER OF UNITS REQUIRED, TYPE OF UNITS, SIZE AND LOCATION OF PIPE(S).
9. FOR CURB & GUTTER APPLICATIONS ADJUST FINISH GRADE ELEVATION OF BOX AS REQUIRED. INCLUDE CONCRETE QUANTITIES FOR CURB & GUTTER IN ROADWAY QUANTITIES.
10. USE CLASS AA(AE) CAST-IN-PLACE CONCRETE EXCEPT WHERE SPECIFIED OTHERWISE.

DESIGN DATA

HS-20-44 OR INTERSTATE ALTERNATE MILITARY LOADING IN ACCORDANCE WITH CURRENT AASHTO AND INTERIM SPECIFICATIONS.

CAST-IN-PLACE STRUCTURAL CONCRETE: Fc = 1,400 psi n = 8
REINF. STEEL: Fs = 24,000 psi
STRUCTURAL STEEL: Fs = 20,000 psi

QUANTITIES

STRUCTURAL CONCRETE
REINFORCING STEEL
— SEE SCHEDULE OF INSTALLATION

INDEX OF SHEETS

(CB 10A) 1- SITUATION & LAYOUT
(CB 10B) 2- SECTION DETAILS
(CB 10C) 3- SCHEDULE OF INSTALLATION FOR 42"-60" RCP. 48"-72" CMP.

REVISIONS

NO.	DATE	APPR.	REMARKS

UTAH DEPARTMENT OF TRANSPORTATION
STANDARD DRAWINGS FOR ROAD AND BRIDGE CONSTRUCTION
SALT LAKE CITY, UTAH

RECOMMENDED FOR APPROVAL — JAN.01.2005 DATE
CHAIRMAN STANDARDS COMMITTEE APPROVED — JAN.01.2005 DATE
DEPUTY DIRECTOR

STANDARD CATCH BASIN AND CLEANOUT BOX SITUATION AND LAYOUT

STANDARD DRAWING TITLE

STD DWG
CB 10A

DGN File: N:\Esd\Standard_Drawings\Imperial\2005Approved\Catch Basins and Cleanouts (CB)\cb10a.dgn
15-DEC-2004

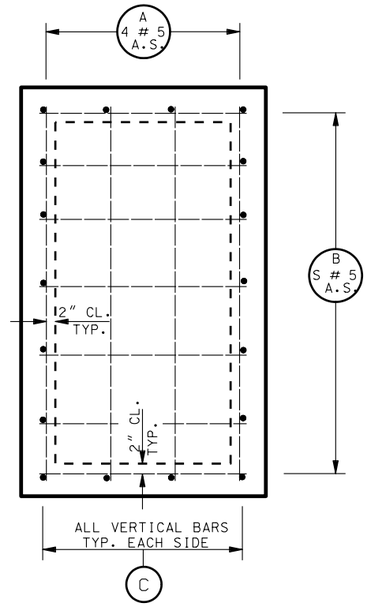

PLAN BOTTOM SLAB

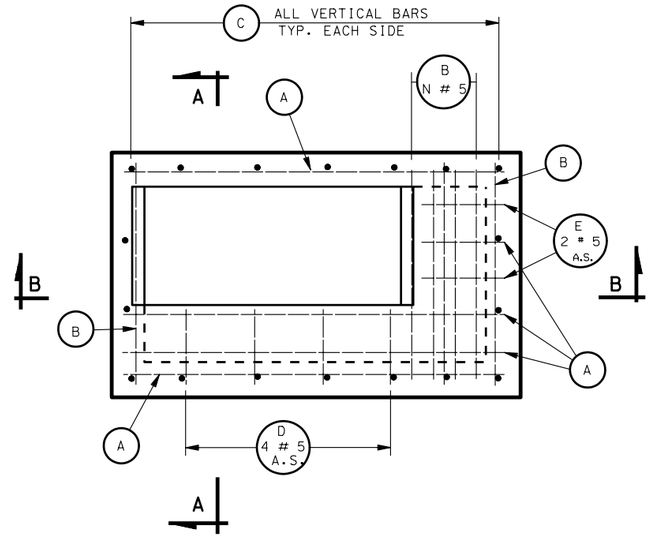

PLAN TOP SLAB

NOTES:

1. QUANTITIES SHOWN IN THE SCHEDULE OF INSTALLATION ARE FOR ONE UNIT ONLY.
2. FORM THE BOTTOM SLAB OF THE BOX TO FIT THE INVERT OF THE PIPE(S) WHEN SO REQUIRED ACCORDING TO THE DETAIL SHOWN ON THIS SHEET. SEE TABLE 3 ON STD DWG CB 10C FOR ADDITIONAL CONCRETE QUANTITIES.
3. DEDUCT CONCRETE DISPLACED BY PIPE(S) FROM THOSE CONCRETE QUANTITIES GIVEN IN SCHEDULE OF TABLE 1 ON STD DWG CB 10C.
4. WHEN FORMED INVERT IS REQUIRED, SEE TABLE 3 ON STD DWG CB 10C FOR ADDITIONAL CONCRETE QUANTITIES.
5. PROVIDE 2" CONCRETE COVER TO REINFORCING STEEL EXCEPT WHERE NOTED OTHERWISE.
6. UNLESS OTHERWISE SHOWN, ALL DIMENSIONS ARE OUT TO OUT OF BARS.
7. WEIGHT QUANTITIES FOR GRATE AND FRAME, AND SOLID COVER AND FRAME ARE SHOWN FOR INFORMATION ONLY.
8. SEE STD DWG CB 10A FOR DIMENSIONS.
9. PIPE DIAMETERS SHOWN IN TABLES AND SCHEDULE ARE INSIDE DIAMETERS.
10. MAXIMUM PIPE DIMENSIONS SHOWN IN SCHEDULE OF INSTALLATION ARE FOR PIPES PERPENDICULAR TO WALLS OF BOX. DETERMINE CLEARANCES FOR SKEWED PIPES.
11. SEE STD DWG GF 6 FOR MANHOLE STEP DETAILS.
12. USE #5 BARS FOR ALL REINFORCING @ 12" UNLESS OTHERWISE SHOWN.
13. WHEN SOLID COVER IS REQUIRED, ADD .023 CU.YDS. OF CONCRETE TO THOSE QUANTITIES GIVEN IN SCHEDULE OF INSTALLATION AND ADD 3" TO EACH D-BAR, AND 1.0 LB TO REINFORCING STEEL QUANTITIES.
14. USE COATED DEFORMED BILLET REINFORCING STEEL BARS CONFORMING TO AASHTO M 284, OR M 111 AND M 31 GRADE 60 RESPECTIVELY.
15. CHAMFER ALL EXPOSED CONCRETE CORNERS $^3/_4$" EXCEPT WHERE NOTED OTHERWISE.
16. USE CLASS AA(AE) CAST CONCRETE EXCEPT WHERE SPECIFIED OTHERWISE.

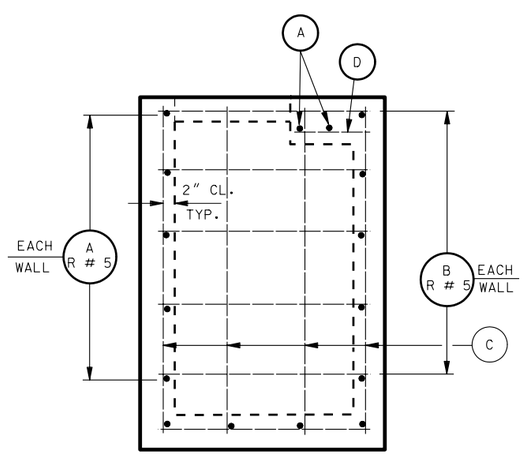

SECTION A-A

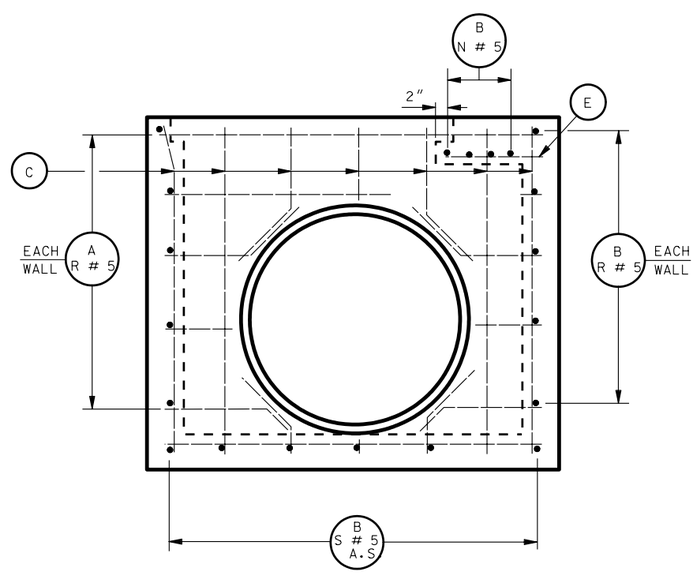

SECTION B-B

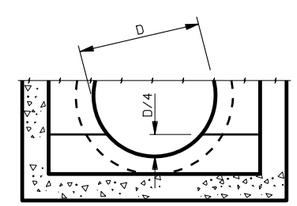

FORMED INVERT

REVISIONS				
NO.	DATE	APPR.		REMARKS

UTAH DEPARTMENT OF TRANSPORTATION
STANDARD DRAWINGS FOR ROAD AND BRIDGE CONSTRUCTION
SALT LAKE CITY, UTAH

RECOMMENDED FOR APPROVAL — JAN.01,2005 DATE
CHAIRMAN STANDARDS COMMITTEE APPROVED — JAN.01,2005 DATE
DEPUTY DIRECTOR

STANDARD CATCH BASIN AND CLEANOUT BOX SECTION DETAILS

STANDARD DRAWING TITLE

STD DWG
CB 10B

DGN File:N:\Esd\Standard Drawings\Imperial\2005Approved\Catch Basins and Cleanouts (CB)\cb10bu.dgn

15-DEC-2004

COLUMN "A"

LINE	NO. of MANHOLE STEPS	R	DIMENSIONS H	DIMENSIONS K	DIMENSIONS T	REINFORCING STEEL A LENGTH	A NO	B LENGTH	B NO	C NO.=16 LENGTH	D NO.=4 LENGTH	QUANTITIES CONC. CU. YD.	QUANTITIES REINF. STEEL LBS.
1	--	4	3'-10	2'-6	6"	4'-8	14	3'-2	15	3'-5	1'-0	1.365	179
2	2	4	4'-4	3'-0			14		15	3'-11		1.504	187
3	2	5	4'-10	3'-6			16		17	4'-5		1.642	212
4	3	5	5'-4	4'-0			16		17	4'-11		1.781	220
5	3	6	5'-10	4'-6			18		19	5'-5		1.920	245
6	4	6	6'-4	5'-0			18		19	5'-11		2.059	253
7	4	7	6'-10	5'-6			20		21	6'-5		2.198	278
8	5	7	7'-4	6'-0			20		21	6'-11		2.337	286
9	5	8	7'-10	6'-6			22		23	7'-5		2.476	311
10	6	8	8'-4	7'-0			22		23	7'-11		2.615	319
11	6	9	8'-10	7'-6			24		25	8'-5		2.754	344
12	7	9	9'-4	8'-0			24		25	8'-11		2.892	352
13	7	10	9'-10	8'-6			26		27	9'-5		3.031	377
14	8	10	10'-4	9'-0			26		27	9'-11		3.170	385
15	8	11	10'-10	9'-6			28		29	10'-5		3.309	410
16	9	11	11'-4	10'-0			28		29	10'-11		3.448	418
17	9	12	11'-10	10'-6			30		31	11'-5		3.587	443
18	10	12	12'-4	11'-0	6"	4'-8	30	3'-2	31	11'-11	1'-0	3.726	451
19	10	13	12'-11	11'-6	7"	4'-10	32	3'-4	33	12'-6	1'-1	4.610	489
20	11	13	13'-5	12'-0			32		33	13'-0		4.775	498
21	11	14	13'-11	12'-6			34		35	13'-6		4.941	523
22	12	14	14'-5	13'-0			34		35	14'-0		5.107	531
23	12	15	14-11	13'-6			36		37	14'-6		5.272	552
24	13	15	15'-5	14'-0			36		37	15'-0		5.438	565
25	13	16	15'-11	14'-6			38		39	15'-6		5.604	590
26	14	16	16'-5	15'-0			38		39	16'-0		5.769	599
27	14	17	16-11	15'-6			40		41	16'-6		5.935	624
28	15	17	17'-5	16'-0			40		41	17'-0		6.100	632
29	15	18	17'-11	16'-6			42		43	17'-6		6.266	658
30	16	18	18'-5	17'-0			42		43	18'-0		6.432	666
31	16	19	18'-11	17'-6			44		45	18'-6		6.597	692
32	17	19	19'-5	18'-0			44		45	19'-0		6.763	700
33	17	20	19'-11	18'-6			46		47	19'-6		6.929	725
34	18	20	20'-5	19'-0			46		47	20'-0		7.094	734
35	18	21	20'-11	19'-6			48		49	20'-6		7.260	759
36	19	21	21'-5	20'-0			48		49	21'-0		7.426	767
37	19	22	21'-11	20'-6			50		51	21'-6		7.591	793
38	20	22	22'-5	21'-0	7"	4'-10	50	3'-4	51	22'-0	1'-1	7.757	801
39	20	23	23'-0	21'-6	8"	5'-0	52	3'-6	53	22'-7	1'-2	9.259	846
40	21	23	23'-6	22'-0			52		53	23'-1		9.452	855
41	21	24	24'-0	22'-6			54		55	23'-7		9.646	881
42	22	24	24'-6	23'-0			54		55	24'-1		9.839	889
43	22	25	25'-0	23'-6			56		57	24'-7		10.032	915
44	23	25	25'-6	24'-0			56		57	25'-1		10.226	924
45	23	26	26'-0	24'-6			58		59	25'-7		10.419	950
46	24	26	26'-6	25'-0			58		59	26'-1		10.613	958
47	24	27	27'-0	25'-6			60		61	26'-7		10.806	984
48	25	27	27'-6	26'-0			60		61	27'-1		11.000	992
49	25	28	28'-0	26'-6			62		63	27'-7		11.193	1018
50	26	28	28'-6	27'-0			62		63	28'-1		11.386	1027
51	26	29	29'-0	27'-6			64		65	28'-7		11.580	1053
52	27	29	29'-6	28'-0			64		65	29'-1		11.773	1055
53	27	30	30'-0	28'-6			66		67	29'-7		11.967	1087
54	28	30	30'-6	29'-0	8"	5'-0	66	3'-6	67	30'-1	1'-2	12.160	1096

N=1 S=6 W=4'-0 M=0'-4

COLUMN "B"

LINE	DIMENSIONS H	DIMENSIONS K	DIMENSIONS T	REINFORCING STEEL A LENGTH	A NO	B LENGTH	B NO	C NO.=18 LENGTH	D NO.=4 LENGTH	E NO.=2 LENGTH	QUANTITIES CONC. CU. YD.	QUANTITIES REINF. STEEL LBS.
1	----		---	----	--	---	--	----	---	---	----	----
2	----		---	----	--	---	--	----	---	---	----	----
3	----		---	----	--	---	--	----	---	---	----	----
4	----		---	----	--	---	--	----	---	---	----	----
5	----		---	----	--	---	--	----	---	---	----	----
6	6'-4	5'-0	6"	5'-8	18	3'-2	23	5'-11	1'-0	1'-6	2.417	301
7	6'-10	5'-6			20		25	6'-5			2.575	321
8	7'-4	6'-0			20		25	6'-11			2.732	338
9	7'-10	6'-6			22		27	7'-5			2.889	366
10	8'-4	7'-0			22		27	7'-11			3.047	375
11	8'-10	7'-6			24		29	8'-5			3.204	403
12	9'-4	8'-0			24		29	8'-11			3.362	412
13	9'-10	8'-6			26		31	9'-5			3.519	440
14	10'-4	9'-0			26		31	9'-11			3.675	450
15	10'-10	9'-6			28		33	10'-5			3.834	477
16	11'-4	10'-0			28		33	10'-11			3.991	486
17	11'-10	10'-6			30		35	11'-5			4.149	515
18	12'-4	11'-0	6"	5'-8	30	3'-2	35	11'-11	1'-0	1'-6	4.305	524
19	12'-11	11'-6	7"	5'-10	32	3'-4	37	12'-6	1'-1	1'-7	5.299	566
20	13'-5	12'-0			32		37	13'-0			5.486	575
21	13'-11	12'-6			34		39	13'-6			5.673	604
22	14'-5	13'-0			34		39	14'-0			5.861	613
23	14'-11	13'-6			36		41	14'-6			6.048	642
24	15'-5	14'-0			36		41	15'-0			6.235	651
25	15'-11	14'-6			38		43	15'-6			6.422	680
26	16'-5	15'-0			38		43	16'-0			6.609	689
27	16'-11	15'-6			40		45	16'-6			6.797	637
28	17'-5	16'-0			40		45	17'-0			6.984	727
29	17'-11	16'-6			42		47	17'-6			7.171	755
30	18'-5	17'-0			42		47	18'-0			7.358	765
31	18'-11	17'-6			44		49	18'-6			7.545	793
32	19'-5	18'-0			44		49	19'-0			7.733	803
33	19'-11	18'-6			46		51	19'-6			7.920	831
34	20'-5	19'-0			46		51	20'-0			8.107	841
35	20'-11	19'-6			48		53	20'-6			8.294	869
36	21'-5	20'-0			48		53	21'-0			8.481	878
37	21'-11	20'-6			50		55	21'-6			8.669	907
38	22'-5	21'-0	7"	5'-10	50	3'-4	55	22'-0	1'-1	1'-7	8.856	916
39	23'-0	21'-6	8"	6'-0	52	3'-6	57	22'-7	1'-2	1'-8	10.533	966
40	23'-6	22'-0			52		57	23'-1			10.752	975
41	24'-0	22'-6			54		59	23'-7			10.970	1004
42	24'-6	23'-0			54		59	24'-1			11.188	1014
43	25'-0	23'-6			56		61	24'-7			11.406	1043
44	25'-6	24'-0			56		61	25'-1			11.629	1052
45	26'-0	24'-6			58		63	25'-7			11.842	1082
46	26'-6	25'-0			58		63	26'-1			12.060	1091
47	27'-0	25'-6			60		65	26'-7			12.278	1120
48	27'-6	26'-0			60		65	27'-1			12.496	1130
49	28'-0	26'-6			62		67	27'-7			12.714	1159
50	28'-6	27'-0			62		67	28'-1			12.933	1168
51	29'-0	27'-6			64		69	28'-7			13.151	1197
52	29'-6	28'-0			64		69	29'-1			13.369	1207
53	30'-0	28'-6			66		71	29'-7			13.587	1236
54	30'-6	29'-0	8"	6'-0	66	3'-6	71	30'-1	1'-2	1'-8	13.805	1245

N=4 S=7 W=5'-0 M=1'-4

COLUMN "C"

LINE	DIMENSIONS H	DIMENSIONS K	DIMENSIONS T	REINFORCING STEEL A LENGTH	A NO	B LENGTH	B NO	C NO.=18 LENGTH	D NO.=4 LENGTH	E NO.=2 LENGTH	QUANTITIES CONC. CU. YD.	QUANTITIES REINF. STEEL LBS.
1	----	----	---	----	--	----	--	----	----	----	----	----
2	----	----	---	----	--	----	--	----	----	----	----	----
3	----	----	---	----	--	----	--	----	----	----	----	----
4	----	----	---	----	--	----	--	----	----	----	----	----
5	----	----	---	----	--	----	--	----	----	----	----	----
6	----	----	---	----	--	----	--	----	----	----	----	----
7	6'-10	5'-6	6"	6'-2	20	3'-2	26	6'-5	1'-0	2'-0	2.763	343
8	7'-4	6'-0			20		26	6'-11			2.930	353
9	7'-10	6'-6			22		28	7'-5			3.096	382
10	8'-4	7'-0			22		28	7'-11			3.263	391
11	8'-10	7'-6			24		30	8'-5			3.430	420
12	9'-4	8'-0			24		30	8'-11			3.596	429
13	9'-10	8'-6			26		32	9'-5			3.763	458
14	10'-4	9'-0			26		32	9'-11			3.930	467
15	10'-10	9'-6			28		34	10'-5			4.096	496
16	11'-4	10'-0			28		34	10'-11			4.263	506
17	11'-10	10'-6			30		36	11'-5			4.430	535
18	12'-4	11'-0	6"	6'-2	30	3'-2	36	11'-11	1'-0	2'-0	4.596	544
19	12'-11	11'-6	7"	6'-4	32	3'-4	38	12'-6	1'-1	2'-1	5.644	587
20	13'-5	12'-0			32		38	13'-0			5.842	596
21	13'-11	12'-6			34		40	13'-6			6.040	626
22	14'-5	13'-0			34		40	14'-0			6.238	635
23	14'-11	13'-6			36		42	14'-6			6.436	665
24	15'-5	14'-0			36		42	15'-0			6.634	674
25	15'-11	14'-6			38		44	15'-6			6.832	704
26	16'-5	15'-0			38		44	16'-0			7.030	713
27	16'-11	15'-6			40		46	16'-6			7.228	743
28	17'-5	16'-0			40		46	17'-0			7.426	752
29	17'-11	16'-6			42		48	17'-6			7.624	782
30	18'-5	17'-0			42		48	18'-0			7.822	791
31	18'-11	17'-6			44		50	18'-6			8.020	821
32	19'-5	18'-0			44		50	19'-0			8.215	830
33	19'-11	18'-6			46		52	19'-6			8.416	860
34	20'-5	19'-0			46		52	20'-0			8.615	869
35	20'-11	19'-6			48		54	20'-6			8.812	899
36	21'-5	20'-0			48		54	21'-0			9.011	908
37	21'-11	20'-6			50		56	21'-6			9.209	937
38	22'-5	21'-0	7"	6'-4	50	3'-4	56	22'-0	1'-1	2'-1	9.407	946
39	23'-0	21'-6	8"	6'-6"	52	3'-6	58	22'-7	1'-2	2'-2	11.171	998
40	23'-6	22'-0			52		58	23'-1			11.401	1007
41	24'-0	22'-6			54		60	23'-7			11.632	1037
42	24'-6	23'-0			54		60	24'-1			11.862	1047
43	25'-0	23'-6			56		62	24'-7			12.093	1077
44	25'-6	24'-0			56		62	25'-1			12.323	1086
45	26'-0	24'-6			58		64	25'-7			12.554	1117
46	26'-6	25'-0			58		64	26'-1			12.784	1126
47	27'-0	25'-6			60		66	26'-7			13.015	1156
48	27'-6	26'-0			60		66	27'-1			13.245	1166
49	28'-0	26'-6			62		68	27'-7			13.476	1196
50	28'-6	27'-0			62		68	28'-1			13.706	1205
51	29'-0	27'-6			64		70	28'-7			13.937	1235
52	29'-6	28'-0			64		70	29'-1			14.167	1245
53	30'-0	28'-6			66		72	29'-7			14.398	1275
54	30'-6	29'-0	8"	6'-6	66	3'-6	72	30'-1	1'-2	2'-2	14.628	1285

N=5 S=7 W=5'-5 M=1'-10

COLUMN "D"

LINE	DIMENSIONS H	DIMENSIONS K	DIMENSIONS T	REINFORCING STEEL A LENGTH	A NO	B LENGTH	B NO	C NO.=20 LENGTH	D NO.=4 LENGTH	E NO.=2 LENGTH	QUANTITIES CONC. CU. YD.	QUANTITIES REINF. STEEL LBS.
1	----	----	---	----	--	----	--	----	----	----	----	----
2	----	----	---	----	--	----	--	----	----	----	----	----
3	----	----	---	----	--	----	--	----	----	----	----	----
4	----	----	---	----	--	----	--	----	----	----	----	----
5	----	----	---	----	--	----	--	----	----	----	----	----
6	----	----	---	----	--	----	--	----	----	----	----	----
7	----	----	---	----	--	----	--	----	----	----	----	----
8	7'-4	6'-0	6"	6'-8	20	3'-2	28	6'-11	1'-0	2'-6	3.127	385
9	7'-10	6'-6			22		30	7'-5			3.303	417
10	8'-4	7'-0			22		30	7'-11			3.479	427
11	8'-10	7'-6			24		32	8'-5			3.655	458
12	9'-4	8'-0			24		32	8'-11			3.831	468
13	9'-10	8'-6			26		34	9'-5			4.007	499
14	10'-4	9'-0			26		34	9'-11			4.182	510
15	10'-10	9'-6			28		36	10'-5			4.358	541
16	11'-4	10'-0			28		36	10'-11			4.534	551
17	11'-10	10'-6			30		38	11'-5			4.710	582
18	12'-4	11'-0	6"	6'-8	30	3'-2	38	11'-11	1'-0	2'-6	4.886	592
19	12'-11	11'-6	7"	6'-10	32	3'-4	40	12'-6	1'-1	2'-7	5.988	638
20	13'-5	12'-0			32		40	13'-0			6.197	648
21	13'-11	12'-6			34		42	13'-6			6.406	680
22	14'-5	13'-0			34		42	14'-0			6.615	690
23	14'-11	13'-6			36		44	14'-6			6.824	722
24	15'-5	14'-0			36		44	15'-0			7.032	733
25	15'-11	14'-6			38		46	15'-6			7.241	764
26	16'-5	15'-0			38		46	16-0			7.450	775
27	16'-11	15'-6			40		48	16'-6			7.659	806
28	17'-5	16'-0			40		48	17'-0			7.868	817
29	17'-11	16'-6			42		50	17'-6			8.076	848
30	18'-5	17'-0			42		50	18'-0			8.285	859
31	18'-11	17'-6			44		52	18'-6			8.494	890
32	19'-5	18'-0			44		52	19'-0			8.703	901
33	19'-11	18'-6			46		54	19'-6			8.912	932
34	20'-5	19'-0			46		54	20'-0			9.120	948
35	20'-11	19'-6			48		56	20'-6			9.329	975
36	21'-5	20'-0			48		56	21'-0			9.538	985
37	21'-11	20'-6			50		58	21'-6			9.747	1017
38	22'-5	21'-0	7"	6'-10	50	3'-4	58	22'-0	1'-1	2'-7	9.965	1027
39	23'-0	21'-6	8"	7'-0	52	3'-6	60	22'-7	1'-2	2'-8	11.808	1080
40	23'-6	22'-0			52		60	23'-1			12.051	1091
41	24'-0	22'-6			54		62	23'-7			12.294	1123
42	24'-6	23'-0			54		62	24'-1			12.536	1134
43	25'-0	23'-6			56		64	24'-7			12.779	1166
44	25'-6	24'-0			56		64	25'-1			13.022	1176
45	26'-0	24'-6			58		66	25'-7			13.265	1208
46	26'-6	25'-0			58		66	26'-1			13.508	1219
47	27'-0	25'-6			60		68	26'-7			13.750	1251
48	27'-6	26'-0			60		68	27'-1			13.993	1262
49	28'-0	26'-6			62		70	27'-7			14.236	1294
50	28'-6	27'-0			62		70	28'-1			14.479	1304
51	29'-0	27'-6			64		72	28'-7			14.722	1337
52	29'-6	28'-0			64		72	29'-1			14.964	1347
53	30'-0	28'-6			66		74	29'-7			15.207	1380
54	30'-6	29'-0	8"	7'-0	66	3'-6	74	30'-1	1'-2	2'-8	15.450	1390

N=6 S=8 W=6'-0 M=2'-4

TABLE 1 : CONCRETE DISPLACED BY PIPES:

PIPE SIZES R.C.P.	PIPE SIZES C.M.P.	6" CU. YD.	7" CU. YD.	8" CU. YD.
42"	48"	0.233	0.271	0.310
48"	60"	0.340	0.396	0.453
54"	66"	0.427	0.498	0.569
60"	72"	0.524	0.611	0.698
	54"	0.295	0.344	0.393

TABLE 2 : MAXIMUM PIPE SIZE TO BE USED:

	R.C.P.	C.M.P.
COLUMN A	42"	48"
COLUMN B	48"	60"
COLUMN C	54"	66"
COLUMN D	60"	72"

TABLE 3 : CONCRETE NEEDED FOR FORMED INVERT:

PIPES SIZES	R.C.P. CU. YD.	C.M.P. CU. YD.
42"	0.273	----
48"	0.428	0.143
54"	----	----
60"	0.617	0.223
66"	----	0.270
72"	----	0.322

STRUCTURAL STEEL :

RECTANGULAR GRATE & FRAME = 340 LBS
BICYCLE - SAFE GRATE & FRAME = 365 LBS.
SOLID COVER & FRAME = 474 LBS.

REVISIONS

NO.	DATE	APPR.	REMARKS

UTAH DEPARTMENT OF TRANSPORTATION
STANDARD DRAWINGS FOR ROAD AND BRIDGE CONSTRUCTION
SALT LAKE CITY, UTAH

RECOMMENDED FOR APPROVAL — JAN.01,2005 DATE
CHAIRMAN STANDARDS COMMITTEE
APPROVED — JAN.01,2005 DATE
DEPUTY DIRECTOR

STANDARD CATCH BASIN AND CLEANOUT BOX
SCHEDULE OF INSTALLATION
42" TO 60" RCP
48" TO 72" CMP
STANDARD DRAWING TITLE

STD DWG
CB 10C

DGN File:N:\Esd\Standard Drawings\Imperial\2005Approved\Catch Basins and Cleanouts (CB)\cb10cu.dgn
15-DEC-2004

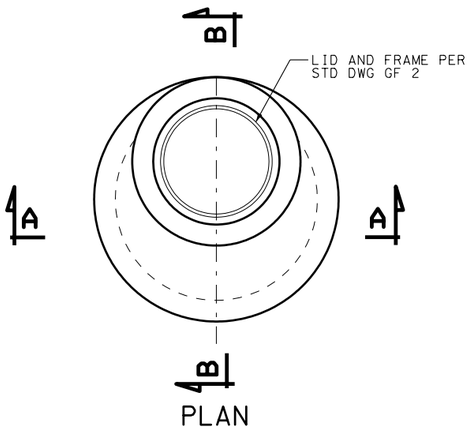

PLAN

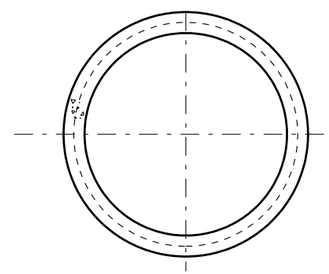

SECTION C-C

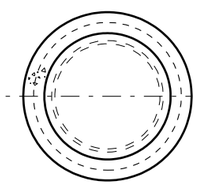

SECTION D-D

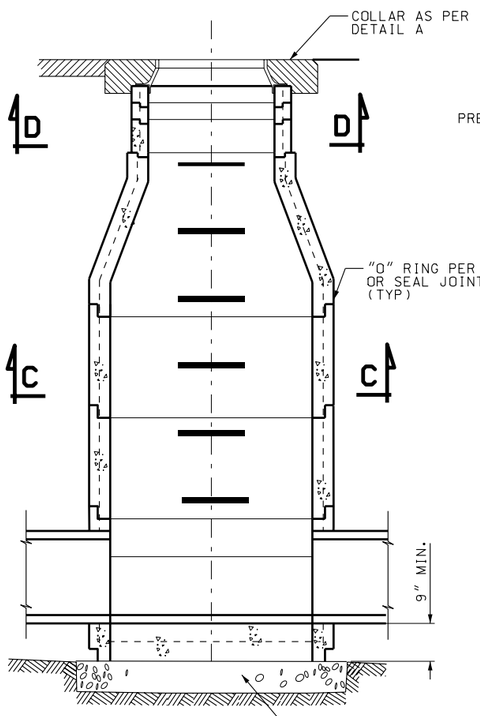

SECTION A-A

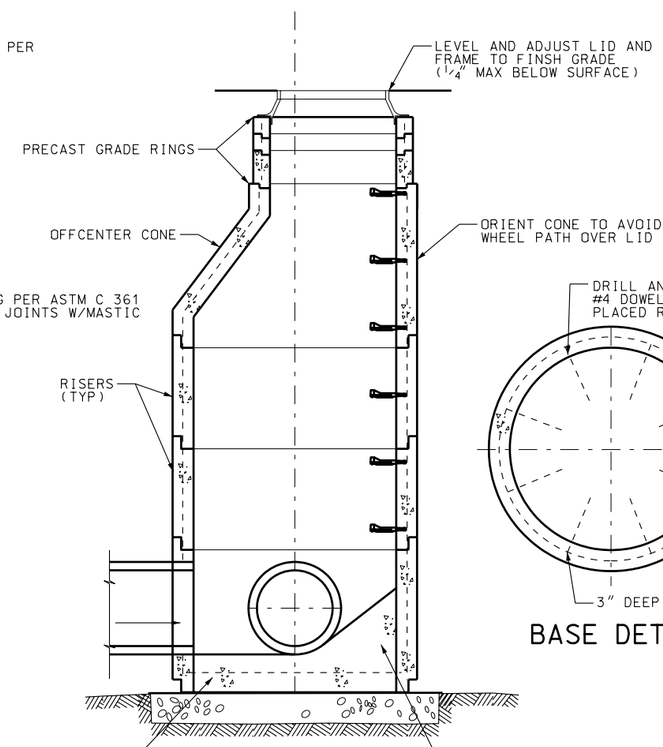

SECTION B-B

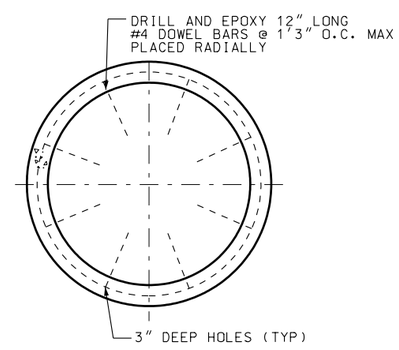

BASE DETAIL

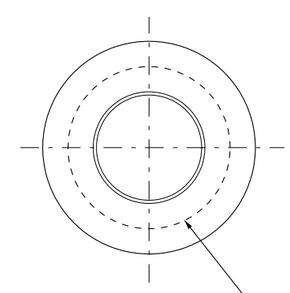

PLAN

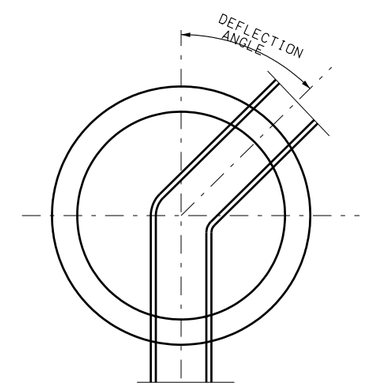

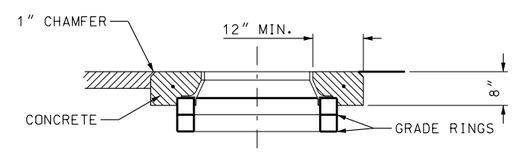

SECTION

DETAIL A

NOTES:

1. USE 3",4",6", OR 8" HIGH GRADE RINGS.
2. USE SECTIONS 1'-0", 1'-6", 2'-0", 3'-0" OR 4'-0" HIGH.
3. IF THE REQUIRED RAISE IS MORE THAN 1'-0", REMOVE THE CONE AND ADD RISER RINGS TO THE RISER SECTION. COMPACT BACKFILL TO A MINIMUM OF 90% DENSITY AND REPLACE THE ROADWAY SURFACING IN KIND.
4. PREVENT DEBRIS FROM FALLING INTO THE MANHOLE DURING CONSTRUCTION. CLEAN AND REMOVE ANY DEBRIS IN THE MANHOLE AND CONNECTING PIPES.
5. REPAIR ANY DAMAGE OR REPLACE DAMAGED MANHOLES TO THE SATISFACTION OF THE ENGINEER AT NO ADDITIONAL COST TO THE DEPARTMENT.
6. USE COATED DEFORMED BILLET REINFORCING STEEL BARS CONFORMING TO AASHTO M 284 OR M 111 AND M 31 GRADE 60 RESPECTIVELY.
7. FOR LID AND FRAME SEE STD DWG GF 2.
8. USE CLASS AA (AE) CONCRETE.
9. USE TYPE II CEMENT (LOW ALKALI).
10. PROVIDE 2" CONCRETE COVER TO REINFORCING STEEL.
11. PROVIDE HYDRAULIC CEMENT MORTAR ACCORDING TO ASTM C 185 AND PRECAST MANHOLE SECTIONS PER ASTM C 478.
12. PLACE STEPS BEGINNING 2' BELOW FINSHED GRADE AS PER STD DWG GF 6.
13. SUBMIT DESIGN FOR MANHOLES GREATER THAN 5'IN DIAMETER OR DEEPER THAN 18'TO ENGINEER FOR APPROVAL.
14. DO NOT OVEREXCAVATE. PLACE 6" MIN. UTBC BEDDING ACCORDING TO SECTION 02721 ON FIRM SUBGRADE. DO NOT USE CRUSHED ROCK IN ACTIVE WATERTABLE WITHOUT APPROVAL OF THE ENGINEER.

DESIGN DATA

HS 20 OR INTERSTATE ALTERNATE LOADING IN ACCORDANCE WITH AASHTO 17th EDITION SPECIFICATIONS.

STRUCTURAL STEEL: Fy = 36,000 psi

STRUCTURAL CONCRETE: f'c = 4,000 psi
fy = 60,000 psi
n = 8

	MAX. PIPE O.D.	
DIA	45° DEFL	90° DEFL
4'	31"	25"
5'	42"	32"

PRECAST SECTIONS	MAX. HEIGHT
GRADE RINGS	8"
COMBINED GRADE RINGS	18"
CONES	36"
RISERS	48"

REVISIONS

NO.	DATE	APPR.	REMARKS

UTAH DEPARTMENT OF TRANSPORTATION
STANDARD DRAWINGS FOR ROAD AND BRIDGE CONSTRUCTION
SALT LAKE CITY, UTAH

RECOMMENDED FOR APPROVAL — JAN.01,2005 DATE
CHAIRMAN STANDARDS COMMITTEE APPROVED — JAN.01,2005 DATE
DEPUTY DIRECTOR

STANDARD MANHOLE

STD DWG
CB 11

DGN File:N:\Eng\Standard_Drawings\Imperial\2005Approved\Catch Basins and Cleanouts (CB)\CB11.dgn
15-DEC-2004

CRASH CUSHIONS

TYPE A,B & D

TYPE E

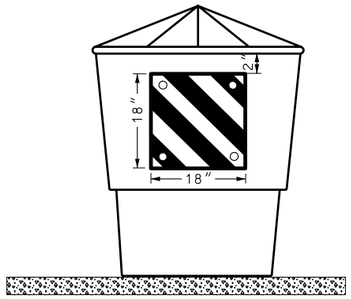

PLACE THE APPROPRIATE OBJECT MARKER PANEL OR SHEETING 2 INCHES FROM THE TOP OF THE LEAD BARREL OF THE ARRAY.

MARKER POST NOT REQUIRED.

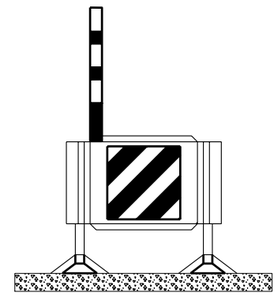

OBJECT MARKER PLATE OR SHEETING: ATTACH TO THE TOP FRONT AND SIDE OF UNIT NEAREST THE APPROACH LANE OF TRAFFIC. IN A GORE AREA CENTER OBJECT MARKER.

* APPROVED SYSTEM TYPE D, REACT-350 HAS AN OBJECT MARKER SUPPLIED WITH THE SYSTEM, MARKER POST IS NOT REQUIRED.

TYPE A,B & D

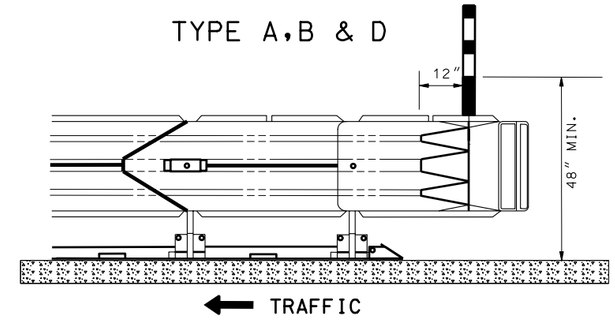

MARKER POST:

MOUNT ON THE SIDE OF THE APPROACH TRAFFIC, 12 INCHES FROM THE BACK EDGE OF PLASTIC NOSE PIECE. IN GORE AREAS MOUNT ON BOTH SIDES.

MARKER PLATE

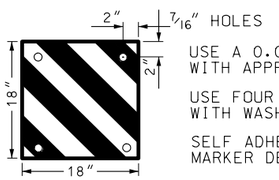

USE A 0.032 GAUGE ALUMINUM MARKER PLATE WITH APPROPRIATE MARKER SHEETING

USE FOUR 1 INCH X 3/8 INCH ZINC PLATED BOLTS WITH WASHERS AND NUTS TO MOUNT PLATE.

SELF ADHESIVE SHEETING WITH APPROPRIATE OBJECT MARKER DESIGNATION CAN BE USED AS A SUBSTITUTE.

CRASH CUSHION TYPE F.

THIS SYSTEM HAS A BELTED OR PLASTIC NOSE PIECE AND STEEL POSTS.OBJECT MARKER MOUNTING SIMILAR TO TYPE H AND MARKER POST IS MOUNTED ON THE NOSE PIECE SIMILAR TO TYPE B.

TYPE H

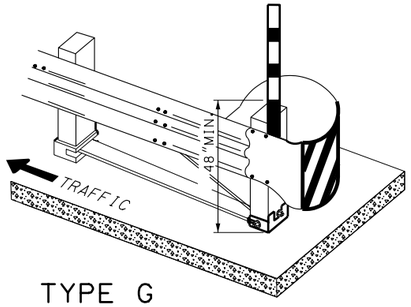

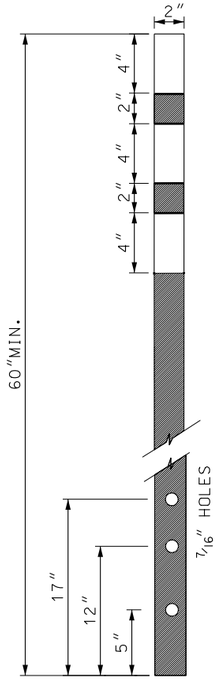

MARKER POST

PLACE YELLOW BANDS OF REFLECTIVE SHEETING AS SPECIFIED BY STANDARD SPECIFICATION, SECTION 02891, PART 2 AT THE TOP OF THE POST WITH A 2 INCH SPACE BETWEEN THE 1ST AND 2ND BAND AND THE 2ND AND 3RD BAND. DRILL THREE MOUNTING HOLES, 7/16 INCH IN DIAMETER, MEASURED FROM THE BOTTOM UP 5 INCHES, 12 INCHES AND 17 INCHES.

MARKER POST MOUNTING

MOUNT MARKER POST 48 INCHES FROM THE BOTTOM OF THE THIRD YELLOW BAND TO GROUND LEVEL. DO NOT COLLAPSE MARKER POST WHEN SECURING TO SYSTEM.

WOOD POST: PLACE MARKER POST ON THE FRONT OF THE FIRST POST OF SYSTEM AND SECURE WITH THREE 3/8 X 4 INCH ZINC PLATED LAG BOLTS AND WASHERS.

METAL POST: PLACE MARKER POST ON THE FRONT OF THE FIRST POST OF SYSTEM AND SECURE WITH THREE 3/8 X 3 INCH ZINC PLATED BOLTS WITH NUTS AND WASHERS.

PLASTIC NOSE PIECES: PLACE MARKER POST 12 INCHES FORWARD FROM THE BACK EDGE OF THE NOSE PIECE AND SECURE WITH THREE 3/8 X 3 INCH ZINC PLATED BOLTS WITH WASHERS.

NOTE: 1

USE MARKER POST UNLESS OTHERWISE SPECIFIED. USE IS OPTIONAL WHEN SNOW ACCUMULATION IS NOT A CONCERN.

NOTE: 2

SHEETING TO COMPLY WITH UDOT STANDARD SPECIFICATION 02842 FOR FLEXIBLE SHEETING.

MARKER POST

TYPE C

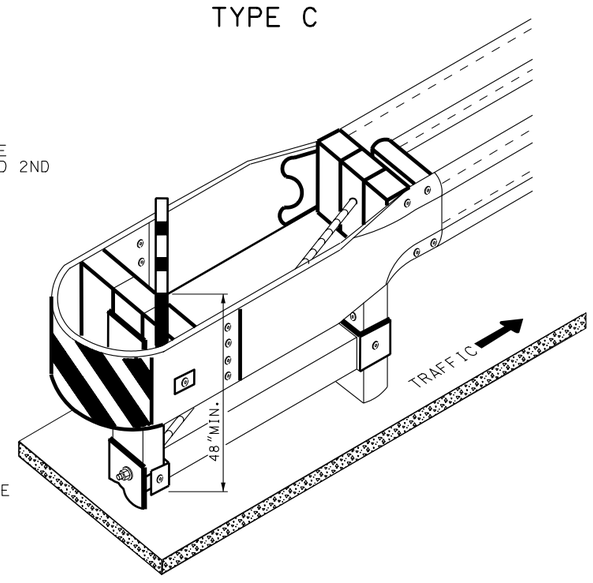

OBJECT MARKER PLATE OR SHEETING: ATTACH TO THE FRONT OF SYSTEM TOP, AND OFFSET 6 INCHES FROM CENTER TOWARD THE APPROACH LANE OF TRAFFIC.

TYPE G

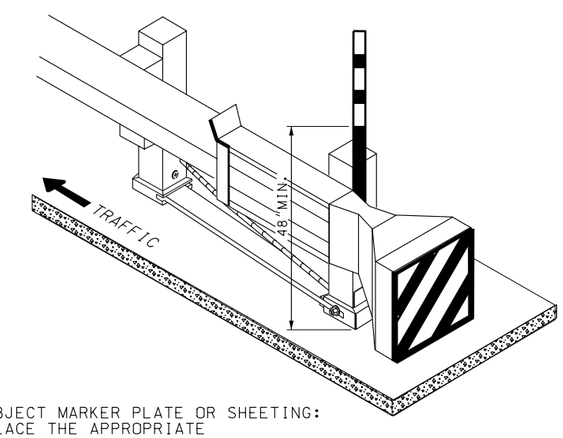

OBJECT MARKER PLATE OR SHEETING: PLACE THE APPROPRIATE OBJECT MARKER PANEL TO THE FRONT OF THE SYSTEMS.

REVISIONS

NO.	DATE	APPR.	REMARKS

UTAH DEPARTMENT OF TRANSPORTATION
STANDARD DRAWINGS FOR ROAD AND BRIDGE CONSTRUCTION
SALT LAKE CITY, UTAH

RECOMMENDED FOR APPROVAL — JAN.01.2005 DATE
CHAIRMAN STANDARDS COMMITTEE APPROVED — JAN.01.2005 DATE
DEPUTY DIRECTOR

CRASH CUSHION MARKINGS
STANDARD DRAWING TITLE

STD DWG
CC 1

DGN File:N:\Esd\Standard_Drawings\Imperial\2005\Approved\Crash Cushions (CC)\cc01.dgn
15-DEC-2004

PLAN A1: SPEEDS UP TO 40 MPH

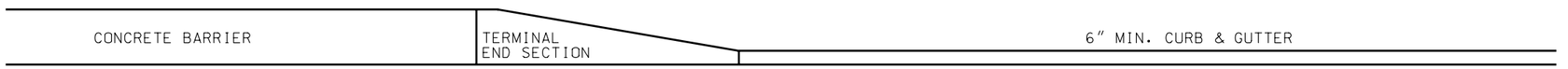

PROFILE VIEW

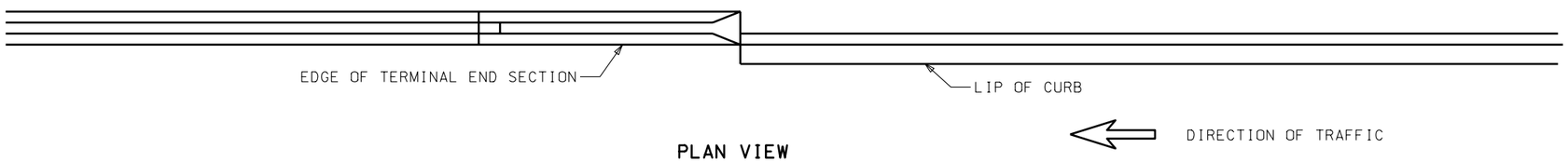

PLAN VIEW

PLAN A2: SPEEDS OVER 40 MPH

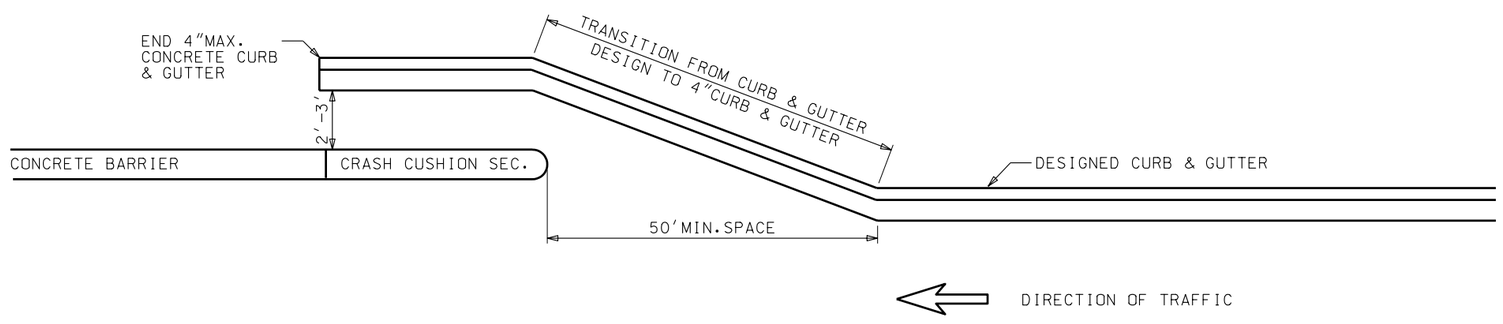

REVISIONS

NO.	DATE	APPR.	REMARKS

UTAH DEPARTMENT OF TRANSPORTATION
STANDARD DRAWINGS FOR ROAD AND BRIDGE CONSTRUCTION
SALT LAKE CITY, UTAH

RECOMMENDED FOR APPROVAL — JAN.01.2005 DATE
DEPUTY DIRECTOR

CHAIRMAN STANDARDS COMMITTEE APPROVED — JAN.01.2005 DATE

CRASH CUSHION
DRAINAGE DETAILS
GUIDELINE A

STANDARD DRAWING TITLE

STD DWG
CC 2

DGN File:N:\Esa\Standard_Drawings\Imperial\2005Approved\Crash Cushions (CC)\cc02.dgn
15-DEC-2004

CRASH CUSHION CONNECTION

NOTE:
REFER TO MANUFACTURER'S SPECIFICATIONS FOR CERTIFICATION REQUIREMENTS.

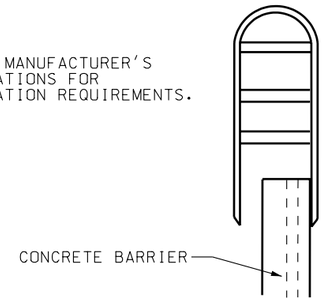

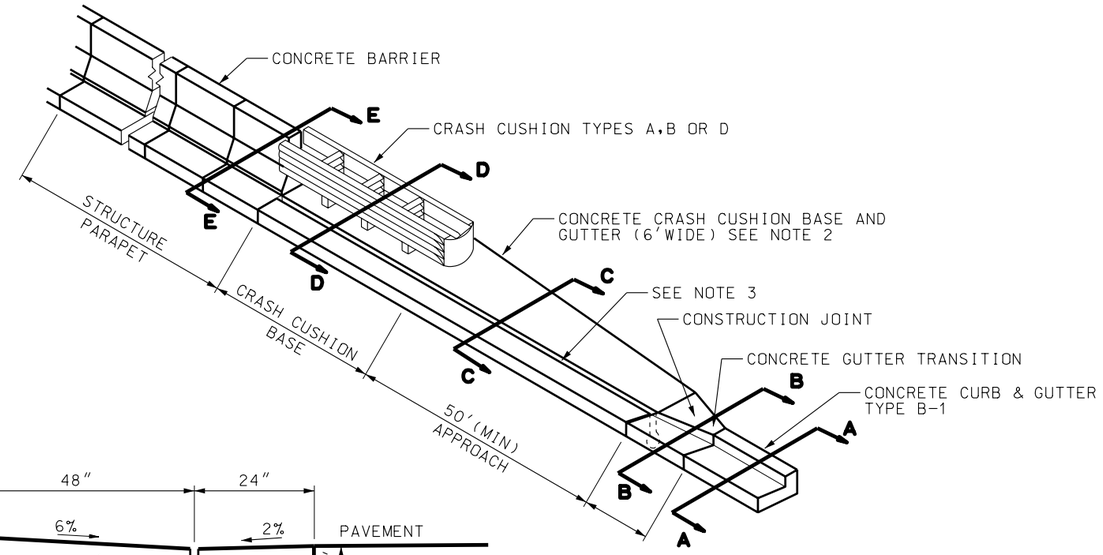

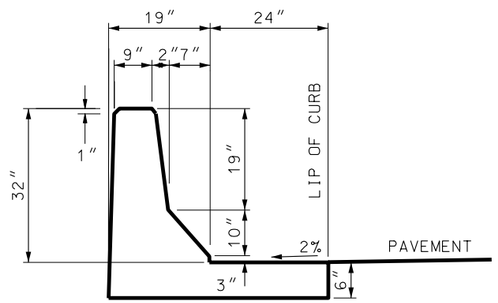

SECTION E-E

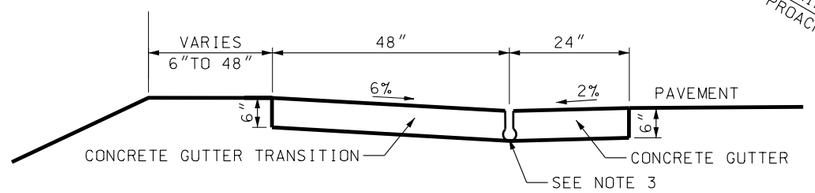

SECTION C-C

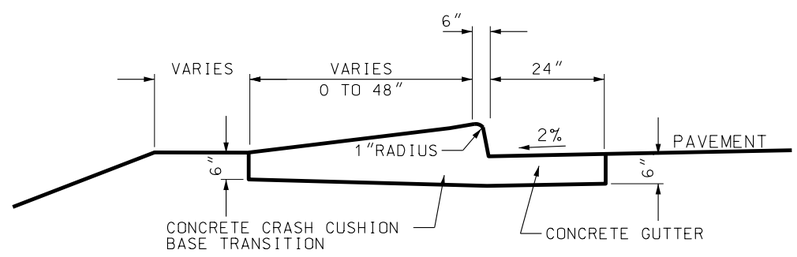

SECTION B-B

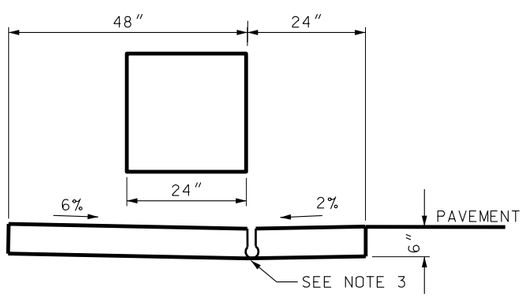

SECTION D-D

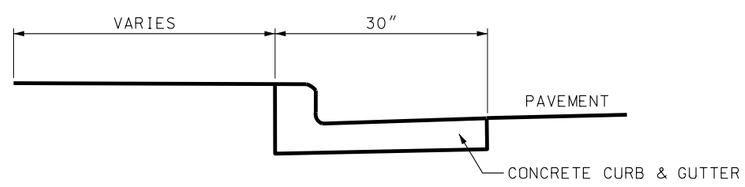

SECTION A-A

NOTES:

1. ALTERNATIVE INSTALLATION TO GUIDELINES A PLAN 2A STD DWG CC 2, FOR CRASH CUSHION TYPES A, B & D.
2. DESIGN A DRAINAGE SYSTEM THAT DOES NOT CREATE A RAISED CURB IN FRONT OF OR TO THE SIDES OF THE CRUSH CUSHION SYSTEM WHEN PARALLEL ROAD SYSTEM IS 1 PERCENT OR GREATER. A SLOTTED DRAINAGE SYSTEM IS AN OPTION.
3. CAST, IN A MONOLITHIC POUR, CRASH CUSHION BASE AND GUTTER FROM REAR OF SYSTEM TO THE APPROACH TRANSITION WITH CURB AND GUTTER.

REVISIONS

NO.	DATE	APPR.	REMARKS

UTAH DEPARTMENT OF TRANSPORTATION
STANDARD DRAWINGS FOR ROAD AND BRIDGE CONSTRUCTION
SALT LAKE CITY, UTAH

RECOMMENDED FOR APPROVAL — JAN.01,2005 DATE
CHAIRMAN STANDARDS COMMITTEE APPROVED — JAN.01,2005 DATE
DEPUTY DIRECTOR

CRASH CUSHION DRAINAGE DETAILS GUIDELINE B
STANDARD DRAWING TITLE

STD DWG
CC 3

DGN File: N:\Esd\Standard Drawings\Imperial\2005Approved\Crash Cushions (CC)\cc03.dgn
15-DEC-2004

SHOULDER APPLICATION

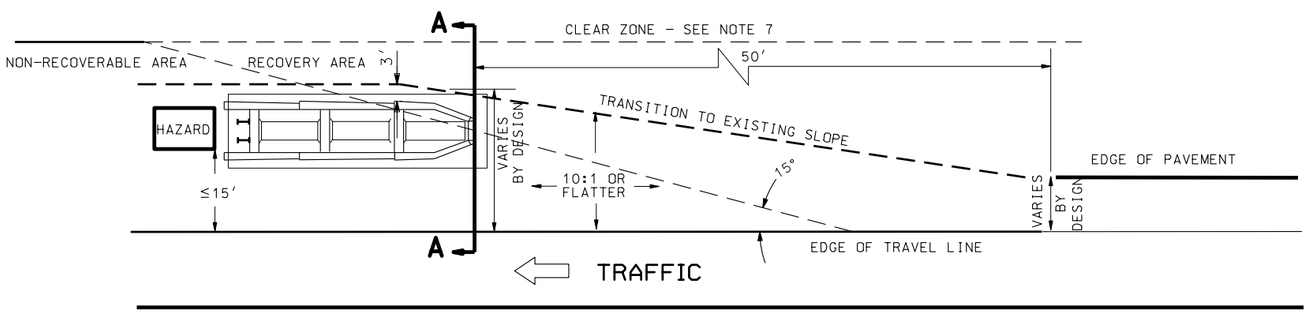

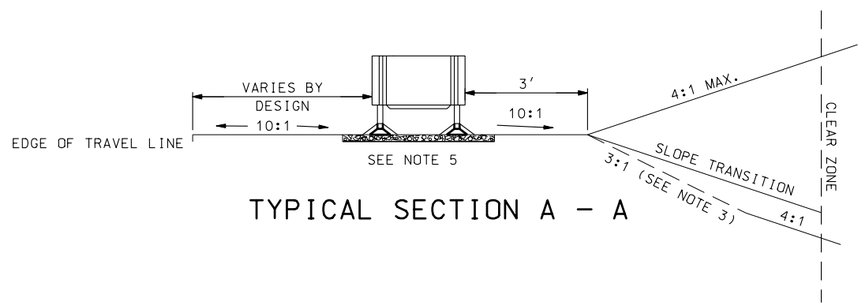

TYPICAL SECTION A - A

GORE APPLICATION AREA

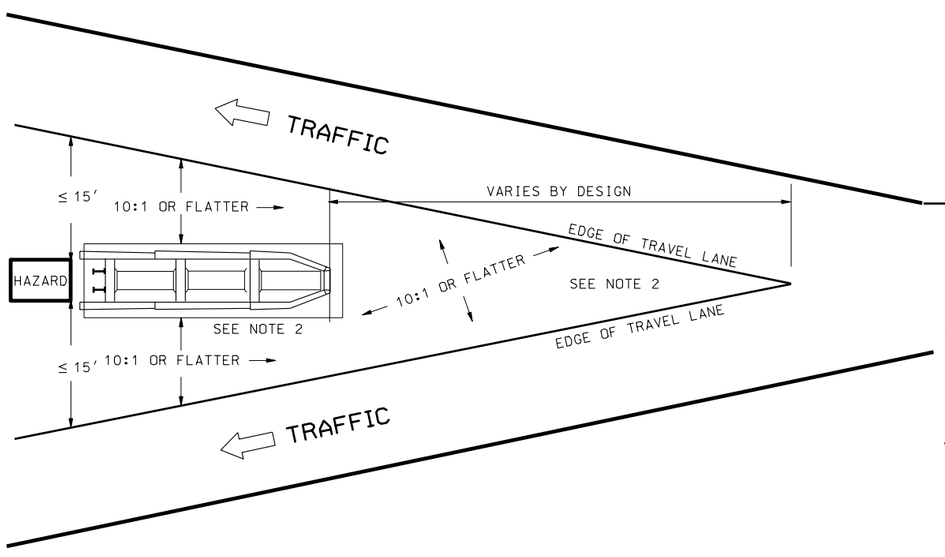

MEDIAN APPLICATION

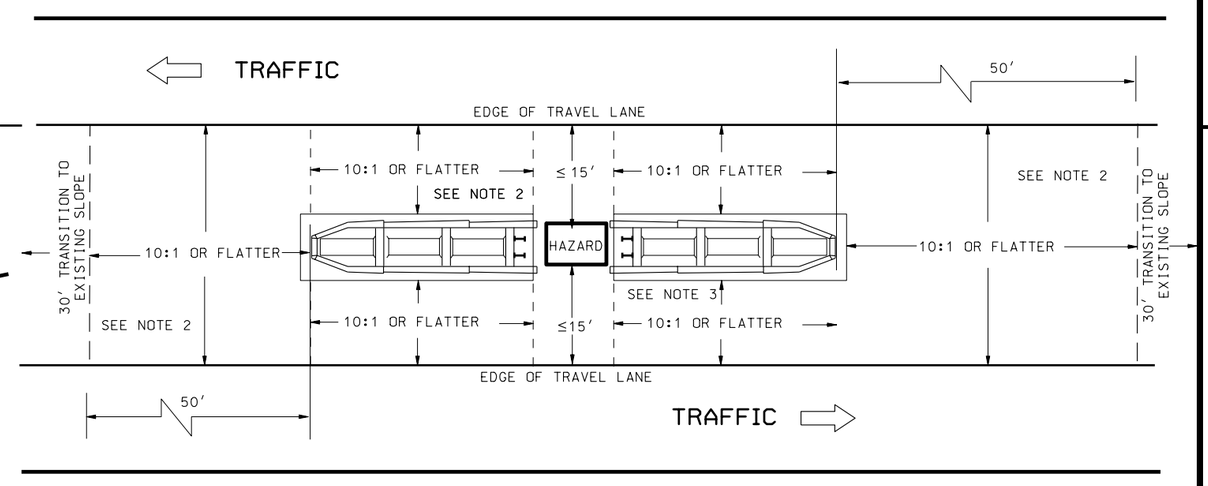

NOTES:

1. CRASH CUSHION TYPE A: QUADGUARD, MANUFACTURED BY ENERGY ABSORPTION SYSTEMS, TO PROTECT HAZARDS FROM 37 INCHES TO 90 INCHES.

   CRASH CUSHION TYPE B: QUADGUARD, MANUFACTURED BY ENERGY ABSORPTION SYSTEMS, TO PROTECT HAZARDS UP TO 36 INCHES.

   CRASH CUSHION TYPE D: QUADGUARD ELITE AND QUADGUARD LMC, MANUFACTURED BY ENERGY ABSORPTION SYSTEMS, AND REACT 350, MANUFACTURED BY ROADWAY SAFETY SERVICES. TYPE D SYSTEMS PROTECT HAZARDS UP TO 90 INCHES IN WIDTH, TYPE D SYSTEMS ARE USED WHERE ONE OR MORE IMPACTS PER YEAR ARE ANTICIPATED, OR WHEN REPAIR HISTORY INDICATES TWO OR MORE IMPACTS OVER A THREE YEAR PERIOD.

2. ALL APPLICATIONS REQUIRE THE USE OF A 10:1 SLOPE OR FLATTER TO THE FRONT AND SIDE APPROACHES. USE A 10:2 OR FLATTER SLOPE AT THE REAR OF THE SYSTEM WHEN TRAFFIC ALSO APPROACHES FROM THE REAR OF THE SYSTEM.

3. USE A 4:1 OR FLATTER FILL SLOPE AND A RECOVERY AREA IF IMPRACTICAL, USE A MAXIMUM 3:1 FILL SLOPE AND A RECOVERY AREA ESTABLISHED AT THE TOE OF 3:1 FILL SLOPE. WHEN USED WITH A CUT SLOPE, A 4:1 OR FLATTER CUT IS REQUIRED IN THE RECOVERY AREA.

4. USE A TRANSITION ELEMENT, AS PER MANUFACTURER'S SPECIFICATIONS, WHEN TRAFFIC APPROACHES THE REAR OF SYSTEM.

5. USE MANUFACTURER'S SPECIFICATIONS FOR PAD AND BACKUP REQUIREMENTS.

6. INSTALL PROPER MARKINGS AS PER STD DWG CC 1.

7. MAINTAIN AASHTO CLEAR ZONE REQUIREMENTS.

REVISIONS

NO.	DATE	APPR.	REMARKS

UTAH DEPARTMENT OF TRANSPORTATION
STANDARD DRAWINGS FOR ROAD AND BRIDGE CONSTRUCTION
SALT LAKE CITY, UTAH

RECOMMENDED FOR APPROVAL — JAN.01,2005 DATE
CHAIRMAN STANDARDS COMMITTEE
APPROVED — JAN.01,2005 DATE
DEPUTY DIRECTOR

DETAILS FOR PLACEMENT CRASH CUSHIONS TYPE A, B, AND D

STANDARD DRAWING TITLE

STD DWG
CC 4

DGN File:N:\Esa\Standard.Drawings\Imperial\2005\Approved\Crash Cushions (CC)\cc04.dgn
15-DEC-2004

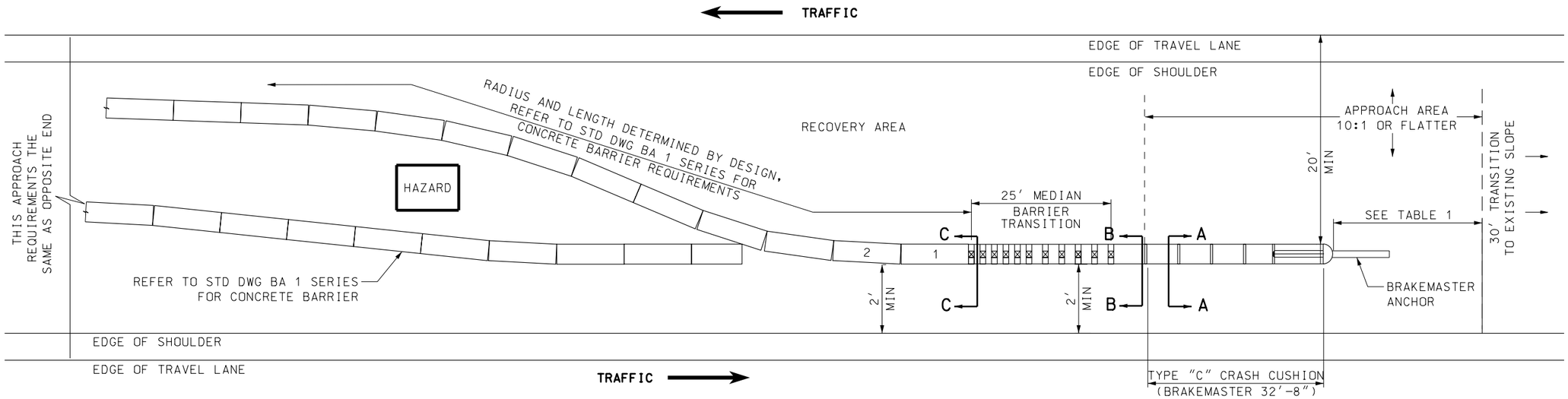

CONCRETE BARRIER INSTALLATION DETAIL

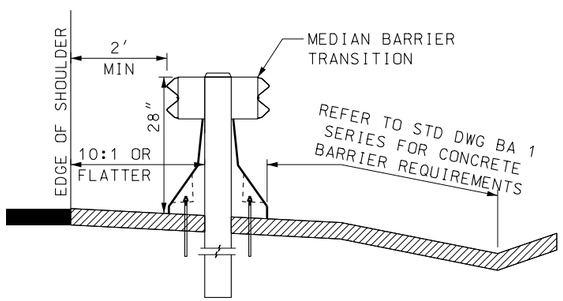

SECTION C-C

PIN BARRIER SECTION 1 AND 2 WITH STABILIZATION PINS

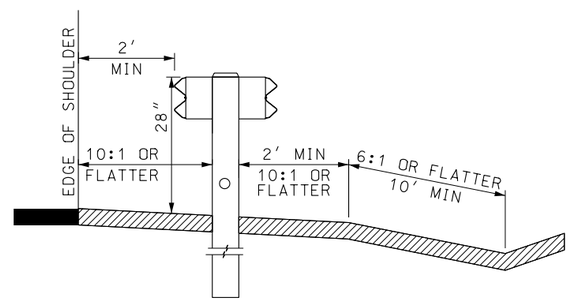

SECTION B-B

DRILL 2" HOLES IN MEDIAN BARRIER TRANSITION OR MEDIAN BARRIER AS SPECIFIED BY MANUFACTURER

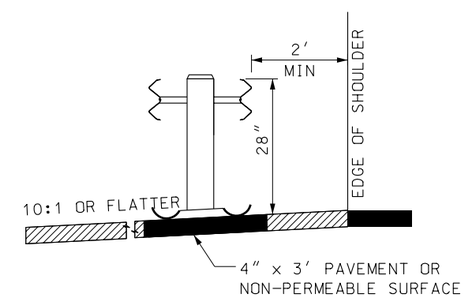

SECTION A-A

TABLE 1	
SPEED MPH	MINIMUM LENGTH FEET
LESS THAN 40	70
40 TO 55	100
60 TO 75	150

W-BEAM GUARDRAIL BARRIER INSTALLATION DETAIL

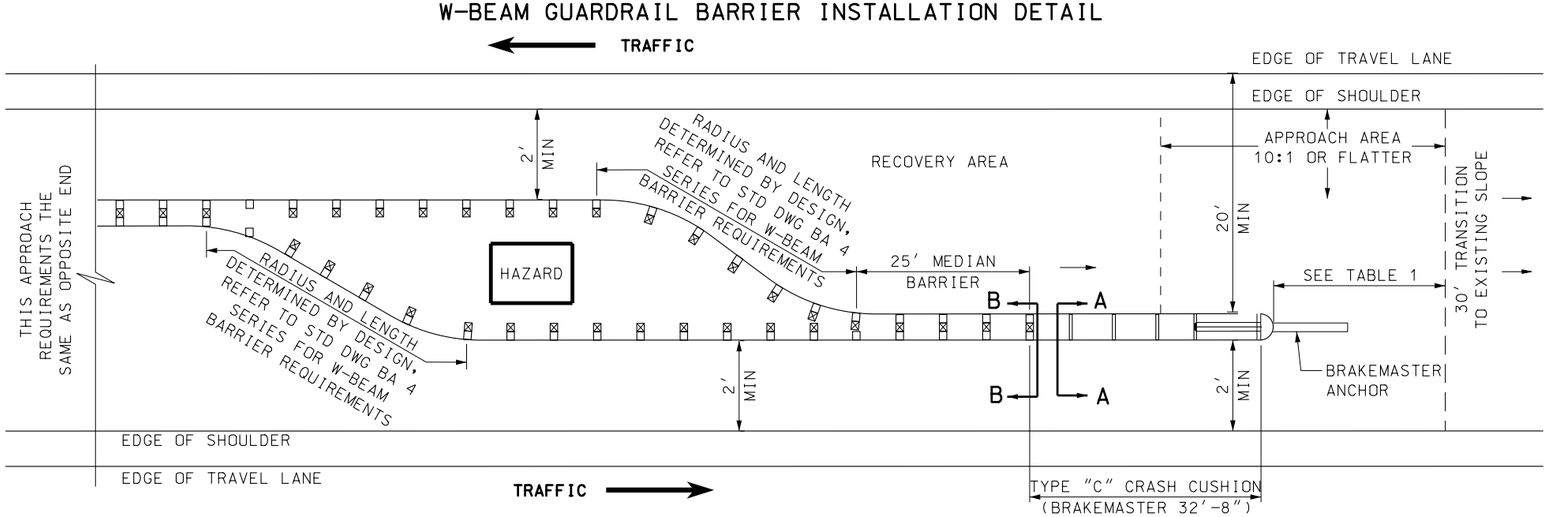

NOTES:

1. THE BRAKEMASTER, MANUFACTURED BY ENERGY ABSORPTION SYSTEM. SEE UDOT'S GUIDELINES FOR SPECIFIC SYSTEM DETAILS.
2. INSTALL SYSTEMS AS PER UDOT'S AND MANUFACTURER'S SPECIFICATIONS.
3. HAVE SHOP DRAWING AVAILABLE ON SITE FOR REFERENCE DURING INSTALLATION.
4. USE 4" NON-PERMEABLE OR PAVED SURFACE FOR BRAKEMASTER SYSTEMS.
5. COMPLETE SLOPE PREPARATION PRIOR TO INSTALLING SYSTEM.
6. CLEAR RECOVERY AND APPROACH AREAS OF ANY FIXED OBJECTS. DO NOT PLACE SIGNS OR POLES IN APPROACH AREA. SIGNS OR POLES PLACED IN THE RECOVERY AREA WILL BE BREAKAWAY AND BE A MINIMUM 10 FEET FROM SYSTEM RAIL ELEMENTS.
7. INSTALL REQUIRED MARKINGS AS PER STD DWG CC 1.

REVISIONS

NO.	DATE	APPR.	REMARKS
1	10-27-05	GS	NEW DRAWING, REPLACES CC 5 WITH CC 5A, 5B, AND 5C.

UTAH DEPARTMENT OF TRANSPORTATION
STANDARD DRAWINGS FOR ROAD AND BRIDGE CONSTRUCTION
SALT LAKE CITY, UTAH

RECOMMENDED FOR APPROVAL — OCT.27,2005 DATE
CHAIRMAN STANDARDS COMMITTEE
APPROVED — OCT.27,2005 DATE
DEPUTY DIRECTOR

GRADING AND PLACEMENT DETAILS CRASH CUSHION TYPE C BRAKEMASTER

STANDARD DRAWING TITLE

STD DWG
CC 5A

DGN File:L:\Standard Drawings\Imperial\2005\Approved\xChange5\Approved\CC05A.dgn
18-NOV-2005

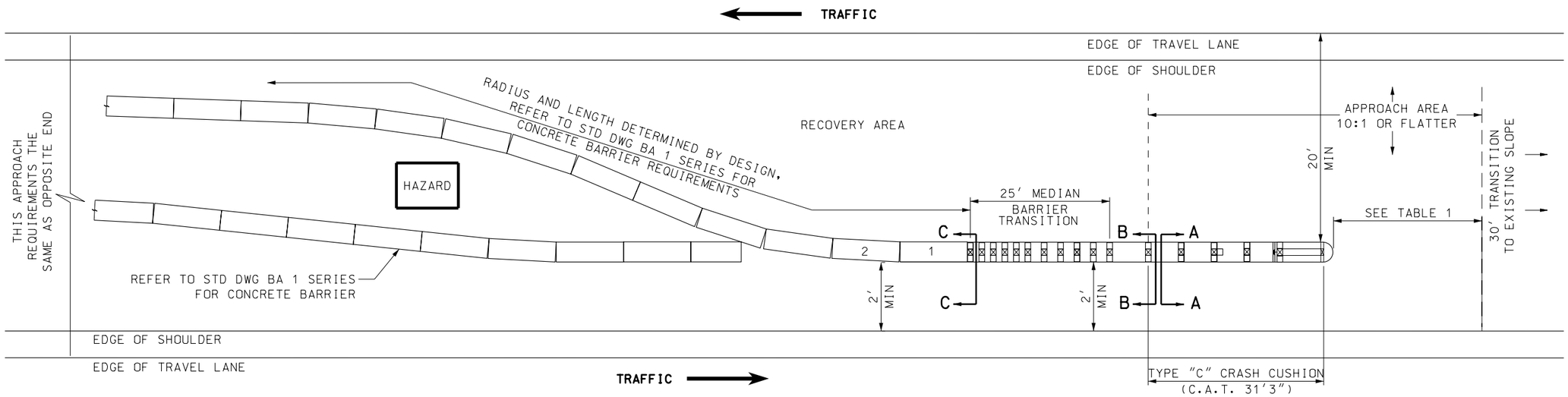

CONCRETE BARRIER INSTALLATION DETAIL

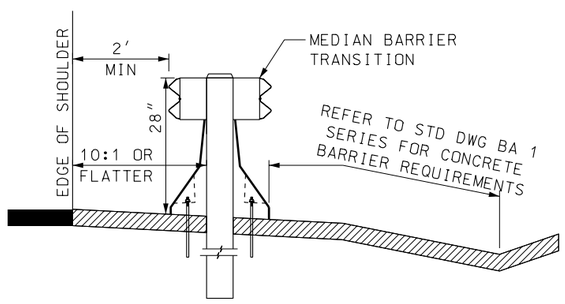

SECTION C–C

PIN BARRIER SECTION 1 AND 2
WITH STABILIZATION PINS

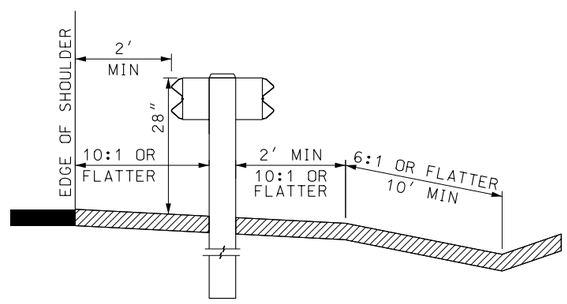

SECTION B–B

DRILL 2" HOLES IN MEDIAN BARRIER TRANSITION
OR MEDIAN BARRIER AS SPECIFIED BY MANUFACTURER

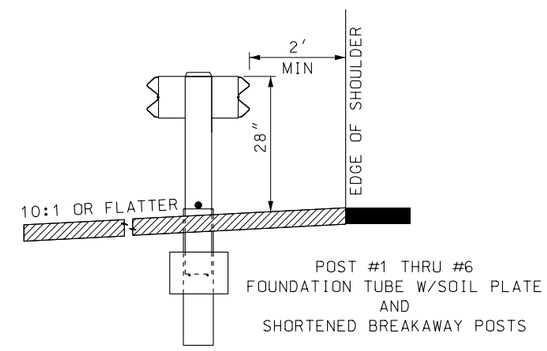

SECTION A–A

TABLE 1	
SPEED MPH	MINIMUM LENGTH FEET
LESS THAN 40	70
40 TO 55	100
60 TO 75	150

W-BEAM GUARDRAIL BARRIER INSTALLATION DETAIL

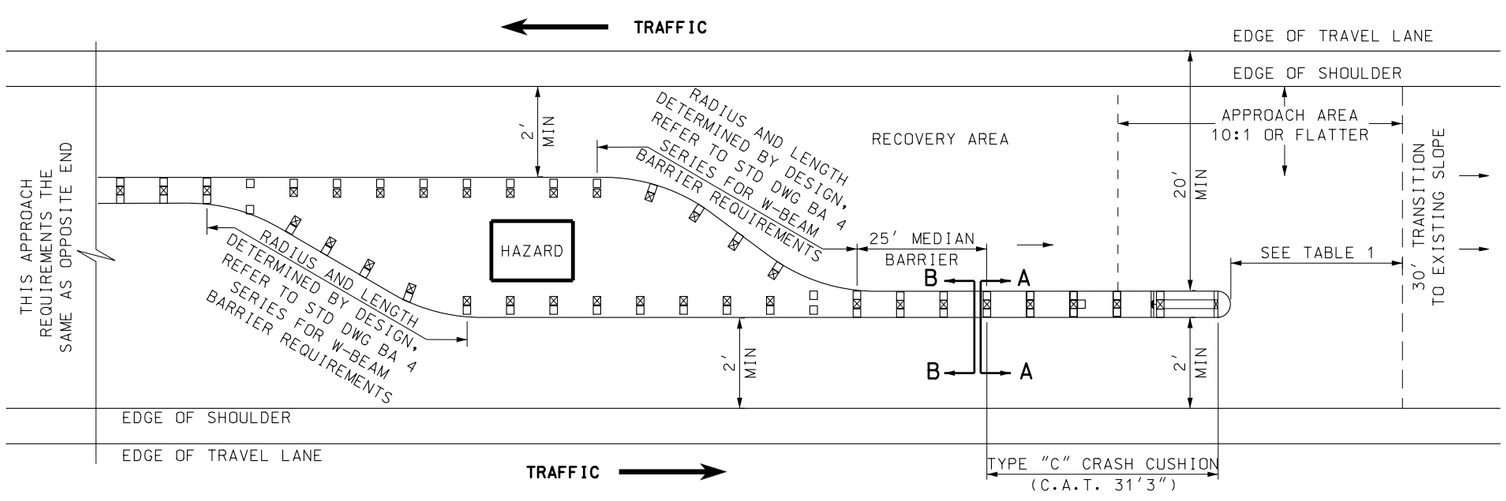

NOTES:

1. THE C.A.T., MANUFACTURED BY TRINITY INDUSTRIES. SEE UDOT'S GUIDELINES FOR CRASH CUSHIONS FOR SPECIFIC SYSTEM DETAILS.
2. INSTALL SYSTEMS AS PER UDOT'S AND MANUFACTURER'S SPECIFICATIONS.
3. HAVE SHOP DRAWING AVAILABLE ON SITE FOR REFERENCE DURING INSTALLATION.
4. USE GRADED AND COMPACTED SURFACE FOR C.A.T. SYSTEMS.
5. COMPLETE SLOPE PREPARATION PRIOR TO INSTALLING SYSTEM.
6. CLEAR RECOVERY AND APPROACH AREAS OF ANY FIXED OBJECTS. DO NOT PLACE SIGNS OR POLES IN APPROACH AREA. SIGNS OR POLES PLACED IN THE RECOVERY AREA WILL BE BREAKAWAY AND BE A MINIMUM 10 FEET FROM SYSTEM RAIL ELEMENTS.
7. INSTALL REQUIRED MARKINGS AS PER STD DWG CC 1.

REVISIONS

NO.	DATE	APPR.	REMARKS
1	10-27-05	GS	NEW DRAWING, REPLACES CC 5 WITH CC 5A, 5B, AND 5C.

UTAH DEPARTMENT OF TRANSPORTATION
STANDARD DRAWINGS FOR ROAD AND BRIDGE CONSTRUCTION
SALT LAKE CITY, UTAH

RECOMMENDED FOR APPROVAL — OCT.27,2005 DATE
CHAIRMAN STANDARDS COMMITTEE
APPROVED — OCT. 27,2005 DATE
DEPUTY DIRECTOR

GRADING AND PLACEMENT DETAILS CRASH CUSHION TYPE C C.A.T.

STANDARD DRAWING TITLE

STD DWG
CC 5B

DGN File: L:\Standard Drawings\Imperial\2005Approved\x-Changes\Approved\CC05B.dgn
10-NOV-2005

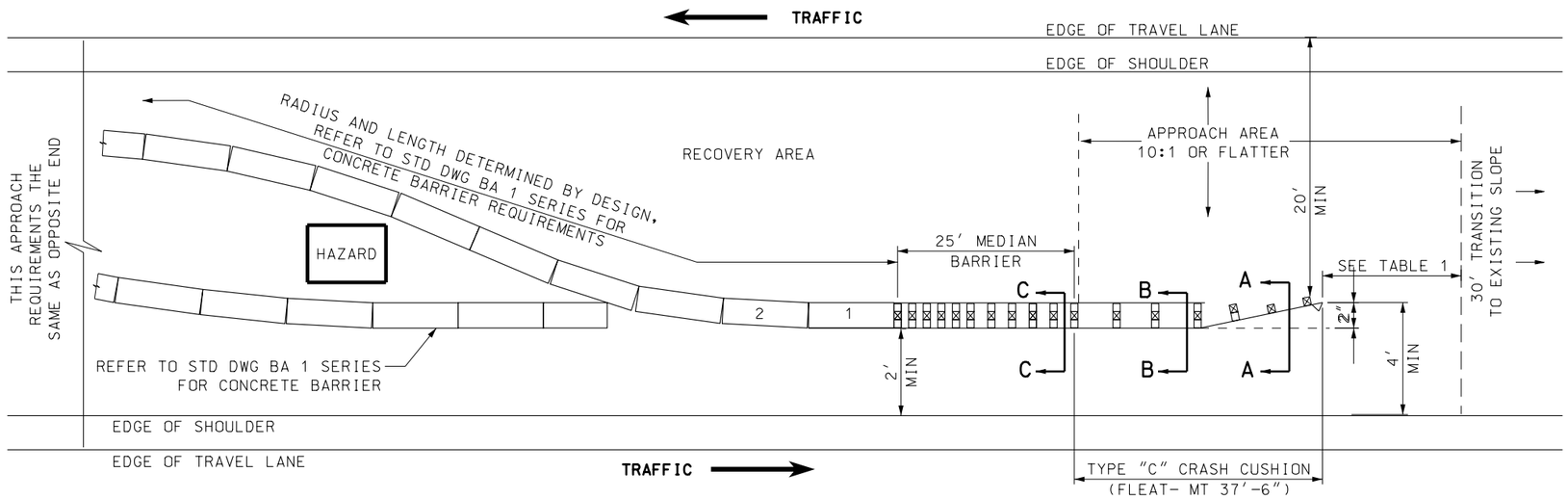

CONCRETE BARRIER INSTALLATION DETAIL

TABLE 1	
SPEED MPH	MINIMUM LENGTH FEET
LESS THAN 40	70
40 TO 55	100
60 TO 75	150

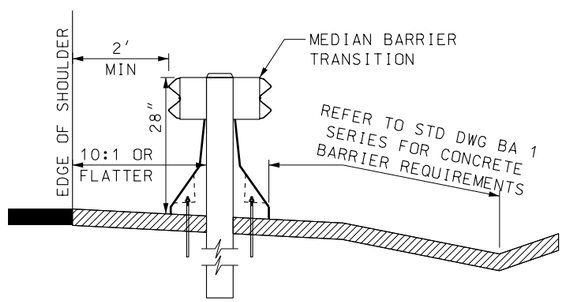

SECTION C-C
PIN BARRIER SECTION 1 AND 2
WITH STABILIZATION PINS

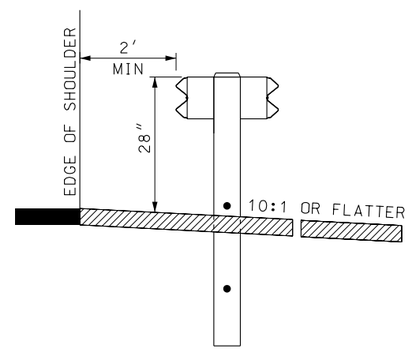

SECTION B-B
DRILL 2" HOLES IN MEDIAN BARRIER TRANSITION
OR MEDIAN BARRIER AS SPECIFIED BY MANUFACTURER

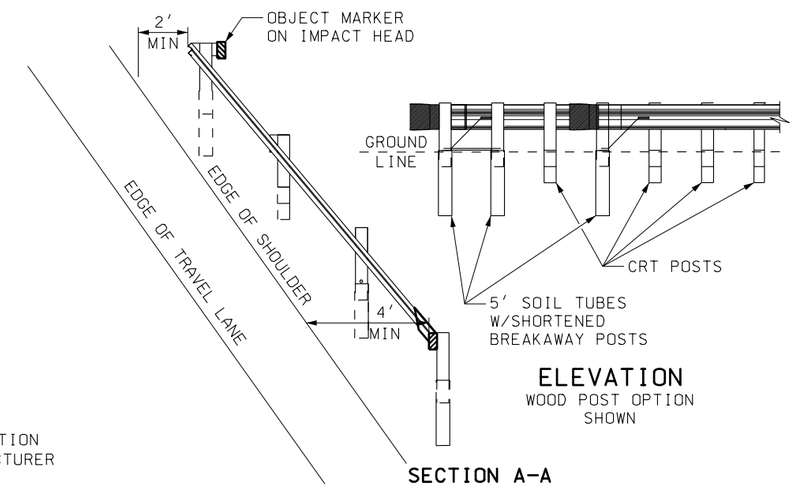

W-BEAM GUARDRAIL BARRIER INSTALLATION DETAIL

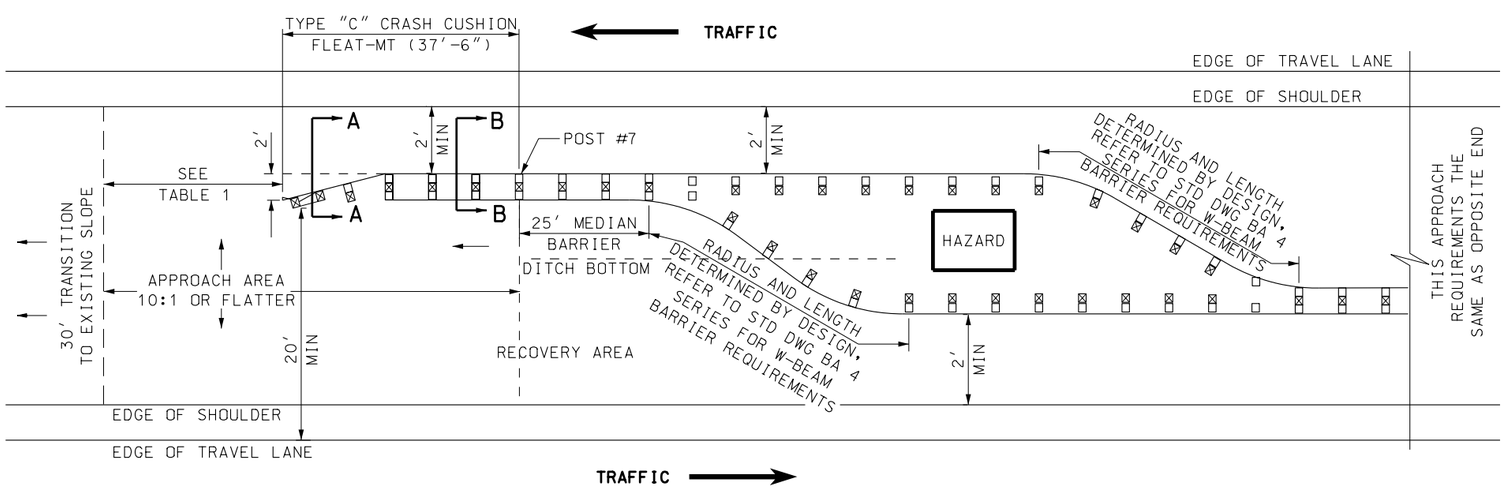

NOTES:

1. THE FLEAT-MT, MANUFACTURED BY ROAD SYSTEMS INC. SEE UDOT'S GUIDELINES FOR SPECIFIC SYSTEM DETAILS.
2. INSTALL SYSTEMS AS PER UDOT'S AND MANUFACTURER'S SPECIFICATIONS.
3. REFER TO UDOT'S GUIDELINES FOR CRASH CUSHIONS FOR APPROVED POST OPTIONS.
4. HAVE SHOP DRAWING AVAILABLE ON SITE FOR REFERENCE DURING INSTALLATION.
5. USE GRADED AND COMPACT SURFACE FOR FLEAT-MT SYSTEMS.
6. COMPLETE SLOPE PREPARATION PRIOR TO INSTALLING SYSTEM.
7. CLEAR RECOVERY AND APPROACH AREAS OF ANY FIXED OBJECTS. DO NOT PLACE SIGNS OR POLES IN APPROACH AREA. SIGNS OR POLES PLACED IN THE RECOVERY AREA WILL BE BREAKAWAY AND BE A MINIMUM 10 FEET FROM SYSTEM RAIL ELEMENTS.
8. INSTALL REQUIRED MARKINGS AS PER STD DWG CC 1 AND THIS DRAWING.

REVISIONS

NO.	DATE	APPR.	REMARKS
1	10-27-05	GS	NEW DRAWING, REPLACES CC 5 WITH CC 5A, 5B, AND 5C.

UTAH DEPARTMENT OF TRANSPORTATION
STANDARD DRAWINGS FOR ROAD AND BRIDGE CONSTRUCTION
SALT LAKE CITY, UTAH

RECOMMENDED FOR APPROVAL — OCT.27,2005 DATE
CHAIRMAN STANDARDS COMMITTEE APPROVED — OCT.27,2005 DATE
DEPUTY DIRECTOR

GRADING AND PLACEMENT DETAILS CRASH CUSHION TYPE C FLEAT-MT
STANDARD DRAWING TITLE

STD DWG
CC 5C

DGN File: L:\Standard Drawings\Imperial\2005Approved\x-Changes\Approved\CC05C.dgn
10-NOV-2005

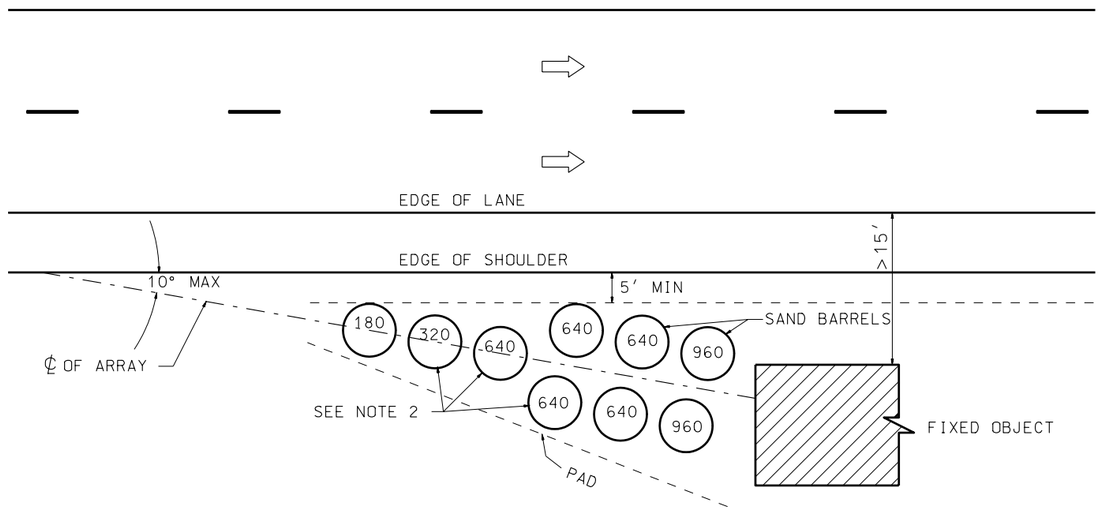

FOR ILLUSTRATION ONLY
ACTUAL DESIGNS WILL BE SITE SPECIFIC
SEE NOTE 3

NOTES:

1. PAVE PAD WITH HOT MIX ASPHALT OR PORTLAND CEMENT CONCRETE.
2. MARK BARREL POSITION AND THE REQUIRED SAND WEIGHT FOR EACH BARREL POSITION ON THE PAVED SURFACE. USE FLUORESCENT ORANGE FOR THIS MARKING.
3. USE ENERGITE III SYSTEMS MANUAL TO GET REQUIRED DESIGN CRITERIA. MANUAL AVAILABLE FROM THE DIVISION OF TRAFFIC AND SAFETY.
4. INSTALL REQUIRED MARKING AS PER STD DWG CC 1

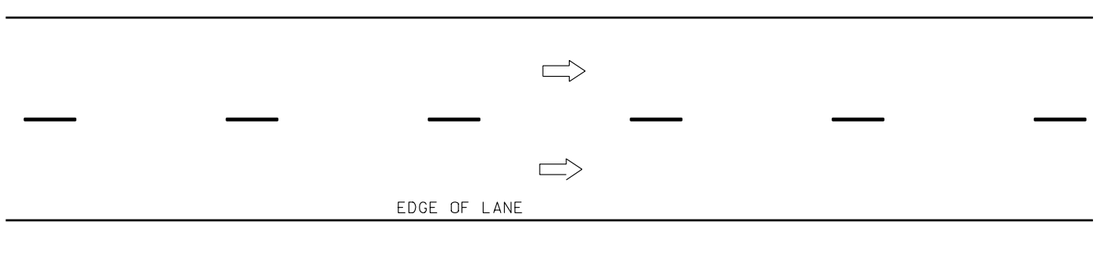

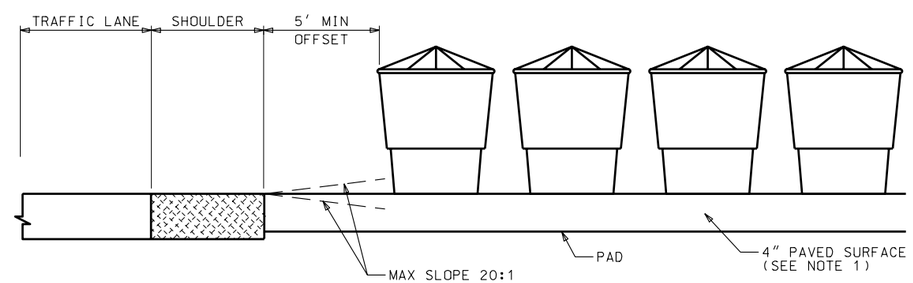

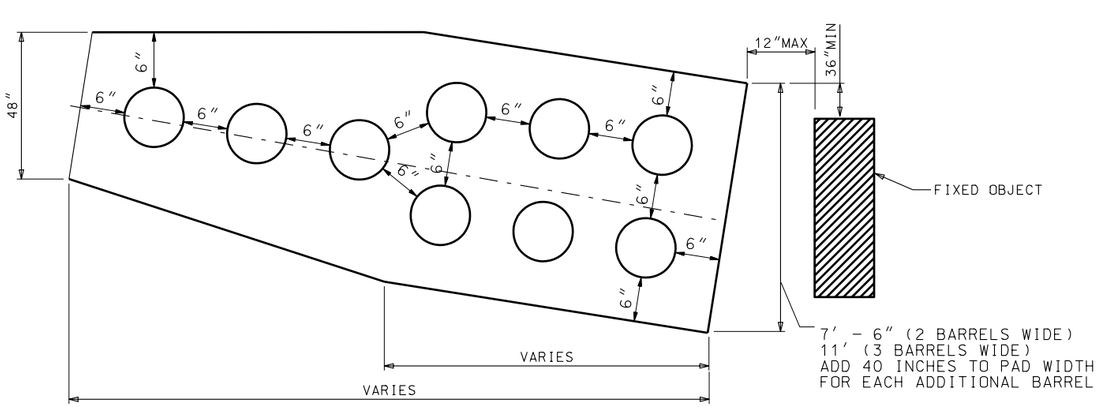

NO.	DATE	APPR.	REMARKS

REVISIONS

UTAH DEPARTMENT OF TRANSPORTATION
STANDARD DRAWINGS FOR ROAD AND BRIDGE CONSTRUCTION
SALT LAKE CITY, UTAH

RECOMMENDED FOR APPROVAL — JAN.01,2005 DATE
CHAIRMAN STANDARDS COMMITTEE APPROVED — JAN.01,2005 DATE
DEPUTY DIRECTOR

CRASH CUSHION
TYPE E
SAND BARREL
DETAILS

STANDARD DRAWING TITLE

STD DWG
CC 6

DGN File:N:\Esd\Standard_Drawings\Imperial\2005Approved\Crash Cushions (CC)\cc06.dgn
15-DEC-2004

CRASH CUSHION TYPE F

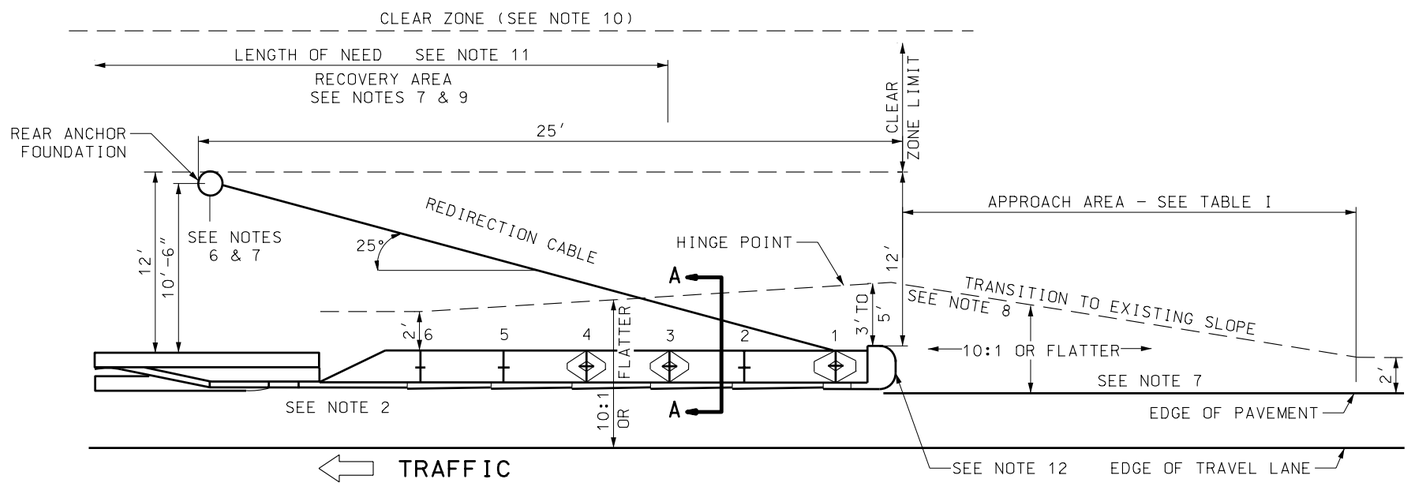

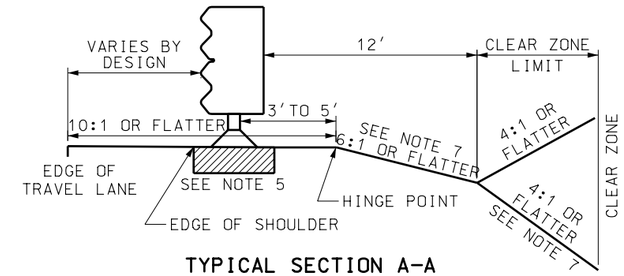

TYPICAL SECTION A-A

TABLE 1	
SPEED MPH	TAPER
LESS THAN 40	7:1
40 TO 55	10:1
60 TO 75	15:1

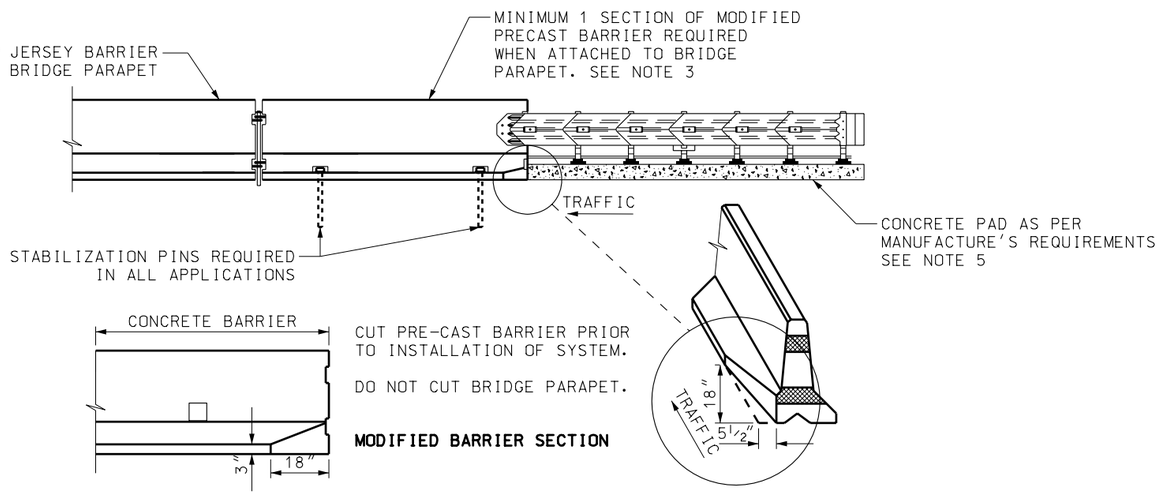

USE THIS DETAIL WHEN SYSTEM IS INSTALLED WITH NEW JERSEY SHAPED BARRIER

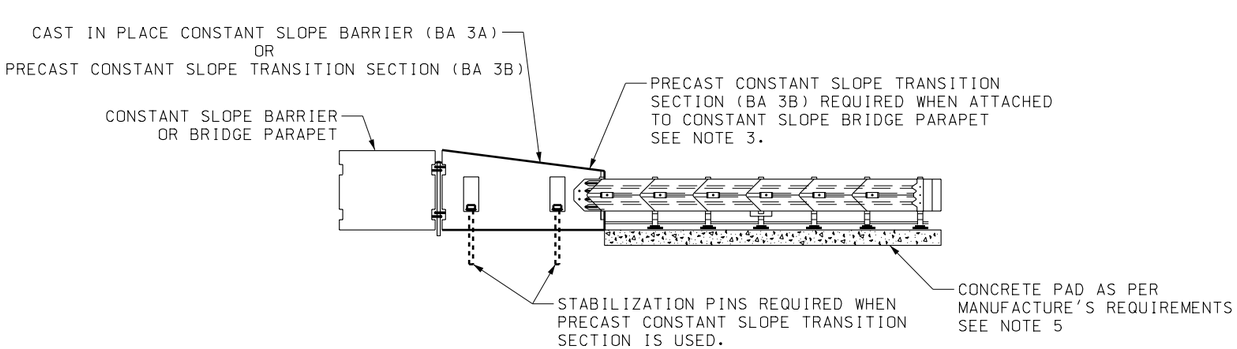

USE THIS DETAIL WHEN SYSTEM IS INSTALLED WITH CONSTANT SLOPE BARRIER

NOTES FOR CRASH CUSHION TYPE F

1. THE QUADTREND-350 IS MANUFACTURED BY ENERGY ABSORPTION SYSTEMS, SEE UDOT'S GUIDELINES FOR CRASH CUSHIONS FOR SPECIFIC SYSTEM DETAILS.

2. USE SYSTEM WHEN DIRECT ATTACHMENT TO BARRIER IS REQUIRED AND THE LONGITUDINAL SPACE IN FRONT OF THE HAZARD IS EQUAL TO THE REQUIRED MINIMUM LENGTH AS STATED IN TABLE 1. INSTALL SYSTEM AS PER UDOT'S AND MANUFACTURER'E SPECIFICATIONS.

3. CUT PRE-CAST NEW JERSEY BARRIER AS PER DETAIL. PRIOR TO INSTALLATION OF SYSTEM. SEAL CUT WITH THE SAME TYPE OF SEALER USED ON BARRIER. DO NOT CUT BRIDGE PARAPET,
   INSTALL 1 SECTION OF A PRECAST BARRIER, CUT AS PER DETAIL.
   INSTALL STABILIZATION PINS IN BARRIER SECTION.
   CONSTANT SLOPE BARRIER OR CONSTANT SLOPE BARRIER TRANSITION DOES NOT NEED MODIFICATION. THE REQUIRED BARRIER SECTIONS ARE A SEPARATE PAY ITEM FROM THE CRASH CUSHION.

4. HAVE SHOP DRAWING AVAILABLE ON SITE FOR REFERENCE DURING INSTALLATION.

5. INSTALL CONCRETE PAD AS PER MANUFACTURER'S REQUIREMENTS.

6. PLACE CABLE ANCHOR FOUNDATION IN SUCH A MANNER THAT THE REDIRECTING CABLE LAYS 6:1 OR FLATTER ON TOP OF THE GROUND, AND THE FOUNDATION WITH THE CABLE ANCHOR BRACKET ATTACHED DOES NOT EXCEED 4 INCHES ABOVE GROUND LEVEL. DO NOT BURY REDIRECTION CABLE.

7. COMPLETE SLOPE PREPARATION PRIOR TO INSTALLING SYSTEM.
   A. USE A 10:1 OR FLATTER SLOPE IN APPROACH AREA.
   B. A FORESLOPE AREA OF 12 FOOT x 25 FOOT AT 6:1 OR FLATTER REQUIRED FOR REAR ANCHOR FOUNDATION INSTALLATION
   C. USE A 4:1 OR FLATTER FORESLOPE IN RECOVERY AREA, AFTER REAR ANCHOR SLOPES HAVE BEEN ESTABLISHED
      1) IF A 4:1 FORESLOPE IS IMPRACTICAL USE A MAXIMUM 3:1 FORESLOPE IN RECOVERY AREA. ESTABLISH RECOVERY AREA AT THE TOE OF THE 3:1 FORESLOPE OF 4:1 OR FLATTER.
   D. USE OF 4:1 BACKSLOPE TO CLEAR ZONE LIMIT IN RECOVERY AREA PERMITTED ONLY AFTER THE REAR ANCHOR FORESLOPE S HAVE BEEN ESTABLISHED. IF A 4:1 BACKSLOPE IS IMPRACTICAL A 3:1 IS PERMITTED.

8. CONSTRUCT PLATFORM AS REQUIRED EVEN IF THE PLATFORM EXTENDS BEYOND THE CLEAR ZONE.

9. CLEAR THE RECOVERY AND APPROACH AREAS OF ANY FIXED OBJECTS.
   A. DO NOT PLACE SIGNS OR POLES IN APPROACH AREA.
   B. USE BREAKAWAY SIGNS OR POLES WHEN PLACED IN RECOVERY AREA. MAINTAIN A MINIMUM 10 FOOT CLEARANCE TO THE SIDES AND REAR OF SYSTEM.

10 . ATTACH SAND CONTAINERS AT POSTS 1, 3 AND 4.

11. USE CURRENT EDITION OF ROADSIDE DESIGN GUIDE TO ESTABLISH CLEAR ZONE AND LENGTH OF NEED (LON) REQUIREMENTS.

12. INSTALL REQUIRED MARKING AS PER STD DWG CC 1.

REVISIONS

NO.	DATE	APPR.	REMARKS
1	2-24-05	GS	ADDED BARRIER MODIFICATION DETAILS. MODIFIED RECOVERY AREA REQUIREMENTS, REVISED NOTES AND TABLE 1. PREVIOUSLY CC 7.

UTAH DEPARTMENT OF TRANSPORTATION
STANDARD DRAWINGS FOR ROAD AND BRIDGE CONSTRUCTION
SALT LAKE CITY, UTAH

RECOMMENDED FOR APPROVAL — FEB.24,2005 DATE
CHAIRMAN STANDARDS COMMITTEE
APPROVED — FEB.24,2005 DATE
DEPUTY DIRECTOR

GRADING AND INSTALLATION DETAILS
CRASH CUSHION TYPE F
QUAD TREND 350
STANDARD DRAWING TITLE

STD DWG
CC 7A

DGN File: N:\Eng\Standard Drawings\Imperial\2005Approved\xChanges\Approved\CC07A.dgn
14-MAR-2005

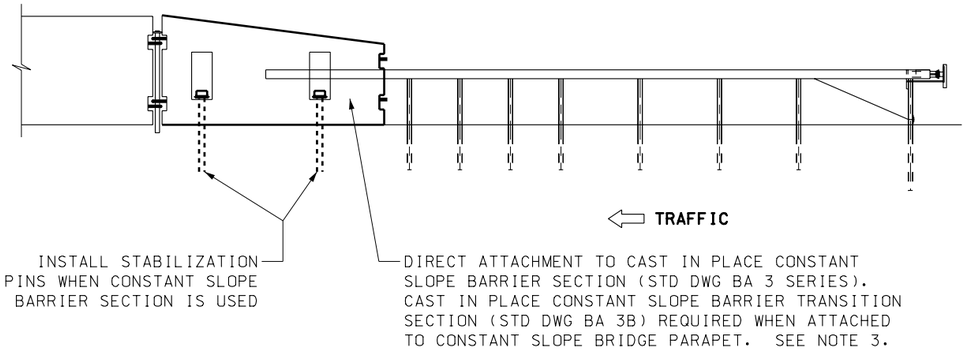

DETAIL WHEN SYSTEM IS INSTALLED WITH CONSTANT SLOPE BARRIER

(GROUND MOUNTED POST SHOWN, SURFACE MOUNTED STEEL BREAKAWAY POST ACCEPTABLE, SEE NOTE 4)

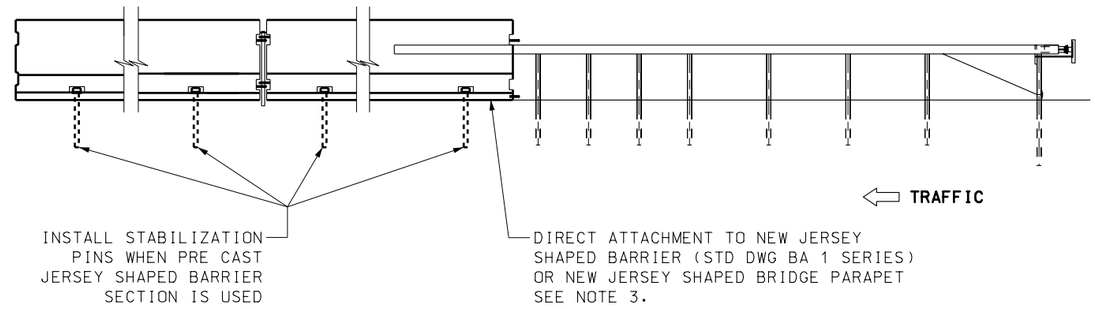

DETAIL WHEN SYSTEM IS INSTALLED WITH NEW JERSEY SHAPED BARRIER

(GROUND MOUNTED STEEL BREAKAWAY POST SHOWN SURFACE MOUNTED POSTS ACCEPTABLE, SEE NOTE 4)

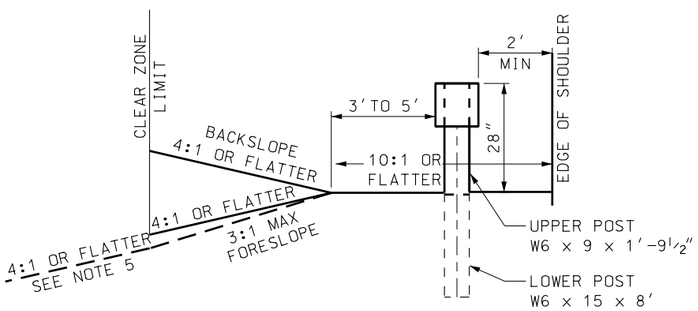

SECTION A-A

POST 1

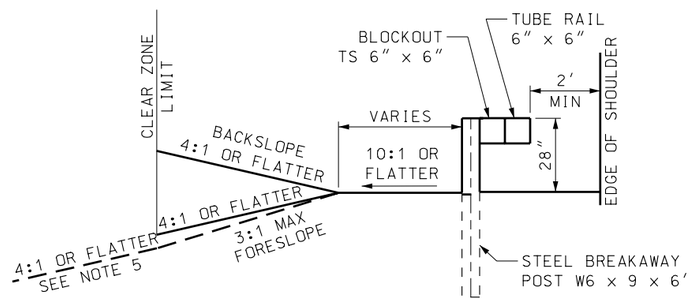

SECTION B-B

POSTS 2 TO POST 6

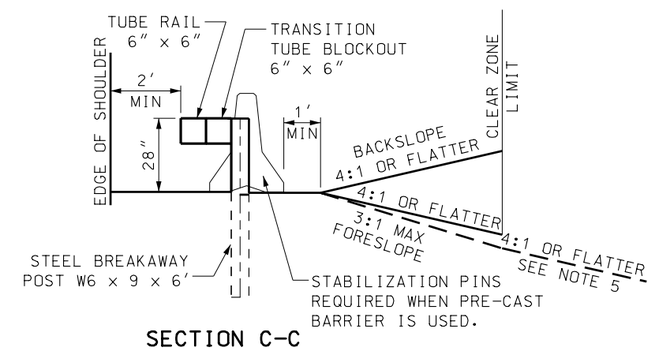

SECTION C-C

POSTS 7-8

TABLE 1	
SPEED MPH	TAPER
LESS THAN 40	7:1
40 TO 55	10:1
60 TO 75	15:1

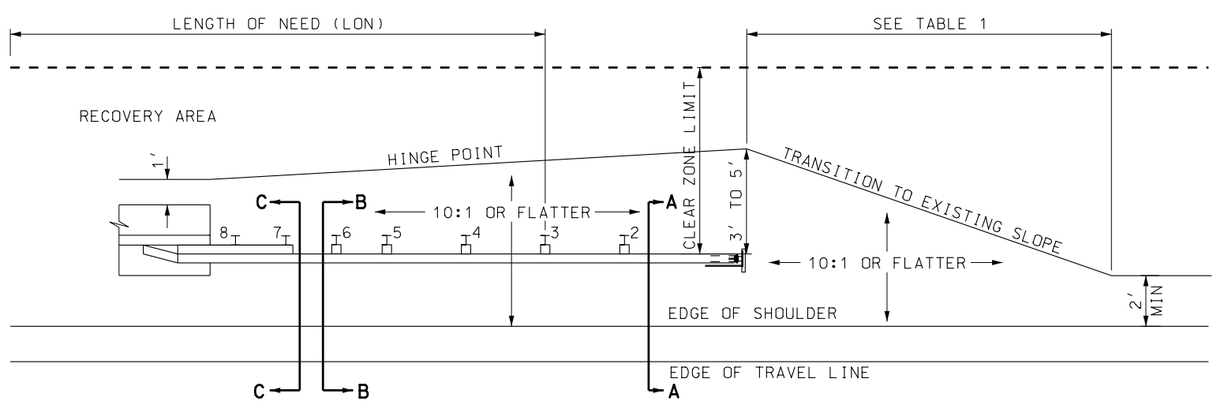

NOTES FOR CRASH CUSHION TYPE F

1. THE BEAT-SSCC, MANUFACTURED BY ROAD SYSTEMS INC. SEE UDOT'S GUIDELINES FOR CRASH CUSHIONS FOR SPECIFIC SYSTEM DETAILS.
2. USE SYSTEM WHEN DIRECT ATTACHMENT TO BARRIER IS REQUIRED AND THERE IS LESS THAN 125 FEET OF LONGITUDINAL SPACE IN FRONT OF THE HAZARD. INSTALL SYSTEM AS PER UDOT'S AND MANUFACTURER'S SPECIFICATIONS.
3. ATTACH SYSTEM TRANSITION TO BARRIER OR BRIDGE PARAPET AS PER MANUFACTURER'S REQUIREMENTS.
4. HAVE SHOP DRAWING AVAILABLE ON SITE FOR REFERENCE DURING INSTALLATION.
5. THE BEAT-SSCC REQUIRES A GRADED AND COMPACTED SURFACE WHEN GROUND MOUNTED POSTS ARE USED. SURFACE MOUNTED POST OPTIONAL, USE MANUFACTURER'S SPECIFICATIONS FOR CONCRETE PAD, POSTS AND MOUNTING HARDWARE.
6. COMPLETE SLOPE PREPARATION PRIOR TO INSTALLING SYSTEM.
   A. USE 10:1 OR FLATTERSLOPES IN APPROACH AREA.
   B. USE 4:1 OR FLATTER FORESLOPE OR BACKSLOPE IN THE RECOVERY AREA.
      1) IF A 4:1 FORESLOPE IN RECOVERY AREA IS IMPRACTICAL USE A RECOVERY AREA AT THE TOE OF THE 3:1 FORESLOPE OF 4:1 OR FLATTER.
      2) MAXIMUM 4:1 BACKSLOPE TO THE CLEAR ZONE LIMIT IN THE RECOVERY AREA.
7. CLEAR RECOVERY AND APPROACH AREAS OF ANY FIXED OBJECTS.
   A. DO NOT PLACE SIGNS OR POLES IN APPROACH AREA.
   B. USE BREAKAWAY SIGNS OR POLES WHEN PLACED IN RECOVERY AREA. MAINTAIN A MINIMUM 10 FOOT CLEARANCE TO SYSTEM.
8. INSTALL REQUIRED MARKING AS PER STD DWG CC 1, TYPE G.
9. REFER TO THE CURRENT EDITION OF THE AASHTO ROADSIDE DESIGN GUIDE TO DETERMINE LENGTH OF NEED (LON) AND CLEAR ZONE REQUIREMENTS.

REVISIONS

NO.	DATE	APPR.	REMARKS
1	08/25/05	G.S.	NEW DRAWING.

UTAH DEPARTMENT OF TRANSPORTATION
STANDARD DRAWINGS FOR ROAD AND BRIDGE CONSTRUCTION
SALT LAKE CITY, UTAH

RECOMMENDED FOR APPROVAL — AUG.25,2005 DATE
CHAIRMAN STANDARDS COMMITTEE APPROVED — AUG.25,2005 DATE
DEPUTY DIRECTOR

CRASH CUSHION TYPE F BEAT-SSCC

STANDARD DRAWING TITLE

STD DWG CC 7B

DGN File:L:\Standard Drawings\Imperial\2005\Approved\x\Change4\Approved\CC07B.dgn
06-SEP-2005

CRASH CUSHION TYPE G

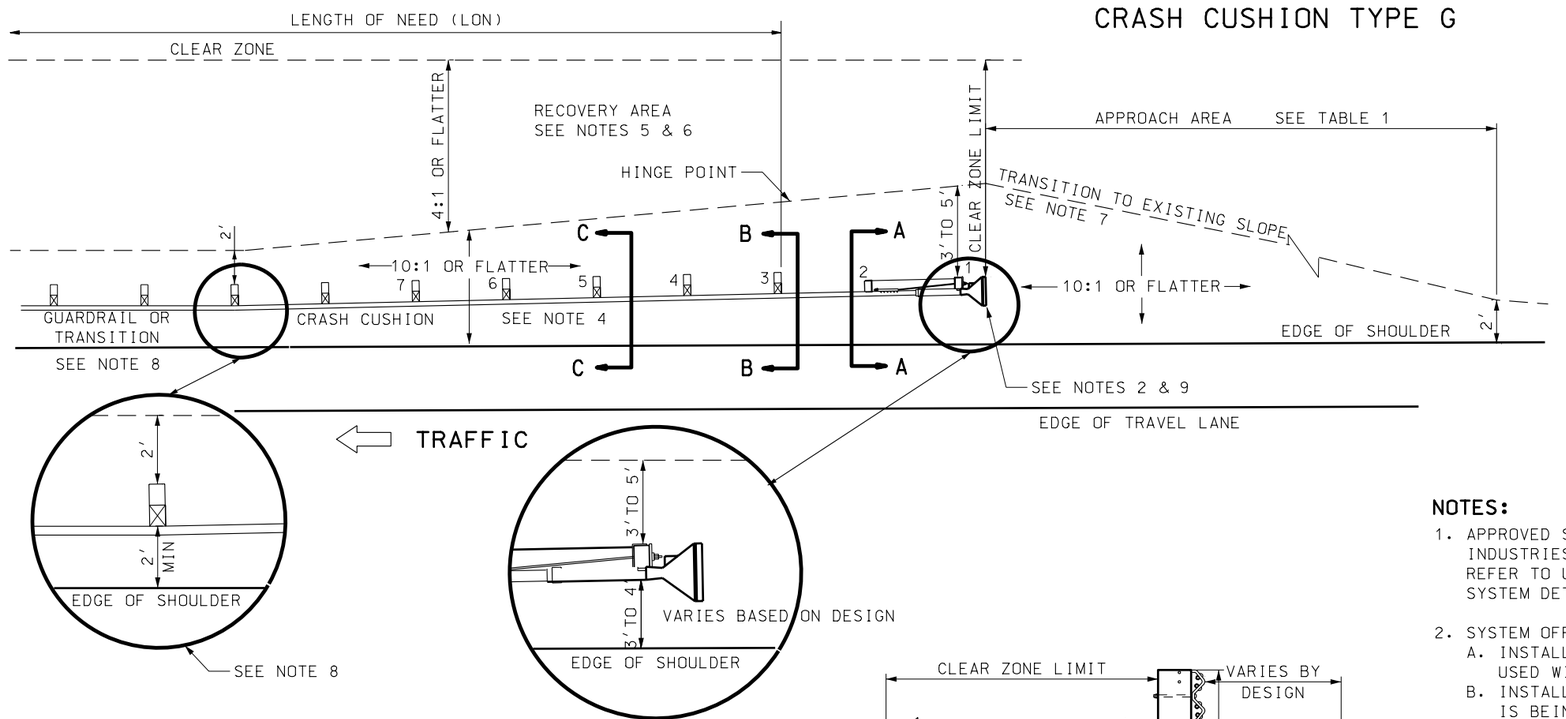

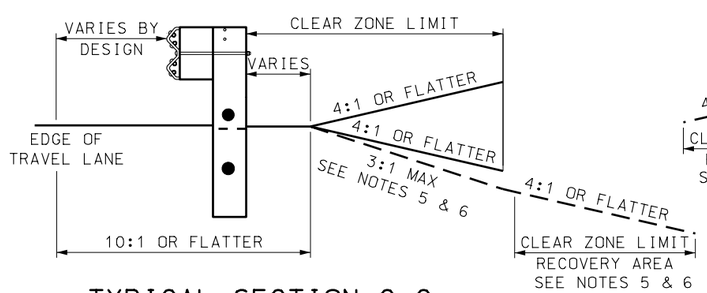

TYPICAL SECTION C-C
POSTS 5-8

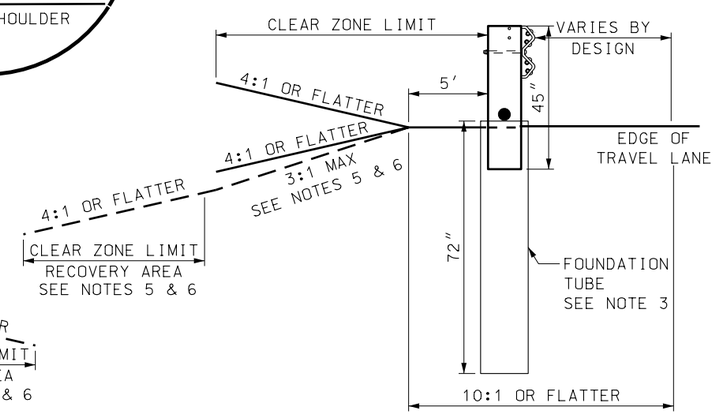

TYPICAL SECTION A-A
POSTS 1-2

TABLE 1	
SPEED MPH	TAPER
LESS THAN 40	7:1
40 TO 55	10:1
60 TO 75	15:1

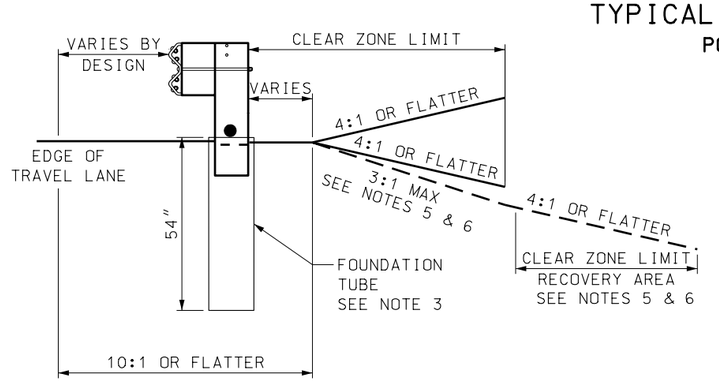

TYPICAL SECTION B-B
POSTS 3-4

NOTES:

1. APPROVED SYSTEMS: ET-2000 AND ET-PLUS MANUFACTURED BY TRINITY INDUSTRIES AND THE SKT-350, MANUFACTURED BY ROAD SYSTEMS INC. REFER TO UDOT'S GUIDELINES FOR CRASH CUSHIONS FOR SPECIFIC SYSTEM DETAILS.

2. SYSTEM OFFSET:
   A. INSTALL SYSTEM WITH 1 FOOT OFFSET (50:1 FLARE RATE) WHEN USED WITH A TANGENT BARRIER SYSTEM.
   B. INSTALL SYSTEM AT THE SAME FLARE RATE AS THE BARRIER IT IS BEING ATTACHED TO.

3. POST OPTIONS: REFER TO UDOT'S GUIDELINES FOR CRASH CUSHION FOR APPROVED POST OPTIONS.

4. RAIL ELEMENTS
   A. USE 12½ FOOT RAIL ELEMENTS AS SPECIFIED BY THE SYSTEM MANUFACTURER.
   B. DO NOT BOLT RAIL ELEMENT AT POST 1.
   C. REFER TO MANUFACTURE SPECIFICATIONS FOR OTHER RAIL TO POST BOLT REQUIREMENTS.

5. COMPLETE SLOPE PREPARATION PRIOR TO INSTALLING SYSTEM.
   A. USE 10:1 OR FLATTER SLOPES IN APPROACH AREA.
   B. USE 4:1 OR FLATTER FORESLOPE OR BACKSLOPE IN THE RECOVERY AREA.
      1) IF A 4:1 FORESLOPE IN RECOVERY AREA IS IMPRACTICAL USE A MAXIMUM 3:1 FORESLOPE. ESTABLISH A RECOVERY AREA AT THE TOE OF THE 3:1 FORESLOPE OF 4:1 OR FLATTER.
   C. USE A 4:1 BACKSLOPE TO THE CLEAR ZONE LIMIT IN THE RECOVERY AREA. IF A 4:1 BACKSLOPE CANNOT BE ESTABLISHED A 3:1 BACKSLOPE IS PERMITTED.

6. CLEAR RECOVERY AND APPROACH AREAS OF ANY FIXED OBJECTS.
   A. DO NOT PLACE SIGNS OR POLES IN APPROACH AREA.
   B. USE BREAKAWAY SIGNS OR POLES WHEN PLACED IN RECOVERY AREA, AND MAINTAIN A MINIMUM 10 FOOT CLEARANCE TO THE SIDES AND REAR OF THE SYSTEM.

7. CONSTRUCT PLATFORM AS REQUIRED WHEN THE SPACE IS AVAILABLE EVEN IF THE PLATFORM EXTENDS BEYOND THE CLEAR ZONE REQUIREMENTS. SEE STD DWG CC8B FOR EXCEPTIONS.

8. USE GUARDRAIL TRANSITION, STD DWG BA 4 SERIES, WHEN ATTACHING SYSTEM TO CONCRETE BARRIER OR BRIDGE PARAPET.

9. INSTALL REQUIRED MARKINGS AS PER STD DWG CC 1.

10. USE THE CURRENT EDITION, ROADSIDE DESIGN GUIDE TO ESTABLISH CLEAR ZONE REQUIREMENT AND LENGTH OF NEED (LON) REQUIREMENTS.

REVISIONS

NO.	DATE	APPR.	REMARKS
1	02/24/05	GS	MODIFIED RECOVERY AREA REQUIREMENTS, REVISED NOTES AND TABLE 1.
2	04/28/05	GS	REISSUED TO CORRECT OVERSIGHT.

UTAH DEPARTMENT OF TRANSPORTATION
STANDARD DRAWINGS FOR ROAD AND BRIDGE CONSTRUCTION
SALT LAKE CITY, UTAH

RECOMMENDED FOR APPROVAL — APR.28,2005 DATE
CHAIRMAN STANDARDS COMMITTEE APPROVED — APR.28,2005 DATE
DEPUTY DIRECTOR

STANDARD DRAWING TITLE
GRADING AND INSTALLATION DETAILS CRASH CUSHION TYPE G

STD DWG
CC 8A

DGN File: L:\Standard Drawings\Imperial\2005Approved\xChange2Approved\CC08A.dgn
19-MAY-2005

CRASH CUSHION TYPE G

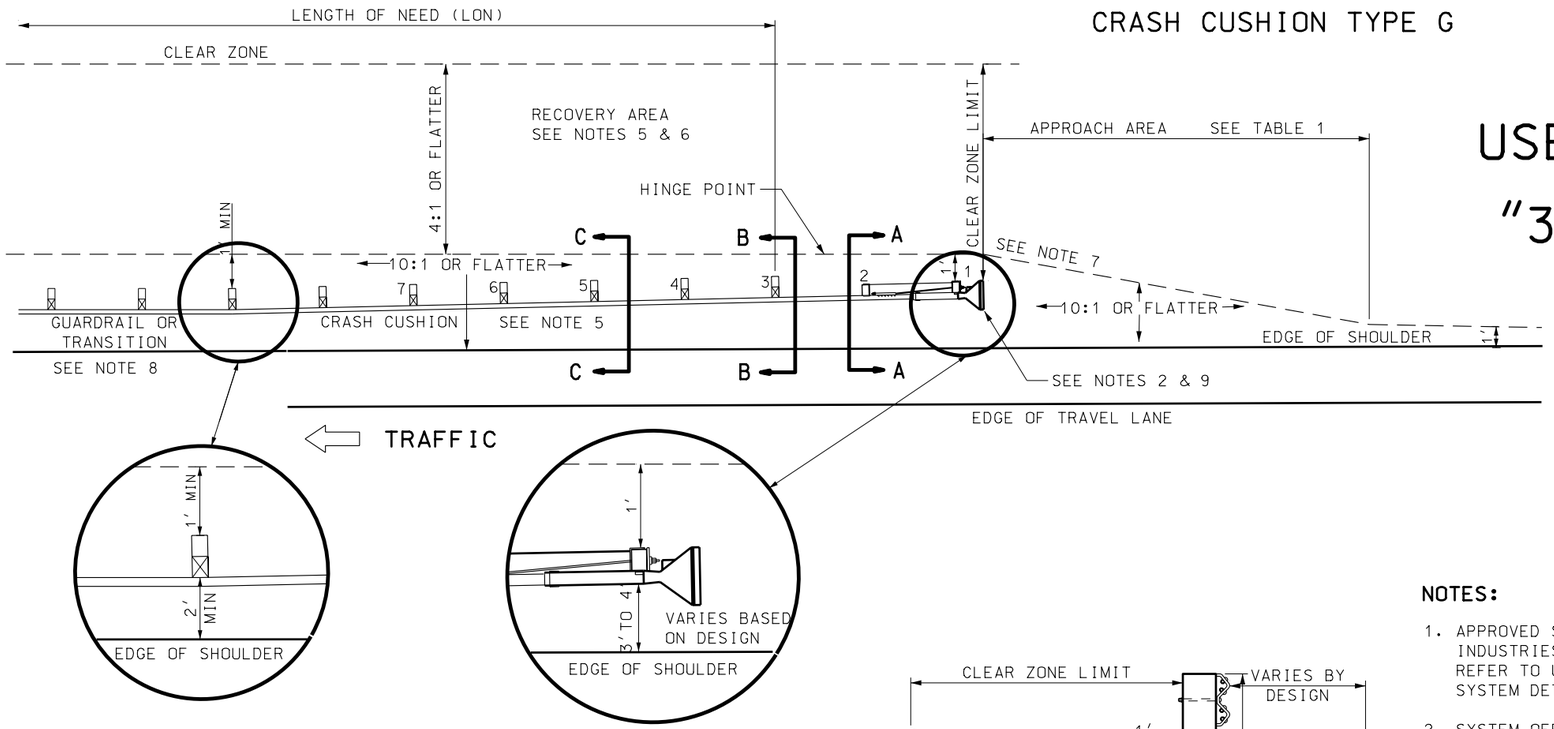

USE THIS DETAIL FOR "3R" PROJECTS ONLY

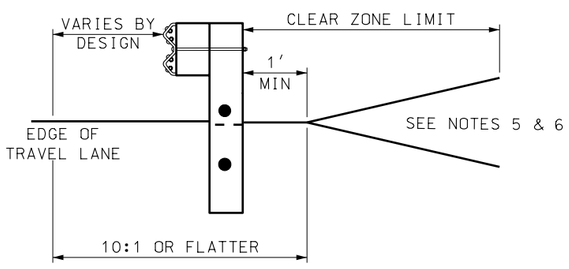

TYPICAL SECTION C-C
POSTS 5-8

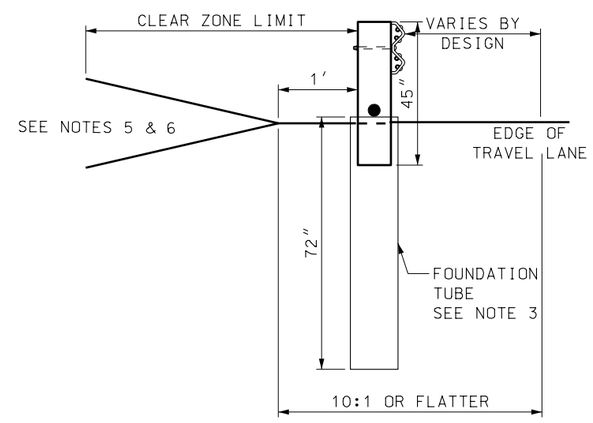

TYPICAL SECTION A-A
POSTS 1-2

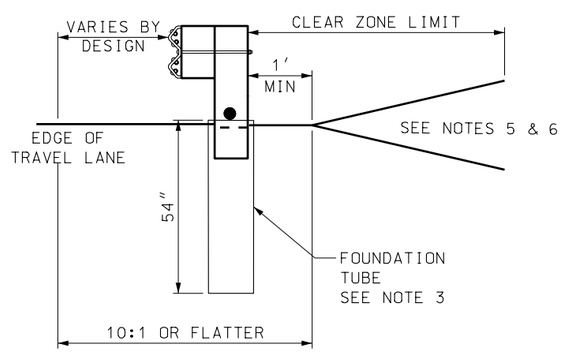

TYPICAL SECTION B-B
POSTS 3-4

TABLE 1	
SPEED MPH	TAPER
LESS THAN 40	7:1
40 TO 55	10:1
60 TO 75	15:1

NOTES:

1. APPROVED SYSTEMS: ET-2000 AND ET-PLUS MANUFACTURED BY TRINITY INDUSTRIES AND THE SKT-350, MANUFACTURED BY ROAD SYSTEMS INC. REFER TO UDOT'S GUIDELINES FOR CRASH CUSHIONS FOR SPECIFIC SYSTEM DETAILS.

2. SYSTEM OFFSET:
   A. INSTALL SYSTEM WITH 1 FOOT OFFSET (50:1 FLARE RATE) WHEN USED WITH A TANGENT BARRIER SYSTEM.
   B. INSTALL SYSTEM AT THE SAME FLARE RATE AS THE BARRIER INSTALLATION SYSTEM IS BEING ATTACHED TO.

3. POST OPTIONS: REFER TO UDOT'S GUIDELINES FOR CRASH CUSHION FOR APPROVED POST OPTIONS.

4. RAIL ELEMENTS
   A. USE 12½ FOOT RAIL ELEMENTS AS SPECIFIED BY THE SYSTEM MANUFACTURER.
   B. DO NOT BOLT RAIL ELEMENT TO POST 1.
   C. REFER TO MANUFACTURE SPECIFICATIONS FOR OTHER RAIL TO POST BOLT REQUIREMENTS.

5. COMPLETE SLOPE PREPARATIONS PRIOR TO INSTALLING SYSTEM.
   A. USE 10:1 OR FLATTER SLOPES IN APPROACH AREAS.
   B. CONSTRUCT RECOVER AREA SLOPE AS PER CC8A WHEN CONDITIONS PERMIT. CONSULT ENGINEER FOR ALLOWABLE SLOPES WHEN SLOPE REQUIREMENTS OF CC 8A CANNOT BE MET.

6. CLEAR RECOVERY AND APPROACH AREAS OF ANY FIXED OBJECTS.
   A. DO NOT PLACE SIGNS OR POLES IN APPROACH AREA.
   B. USE BREAKAWAY SIGNS OR POLES WHEN PLACED IN RECOVERY AREA, AND MAINTAIN A MINIMUM 10 FOOT CLEARANCE TO THE SIDES AND REAR OF THE SYSTEM.

7. CONSTRUCT PLATFORM AS REQUIRED EVEN IF THE PLATFORM EXTENDS BEYOND THE CLEAR ZONE REQUIREMENT.

8. USE GUARDRAIL TRANSITION, STD DWG BA 4 SERIES, WHEN ATTACHING SYSTEM TO CONCRETE BARRIER OR BRIDGE PARAPET.

9. INSTALL REQUIRED MARKINGS AS PER STD DWG CC 1.

10. USE THE CURRENT EDITION, ROADSIDE DESIGN GUIDE TO ESTABLISH CLEAR ZONE REQUIREMENT AND LENGTH OF NEED (LON) REQUIREMENTS.

REVISIONS

NO.	DATE	APPR.	REMARKS
1	02/24/05	GS	NEW DRAWING.
2	04/28/05	GS	REISSUED TO CORRECT OVERSIGHT.

UTAH DEPARTMENT OF TRANSPORTATION
STANDARD DRAWINGS FOR ROAD AND BRIDGE CONSTRUCTION
SALT LAKE CITY, UTAH

RECOMMENDED FOR APPROVAL — APR.28,2005 DATE
CHAIRMAN STANDARDS COMMITTEE APPROVED — APR.28,2005 DATE
DEPUTY DIRECTOR

GRADING AND INSTALLATION DETAILS FOR "3R" PROJECTS CRASH CUSHION TYPE G

STANDARD DRAWING TITLE

STD DWG
CC 8B

DGN Files L:\Standard Drawings\Imperial\2005Approved\xChange2Approved\CC08B.dgn
18-MAY-2005

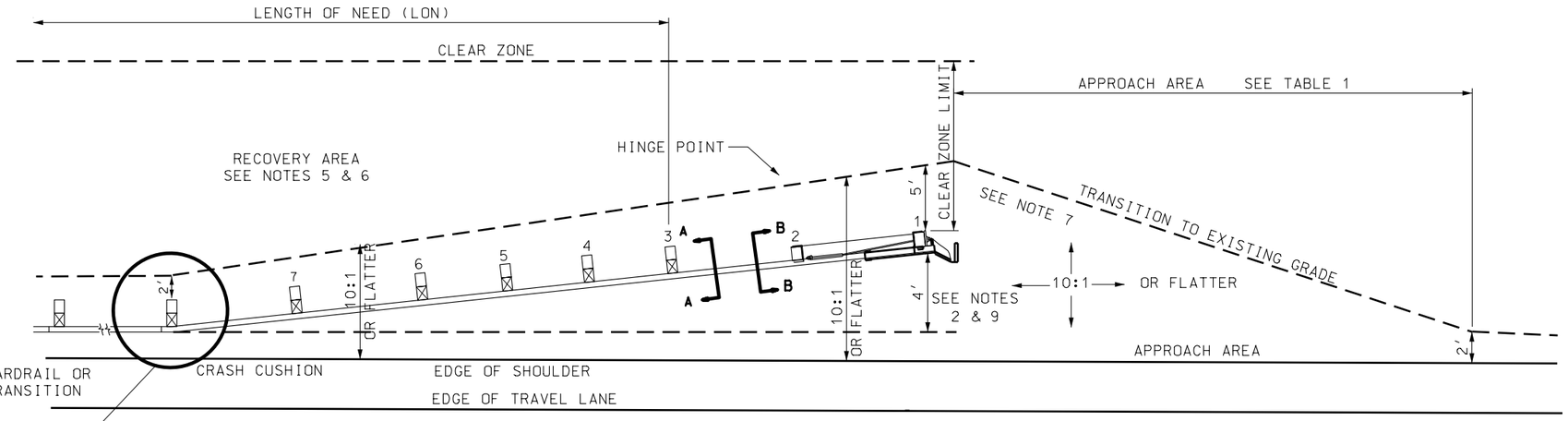

FLEAT - 350 / SRT/HBA

WOOD POST
OPTION SHOWN
SEE NOTES 3 & 8

SEE NOTES 3 & 8

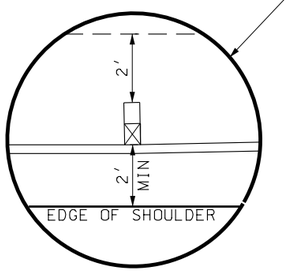

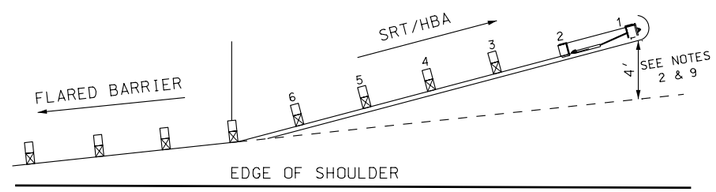

SRT/HBA WITH FLARED BARRIER

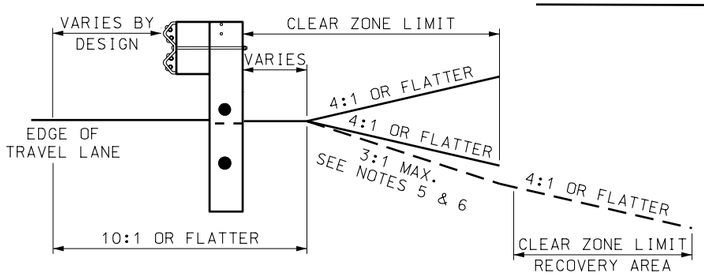

TYPICAL SECTION A-A

POST 3-8

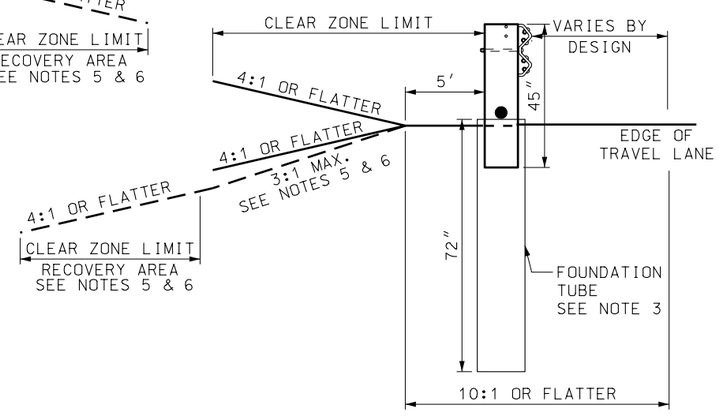

TYPICAL SECTION B-B

POST 1-2

TABLE 1	
SPEED MPH	TAPER
LESS THAN 40	7:1
40 TO 55	10:1
60 TO 75	15:1

NOTES:

1. APPROVED SYSTEMS: FLEAT 350, MANUFACTURED BY ROAD SYSTEMS, INC. AND SRT/HBA MANUFACTURED BY TRINITY INDUSTRIES REFER TO UDOT'S GUIDELINES FOR CRASH CUSHIONS FOR SPECIFIC SYSTEM DETAILS.

2. SYSTEM OFFSET:
   A. INSTALL SYSTEM WITH A 4 FOOT OFFSET WHEN USED WITH A TANGENT BARRIER SYSTEM.
   B. FLEAT-350: INSTALL AT THE SAME FLARE RATE AS THE BARRIER INSTALLATION.
   C. SRT/HBA: INSTALL SYSTEM WITH A 4 FOOT OFFSET, FROM THE FLARED BARRIER EXTENDED.

3. POST OPTIONS: REFER TO UDOT'S GUIDELINES FOR CRASH CUSHIONS FOR APPROVED POST OPTIONS.
   A. SRT/HBA: THE LAST POST OF THE GUARDRAIL INSTALLATION OR THE GUARDRAIL TRANSITION ELEMENT (POST #11) WILL BE SUBSTITUTED WITH A CRT POST AS PER MANUFACTURER'S REQUIREMENTS.

4. USE 12½ FOOT RAIL SECTIONS (3 EACH SECTIONS), SLOTTED AS PER MANUFACTURER:S REQUIREMENTS.

5. COMPLETE SLOPE PREPARATION PRIOR TO INSTALLING SYSTEM.
   A. USE 10:1 OR FLATTER SLOPES IN APPROACH AREA.
   B. USE 4:1 OR FLATTER FORESLOPE OR BACKSLOPE IN THE RECOVERY AREA.
      1) IF A 4:1 FORESLOPE. IN RECOVERY AREA IS IMPRACTICAL USE A MAXIMUM 3:1 FORESLOPE. ESTABLISH A RECOVERY AREA AT THE TOE OF THE 3:1 FORESLOPE OF 4:1 OR FLATTER.
   C. USE A 4:1 BACKSLOPE TO THE CLEAR ZONE LIMIT IN THE RECOVERY AREA IF A 4:1 CANNOT BE ESTABLISHED A 3:1 IS PERMITTED.

6. CLEAR RECOVERY AND APPROACH AREAS OF ANY FIXED OBJECTS.
   A. DO NOT PLACE SIGNS OR POLES IN APPROACH AREA.
   B. USE BREAKAWAY SIGNS OR POLES WHEN PLACED IN RECOVERY AREA, AND MAINTAIN A MINIMUM 10 FOOT CLEARANCE TO THE SIDES AND REAR OF SYSTEM.

7. CONSTRUCT PLATFORM AS REQUIRED EVEN IF THE PLATFORM EXTENDS BEYOND THE CLEAR ZONE REQUIREMENTS.

8. USE GUARDRAIL TRANSITION, STD DWG BA 4 SERIES, WHEN ATTACHING THE SYSTEM TO CONCRETE BARRIER OR BRIDGE PARAPET.
   A. SRT/HBA: REPLACE THE LAST POST OF THE TRANSITION WITH A CRT POST. SEE NOTE 3.

9. INSTALL REQUIRED MARKINGS AS PER STD DWG CC 1.

10. USE THE CURRENT ROADSIDE DESIGN GUIDE TO ESTABLISH CLEAR ZONE REQUIREMENT AND LENGTH OF NEED (LON) REQUIREMENTS.

REVISIONS

NO.	DATE	APPR.	REMARKS
1	02/24/05	GS	MODIFIED RECOVERY AREA REQUIREMENTS, REVISED NOTES AND TABLE 1, ADDED SRT/HBA FLARED BARRIER DETAIL.
2	04/28/05	GS	REISSUED TO CORRECT OVERSIGHT.

UTAH DEPARTMENT OF TRANSPORTATION
STANDARD DRAWINGS FOR ROAD AND BRIDGE CONSTRUCTION

RECOMMENDED FOR APPROVAL — APR.28,2005 DATE
CHAIRMAN STANDARDS COMMITTEE APPROVED — APR.28,2005 DATE
DEPUTY DIRECTOR

GRADING AND INSTALLATION DETAILS CRASH CUSHION TYPE H

STANDARD DRAWING TITLE

STD DWG
CC 9A

DGN File:L:\Standard Drawings\Imperial\2005Approved\Change2Approved\CC09a.dgn
10-MAY-2005

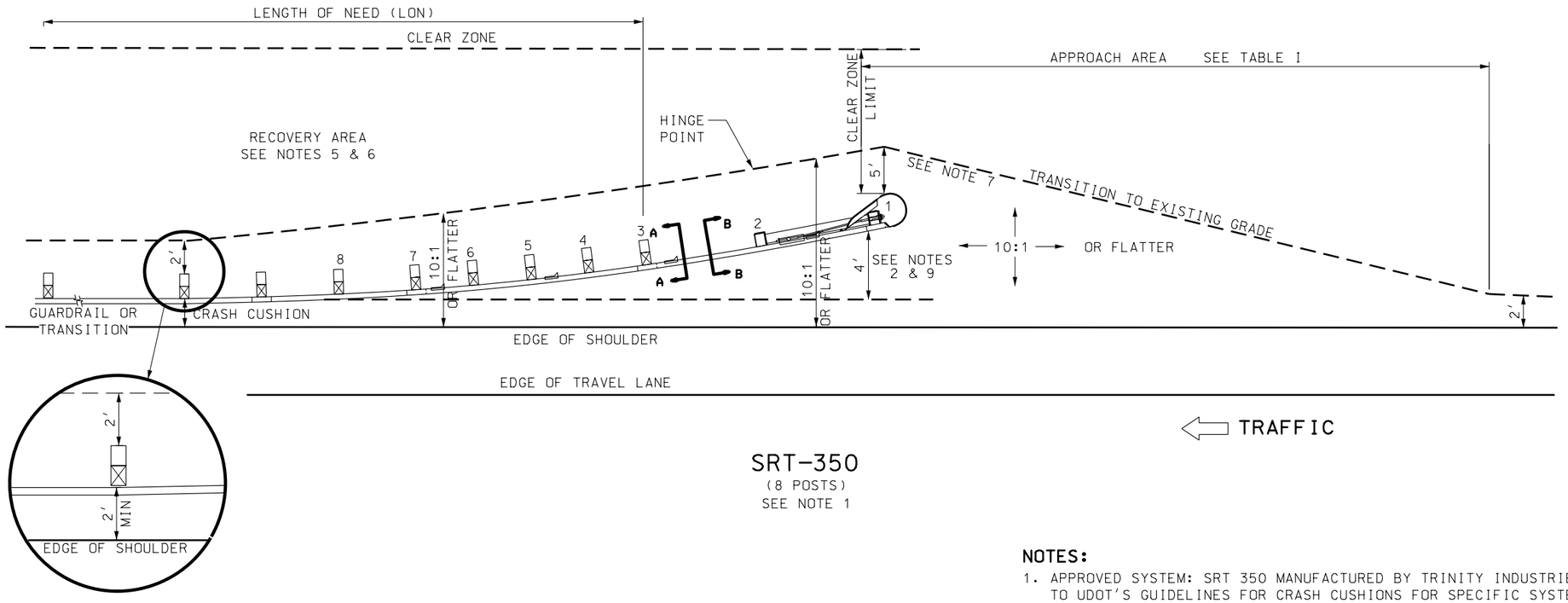

SRT-350
(8 POSTS)
SEE NOTE 1

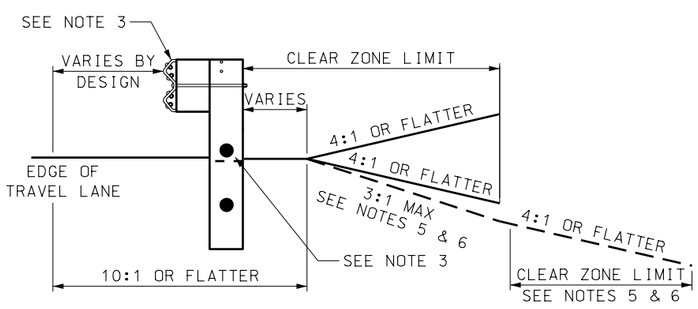

TYPICAL SECTION A-A
POSTS 3-8

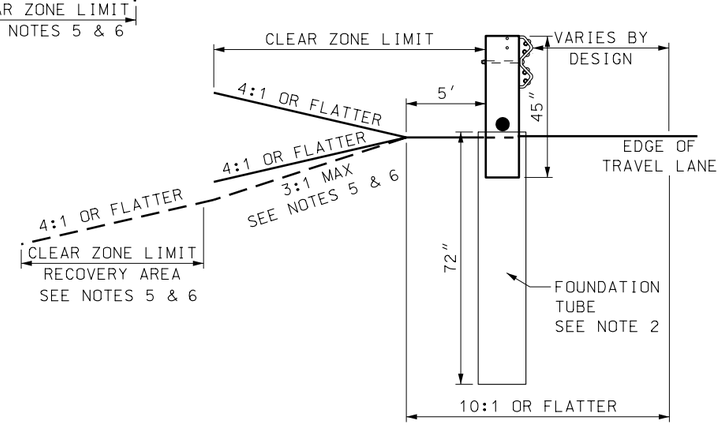

TYPICAL SECTION B-B
POSTS 1-2

TABLE 1	
SPEED MPH	TAPER
LESS THAN 40	7:1
40 TO 55	10:1
60 TO 75	15:1

NOTES:

1. APPROVED SYSTEM: SRT 350 MANUFACTURED BY TRINITY INDUSTRIES REFER TO UDOT'S GUIDELINES FOR CRASH CUSHIONS FOR SPECIFIC SYSTEM DETAILS.

2. SYSTEM OFFSET:
   A. THE SRT-350 INCORPORATES A PARABOLIC FLARE. INSTALL SYSTEM WITH A 4 FOOT OFFSET FROM THE BARRIER LINE EXTENDED ON BOTH A TANGENT AND FLARED INSTALLATION.

3. POST OPTIONS:
   A. WOOD POST ONLY
      1) POSTS 1 AND 2, 45 INCH BREAKAWAY POSTS SET INSIDE 6 FOOT FOUNDATION TUBES. TUBES NO GREATER THAN 4 INCHES ABOVE GROUND.
      2) POSTS 3 THROUGH 8 STANDARD CRT POST. THE BOTTOM OF THE TOP HOLE OF THE CRT POLE IS PLACED AT GROUND LEVEL.

4. USE 12½ FOOT RAIL SECTIONS (3 EACH SECTIONS), SLOTTED AS PER MANUFACTURER;S REQUIREMENTS.

5. COMPLETE SLOPE PREPARATION PRIOR TO INSTALLING SYSTEM.
   A. USE 10:1 OR FLATTER SLOPES IN APPROACH AREA.
   B. USE 4:1 OR FLATTER FORESLOPE OR BACKSLOPE IN THE RECOVERY AREA.
      1) IF A 4:1 FORESLOPE. IN RECOVERY AREA IS IMPRACTICAL USE A MAXIMUM 3:1 FORESLOPE. ESTABLISH A RECOVERY AREA AT THE TOE OF THE 3:1 FORESLOPE OF 4:1 OR FLATTER.
   C. USE A 4:1 BACKSLOPE TO THE CLEAR ZONE LIMIT IN THE RECOVERY AREA. IF A 4:1 CANNOT BE ESTABLISHED A 3:1 IS PERMITTED.

6. CLEAR RECOVERY AND APPROACH AREAS OF ANY FIXED OBJECTS.
   A. DO NOT PLACE SIGNS OR POLES IN APPROACH AREA.
   B. USE BREAKAWAY SIGNS OR POLES WHEN PLACED IN RECOVERY AREA. MAINTAIN A MINIMUM 10 FOOT CLEARANCE TO THE SIDES AND REAR OF SYSTEM.

7. CONSTRUCT PLATFORM AS REQUIRED EVEN IF THE PLATFORM EXTENDS BEYOND THE CLEAR ZONE REQUIREMENTS.

8. USE GUARDRAIL TRANSITION, STD DWG BA 4 SERIES, WHEN ATTACHING THE SYSTEM TO CONCRETE BARRIER OR BRIDGE PARAPET.

9. INSTALL REQUIRED MARKINGS AS PER STD DWG CC 1.

10. USE THE CURRENT ROADSIDE DESIGN GUIDE TO ESTABLISH CLEAR ZONE REQUIREMENT AND LENGTH OF NEED (LON) REQUIREMENTS.

REVISIONS

NO.	DATE	APPR.	REMARKS
1	02/24/05	GS	MODIFIED RECOVERY AREA REQUIREMENTS, REVISED NOTES AND TABLE 1.
2	04/28/05	GS	REISSUED TO CORRECT OVERSIGHT.

UTAH DEPARTMENT OF TRANSPORTATION
STANDARD DRAWINGS FOR ROAD AND BRIDGE CONSTRUCTION
SALT LAKE CITY, UTAH

RECOMMENDED FOR APPROVAL — APR.28,2005 DATE
CHAIRMAN STANDARDS COMMITTEE APPROVED — APR.28,2005 DATE
DEPUTY DIRECTOR

GRADING AND INSTALLATION DETAILS CRASH CUSHION TYPE H (PARABOLIC FLARE)
STANDARD DRAWING TITLE

STD DWG
CC 9B

DGN File:L:\Standard Drawings\Imperial\2005Approved\Change2Approved\CC09b.dgn
18-MAY-2005

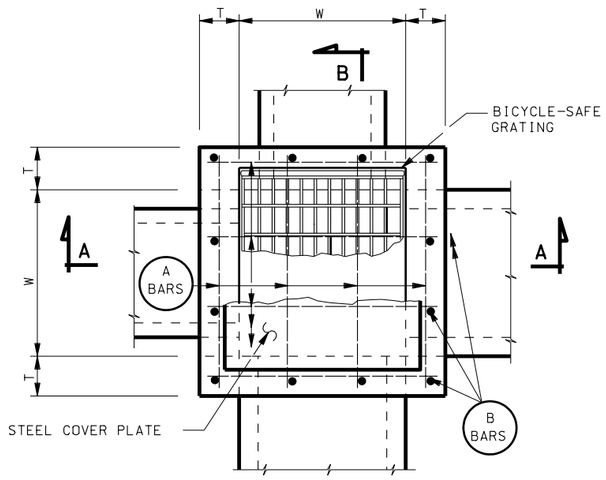

PLAN

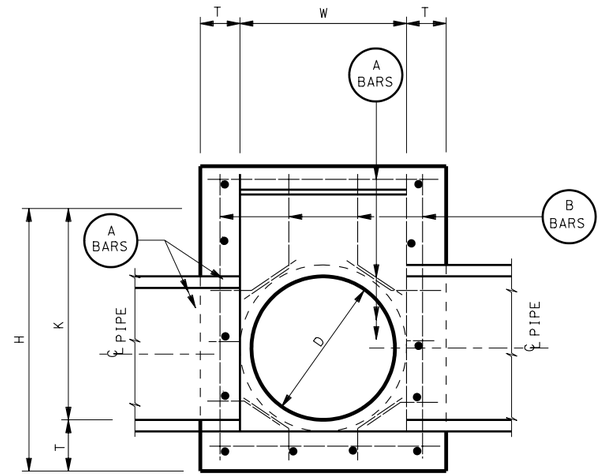

SECTION A-A

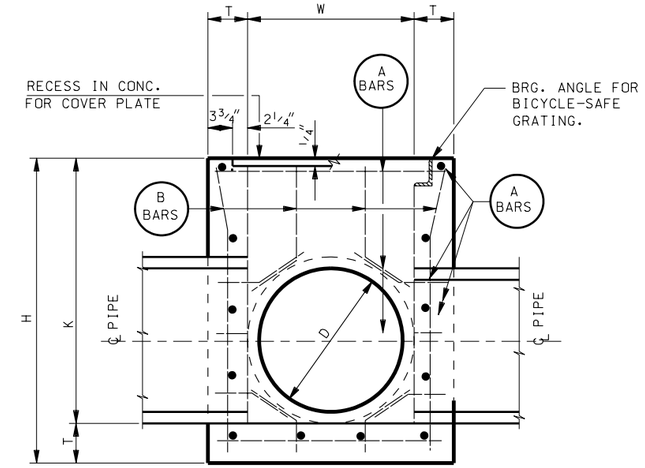

SECTION B-B

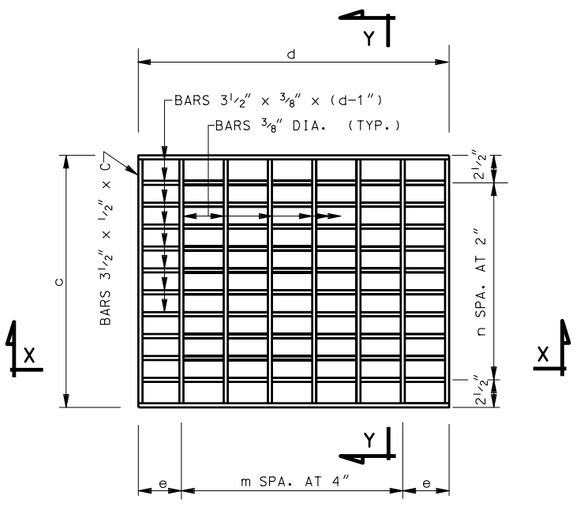

PLAN (GRATING)

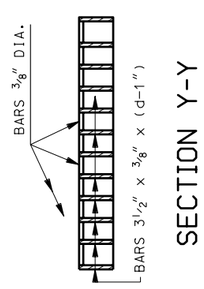

SECTION Y-Y

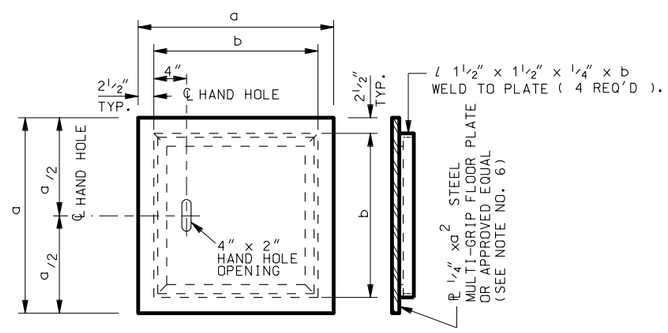

STEEL COVER PLATE DETAILS

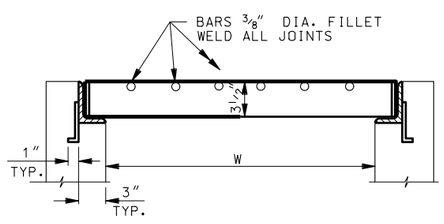

SECTION X-X

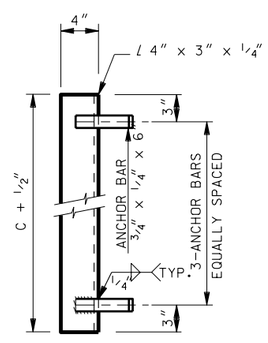

BICYCLE-SAFE GRATING

GENERAL NOTES FOR DB 1A TO DB 3C

1. USE COATED DEFORMED BILLET STEEL BARS CONFORMING TO AASHTO M 284 OR M 111 AND M 31 GRADE 60, RESPECTIVELY.
2. USE STRUCTURAL STEEL CONFORMING TO AASHTO M 270 GRADE 36 EXCEPT WHERE NOTED OTHERWISE.
3. HOT-DIP GALVANIZE THE GRATING AND FRAME AFTER FABRICATION IN ACCORDANCE WITH AASHTO M 111.
4. TYPE II CEMENT (LOW ALKALI), STRUCTURAL CONCRETE REQUIRED.
5. PIPES AND BOX TO BE ARRANGED TO SUIT CONDITIONS. CUT AND BEND BARS WHERE NECESSARY TO CLEAR PIPE. ALL BARS TO BE #5 AT 12" PLUS OR MINUS.
6. COVER PLATE ALTERNATE FOR GRATING. COVER PLATE IS NOT DESIGNED FOR WHEEL LOAD. (SEE STD DWG CB 4 FOR SOLID COVER FOR HS 20-44 LOADING).
7. DEDUCT CONCRETE DISPLACED BY PIPE(S) FROM THOSE CONCRETE QUANTITIES GIVEN IN SCHEDULE NO. 1.

DESIGN DATA

HS 20-44 OR INTERSTATE ALTERNATE LOADING IN ACCORDANCE WITH CURRENT AASHTO AND INTERIM SPECIFICATIONS.

LIVE LOAD: HS 20-44
fc = 1,400 psi
fs = 24,000 psi (REINFORCING STEEL)
fs = 20,000 psi (STRUCTURAL STEEL)
n = 8

DIMENSIONS & QUANTITIES

(SEE SCHEDULES ON STD DWG DB 1D)

NO.	DATE	APPR.	REMARKS

REVISIONS

UTAH DEPARTMENT OF TRANSPORTATION
STANDARD DRAWINGS FOR ROAD AND BRIDGE CONSTRUCTION
SALT LAKE CITY, UTAH

RECOMMENDED FOR APPROVAL — JAN.01,2005 DATE
CHAIRMAN STANDARDS COMMITTEE APPROVED — JAN.01,2005 DATE
DEPUTY DIRECTOR

STANDARD DIVERSION BOX/COVER PLATE/ GRATING FOR 18" DIA. OR 24" DIA.PIPE

STANDARD DRAWING TITLE

STD DWG
DB 1A

DGN File: N:\Esa\Standard_Drawings\Imperial\2005Approved\Diversion Boxes (DB)\db01a.dgn
15-DEC-2004

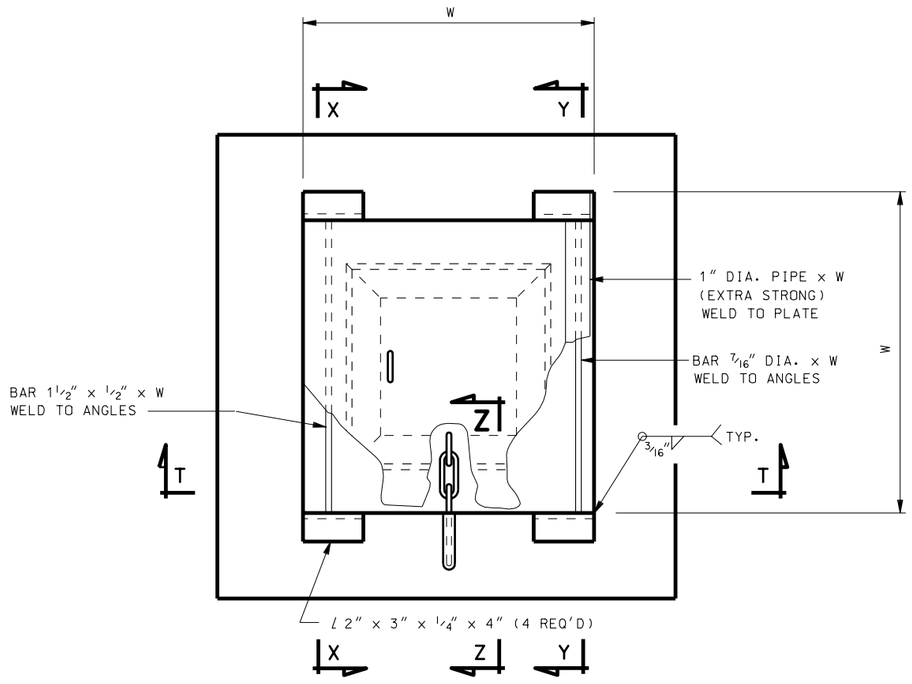

PLAN

DETAILS OF SHEET COVER PLATE
(SECTION Z-Z IS ON STD DWG DB 1C)

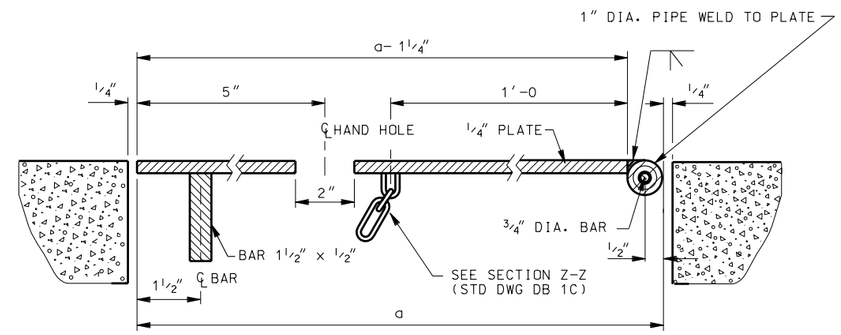

SECTION T-T

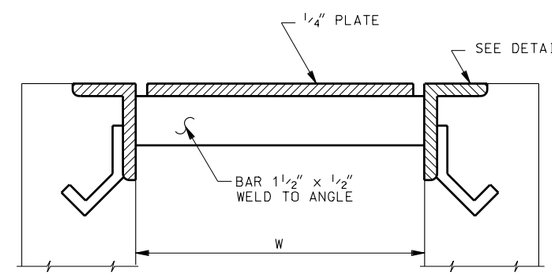

SECTION X-X

SECTION Y-Y

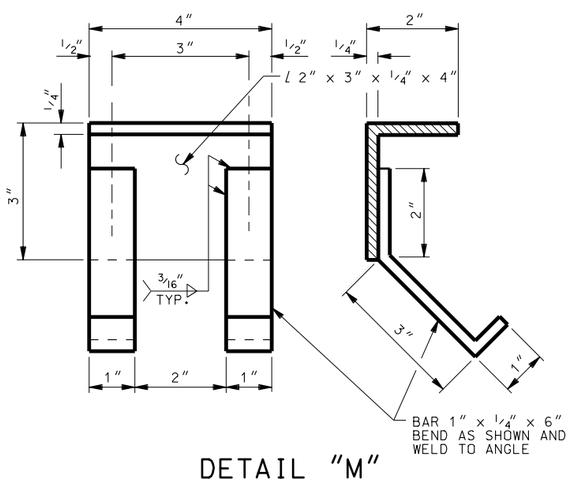

DETAIL "M"
HINGED LID DETAILS

DIMENSION & QUANTITIES
(SEE SCHEDULE ON STD DWG DB 1D)

NO.	DATE	APPR.	REMARKS

REVISIONS

UTAH DEPARTMENT OF TRANSPORTATION
STANDARD DRAWINGS FOR ROAD AND BRIDGE CONSTRUCTION
SALT LAKE CITY, UTAH

RECOMMENDED FOR APPROVAL — JAN.01,2005 DATE
CHAIRMAN STANDARDS COMMITTEE APPROVED — JAN.01,2005 DATE
DEPUTY DIRECTOR

STANDARD DIVERSION
BOX HINGED LID
DETAILS FOR
18" DIA. OR 24" DIA.PIPE

STANDARD DRAWING TITLE

STD DWG
DB 1B

DGN File:N:\Esa\Standard_Drawings\Imperial\2005Approved\Diversion Boxes (DB)\db01bu.dgn

15-DEC-2004

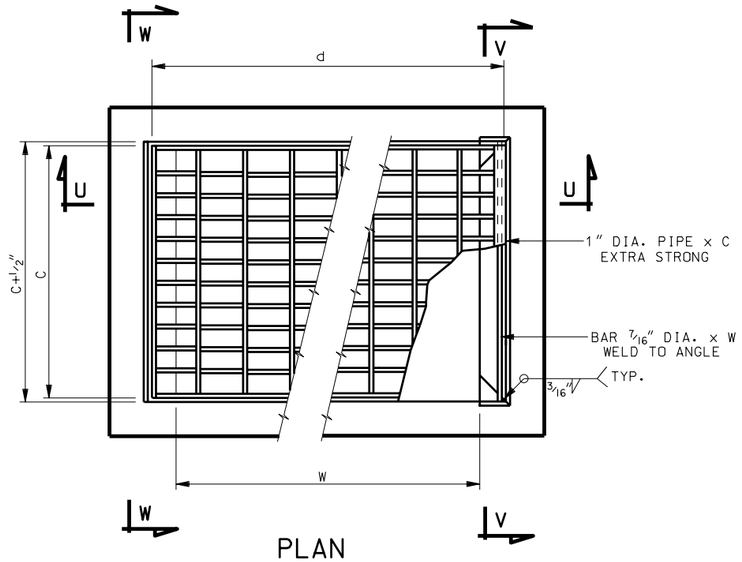

PLAN

DETAIL OF BICYCLE-SAFE GRATING

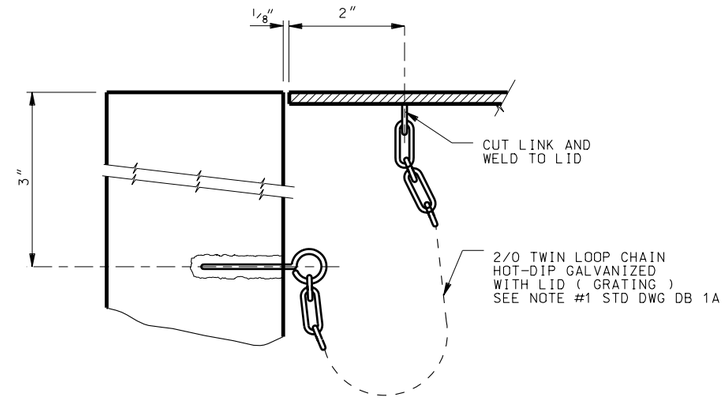

SECTION Z-Z

NOTE #1 STD DWG DB 1A
LENGTH OF CHAIN:
FOR LID: L = 1'-9
FOR GRATING: L = 2'-6

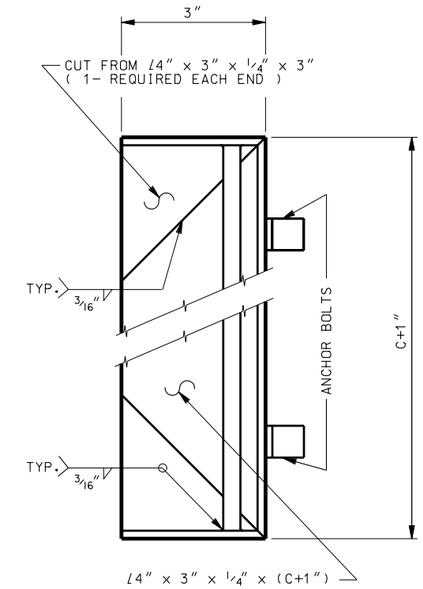

SECTION S-S

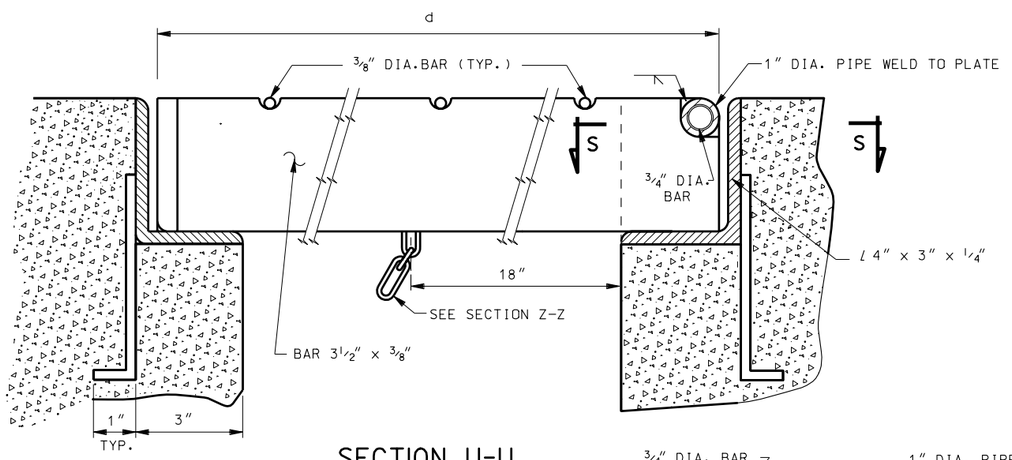

SECTION U-U

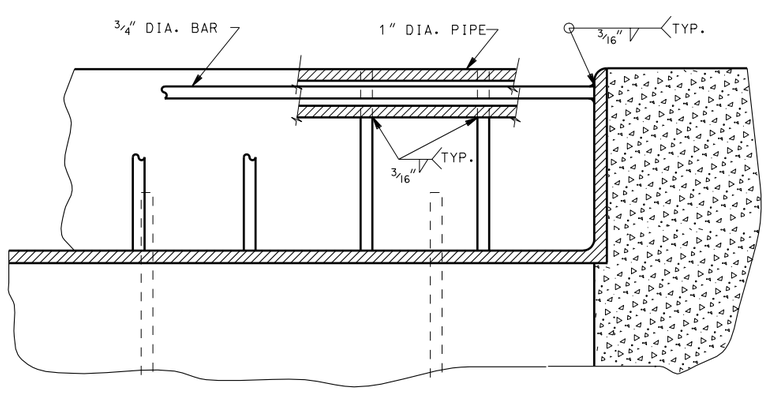

SECTION V-V

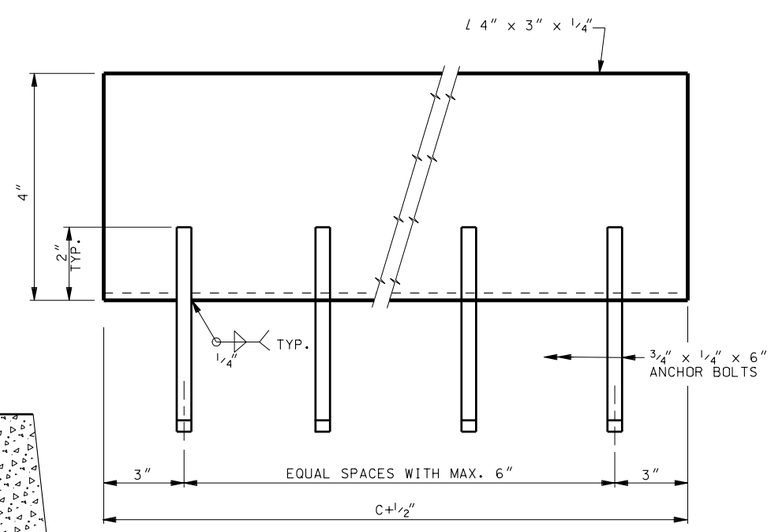

SECTION W-W

DIMENSIONS & QUANTITIES
(SEE SCHEDULES ON STD DWG DB 1D)

NO.	DATE	APPR.	REMARKS

REVISIONS

UTAH DEPARTMENT OF TRANSPORTATION
STANDARD DRAWINGS FOR ROAD AND BRIDGE CONSTRUCTION
SALT LAKE CITY, UTAH

RECOMMENDED FOR APPROVAL — JAN.01,2005 DATE
CHAIRMAN STANDARDS COMMITTEE APPROVED — JAN.01,2005 DATE
DEPUTY DIRECTOR

STANDARD DIVERSION BOX BICYCLE-SAFE GRATING DETAILS FOR 18" DIA OR 24" DIA.PIPE

STANDARD DRAWING TITLE

STD DWG
DB 1C

DGN File:N:\Eng\Standard.Drawings\Imperial\2005Approved\Diversion Boxes (DB)\db01c.dgn
15-DEC-2004

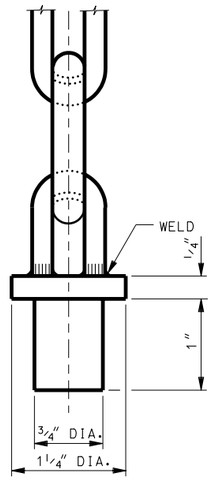

SET BOLT DETAIL

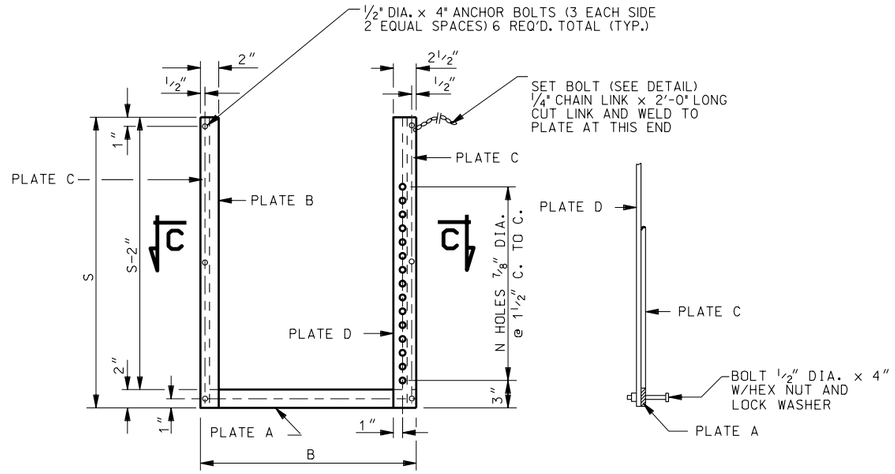

FRAME DETAILS

SCHEDULE NO. 1

LINE	DIMENSIONS H	K	W	T	X	REINFORCING STEEL A-BARS LENGTH	A-BARS NO.	B-BARS LENGTH	B-BARS NO.	QUANTITIES REINF. STEEL LB.	CONC. CU. YD.	STRUCTURAL STEEL GRATING LBS.	COVER PLATE LBS.	FRAME LBS.	GATE LBS.
1	2'-6	2'-0	2'-0	6"	0	2'-8	12	2'-1	12	59	.525	177	80	18	26
2	3'-0	2'-6	↑	↑	6"	↑	16	2'-7	↑	77	.617	↑	↑	↑	↑
3	3'-6	3'-0			1'-0		16	3'-1		83	.710				
4	4'-0	3'-6			1'-6		20	3'-7		100	.802				
5	4'-6	4'-0			2'-0		20	4'-1		107	.895				
6	5'-0	4'-6			2'-6		24	4'-7		124	.988				
7	5'-6	5'-0			3'-0		24	5'-1		130	1.080				
8	6'-0	5'-6			3'-6		28	5'-7		148	1.173				
9	6'-6	6'-0	↓	↓	4'-0	↓	28	6'-1	↓	154	1.265	↓	↓	↓	↓
10	7'-0	6'-6	2'-0	6"	4'-6	2'-8	32	6'-7	12	171	1.358	177	80	18	26
11	3'-0	2'-6	2'-6	6"	0	3'-2	16	2'-7	12	85	.770	254	114	21	41
12	3'-6	3'-0	↑	↑	6"	↑	16	3'-1	↑	91	.878	↑	↑	↑	↑
13	4'-0	3'-6			1'-0		20	3'-7		111	.989				
14	4'-6	4'-0			1'-6		20	4'-1		117	1.100				
15	5'-0	4'-6			2'-0		24	4'-7		137	1.211				
16	5'-6	5'-0			2'-6		24	5'-1		143	1.323				
17	6'-0	5'-6			3'-0		28	5'-7		162	1.434				
18	6'-6	6'-0			3'-6		28	6'-1		169	1.545				
19	7'-0	6'-6	↓	↓	4'-0	↓	32	6'-7	↓	188	1.656	↓	↓	↓	↓
20	7'-6	7'-0	2'-6	6"	4'-6	3'-2	32	7'-1	12	194	1.767	254	114	21	41

SCHEDULE NO. 2

PIPE SIZE D	COVER PLATE a	b	BICYCLE-SAFE GRATING c	d	e	m	n	FRAME AND GATE B	S	N	1-PL. A	1-PL. B	2-PL. C	1-PL. D	GATE
18"	2'-4	1'-11	1'-11	2'-4 1/2	4 1/4"	5	9	1'-11	2'-0	12	1/4"x2"x1'-11	1/4"x2"x2'-0	1/4"x1"x1'-10	1/4"x2 1/2"x2'-0	3/16"x20 1/2"x1'-10
24"	2'-10	2'-5	2'-5	2'-10 1/2	5 1/4"	6	12	2'-5	2'-6	15	1/4"x2"x2'-5	1/4"x2"x2'-6	1/4"x1"x2'-4	1/4"x2 1/2"x2'-6	3/16"x26 1/2"x2'-4

SEE NOTE 4

SEE NOTE 5

D	a
18"	1'-11 1/2
24"	2'-5 1/2

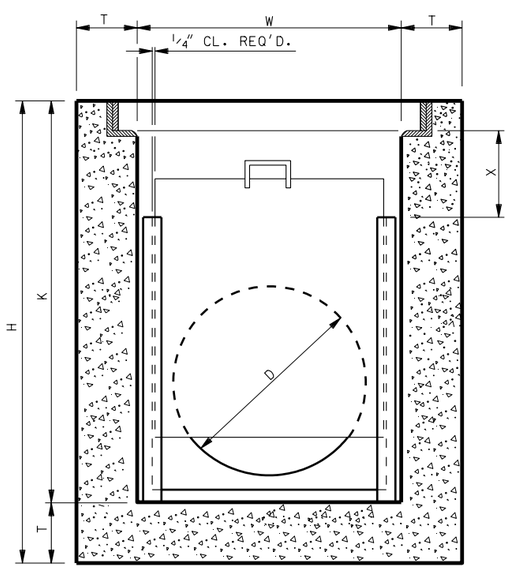

FRAME AND GATE INSTALLATION DETAIL

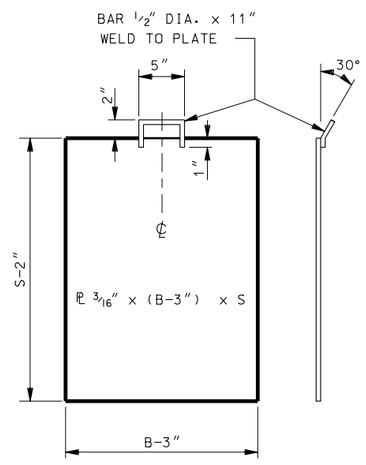

GATE

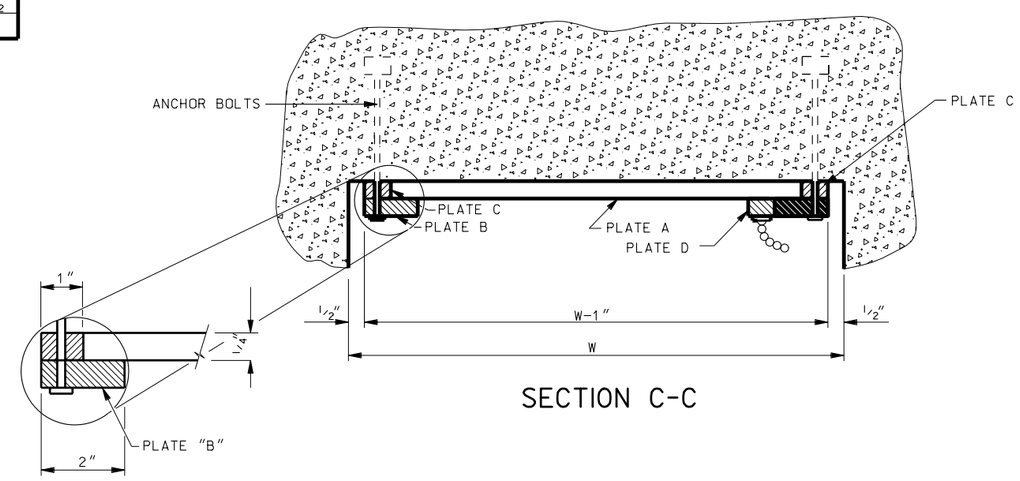

SECTION C-C

NOTES:

1. CALCULATIONS OF CONCRETE QUANTITIES ARE FOR BOXES WITH BICYCLE-SAFE GRATING AND NO OPENINGS FOR PIPE(S).
2. FOR SOLID COVER ADD .011 CU. YD. OF CONCRETE IN LINES 1 THRU 10 INCLUSIVE AND .014 CU. YD. OF CONCRETE IN LINES 11 THRU 20 INCLUSIVE AND DEDUCT .053 CU. YD. OF CONCRETE FOR EACH 18" DIA. PIPE IN LINES 1 THRU 10 INCLUSIVE AND .091 CU. YD. OF CONCRETE FOR EACH 24" DIA. PIPE IN LINES 11 THRU 20 INCLUSIVE.
3. IF DIMENSION X IS LESS THAN INSIDE PIPE DIAMETER D, THE GATE(S) CAN ONLY BE PARTIALLY OPENED TO ALLOW THE GRATING OR COVER PLATE TO BE REPLACED.
4. SEE STD DWG CB 4 FOR SOLID COVER PLATE DETAILS.
5. SEE STD DWG DB 1B FOR HINGED LID DETAILS.

NO.	DATE	APPR.	REMARKS

REVISIONS

UTAH DEPARTMENT OF TRANSPORTATION
STANDARD DRAWINGS FOR ROAD AND BRIDGE CONSTRUCTION
SALT LAKE CITY, UTAH

RECOMMENDED FOR APPROVAL — JAN.01,2005 DATE
CHAIRMAN STANDARDS COMMITTEE APPROVED — JAN.01,2005 DATE
DEPUTY DIRECTOR

STANDARD DIVERSION BOX THREE GATE BOX SECTIONS FOR 18" DIA. OR 24" DIA. PIPE

STANDARD DRAWING TITLE

STD DWG
DB 1D

DGN File:N:\Eng\Standard_Drawings\Imperial\2005Approved\Diversion Boxes (DB)\db01d.dgn

15-DEC-2004

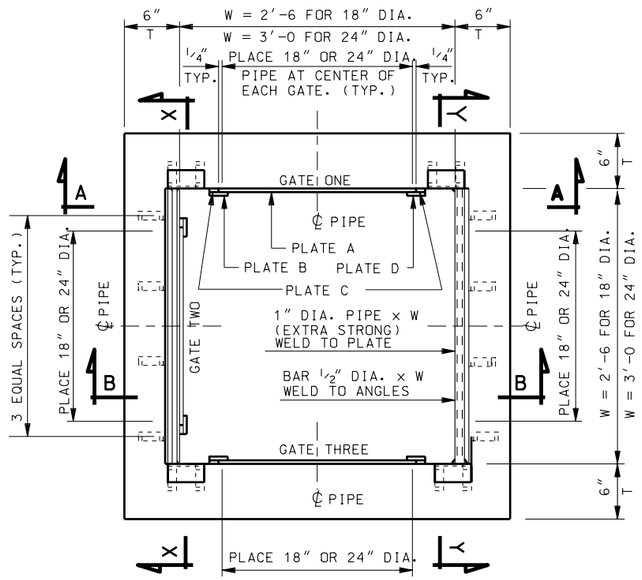

3 GATE PLAN

(SECTION X-X Y-Y & B-B ARE ON STD DWG DB 1F)

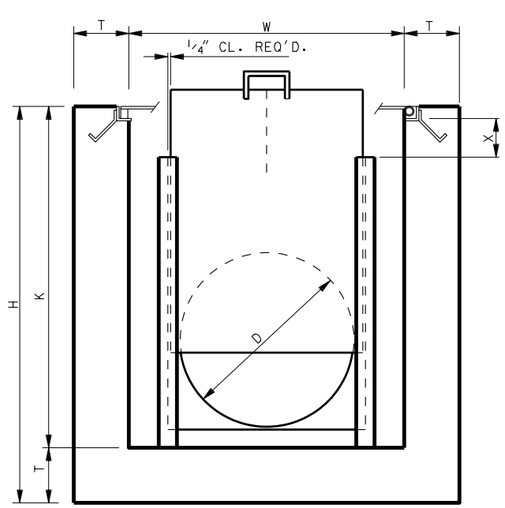

SECTION A-A

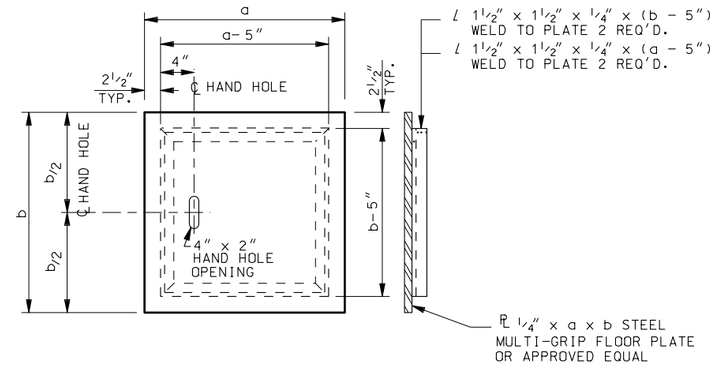

STEEL COVER PLATE DETAILS

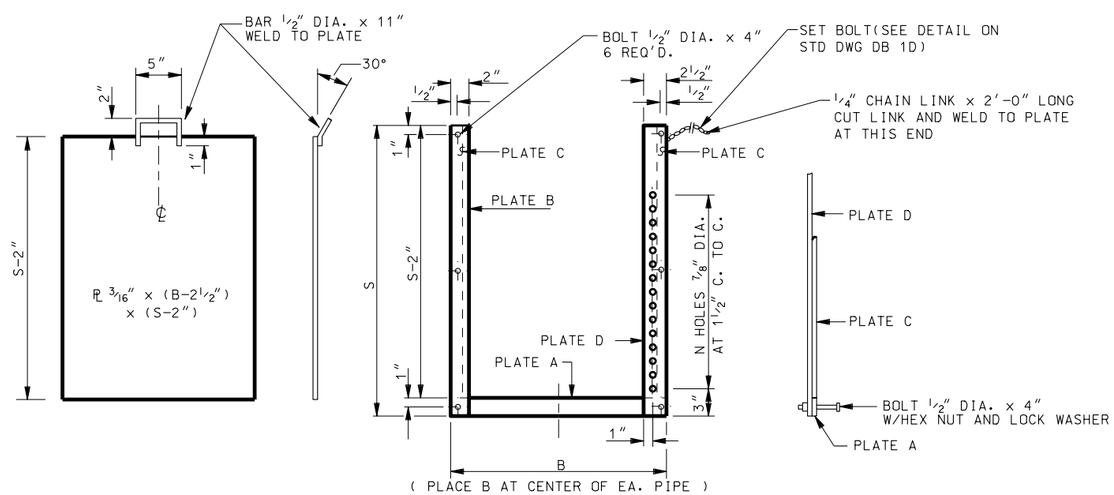

FRAME AND GATE INSTALLATION DETAIL DIMENSIONS AND QUANTITIES

SEE SCHEDULES ON STD DWG DB 1F

NO.	DATE	APPR.	REMARKS

REVISIONS

UTAH DEPARTMENT OF TRANSPORTATION
STANDARD DRAWINGS FOR ROAD AND BRIDGE CONSTRUCTION
SALT LAKE CITY, UTAH

RECOMMENDED FOR APPROVAL — JAN.01,2005 DATE
CHAIRMAN STANDARDS COMMITTEE APPROVED — JAN.01,2005 DATE
DEPUTY DIRECTOR

STANDARD DIVERSION BOX THREE GATE BOX SECTIONS FOR 18" DIA. OR 24" DIA.PIPE

STANDARD DRAWING TITLE

STD DWG
DB 1E

DGN File:N:\Esd\Standard Drawings\Imperial\2005Approved\Diversion Boxes (DB)\db01e.dgn

15-DEC-2004

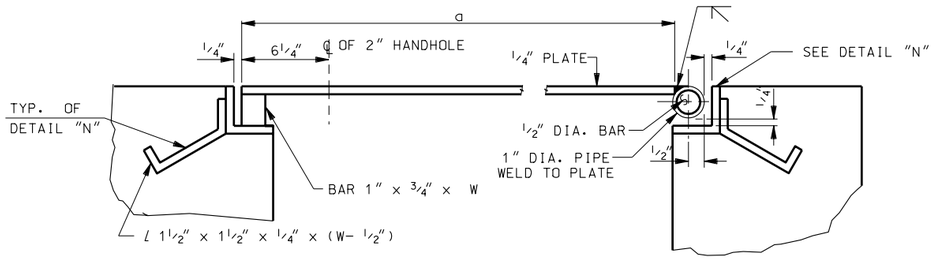

SECTION B-B

(SECTION IS TAKEN FROM STD DWG DB 1E)

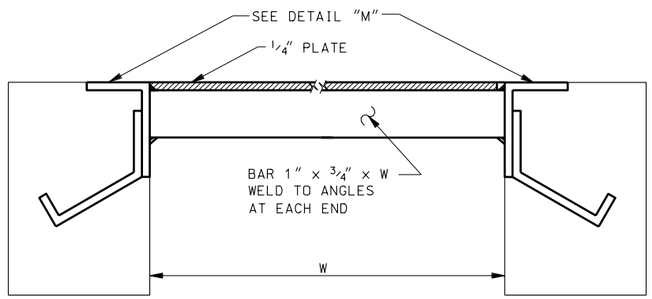

SECTION X-X

(SECTION IS TAKEN FROM STD DWG DB 1E)

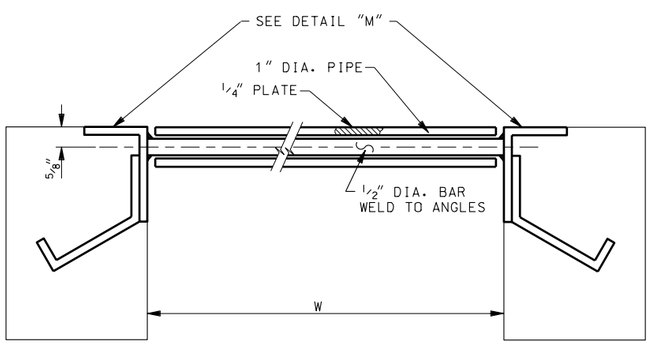

SECTION Y-Y

(SECTION IS TAKEN FROM STD DWG DB 1E)

SCHEDULE NO.1

LINE	DIMENSIONS H	K	W	T	X	REINFORCING STEEL A-BARS LENGTH	A-BARS NO.	B-BARS LENGTH	B-BARS NO.	QUANTITIES REINF. STEEL LB.	CONC. CU. YD.	STRUCTURAL STEEL PIPES, BARS & ANGLES lbs.	COVER PLATE lbs.	FRAME* lbs.	GATE lbs. EA.
1	2'-6	2'-0	2'-6	6"	0	3'-2	12	2'-1	12	66	0.672	31	85	14	25
2	3'-0	2'-6	↑	↑	6"	↑	16	2'-7	↑	85	0.783	↑	↑	↑	↑
3	3'-6	3'-0			1'-0		16	3'-1		91	0.894				
4	4'-0	3'-6			1'-6		20	3'-7		111	1.005				
5	4'-6	4'-0			2'-0		20	4'-1		117	1.116				
6	5'-0	4'-6			2'-6		24	4'-7		137	1.227				
7	5'-6	5'-0			3'-0		24	5'-1		143	1.338				
8	6'-0	5'-6			3'-6		28	5'-7		163	1.450				
9	6'-6	6'-0	↓	↓	4'-0	↓	28	6'-1	↓	169	1.561	↓	↓	↓	↓
10	7'-0	6'-6	2'-6	6"	4'-6	3'-2	32	6'-7	12	188	1.672	31	85	14	25
11	3'-0	2'-6	3'-0	6"	0	3'-8	16	2'-7	12	94	0.944	35	118	18	41
12	3'-6	3'-0	↑	↑	6"	↑	16	3'-1	↑	100	1.074	↑	↑	↑	↑
13	4'-0	3'-6			1'-0		20	3'-7		121	1.203				
14	4'-6	4'-0			1'-6		20	4'-1		128	1.333				
15	5'-0	4'-6			2'-0		24	4'-7		150	1.463				
16	5'-6	5'-0			2'-6		24	5'-1		156	1.592				
17	6'-0	5'-6			3'-0		28	5'-7		184	1.722				
18	6'-6	6'-0			3'-6		28	6'-1		183	1.852				
19	7'-0	6'-6	↓	↓	4'-0	↓	32	6'-7	↓	205	1.981	↓	↓	↓	↓
20	7'-6	7'-0	3'-0	6"	4'-6	3'-8	32	7'-1	12	211	2.111	35	118	18	41

* PLATES A TO D PER GATE

SCHEDULE NO.2

PIPE SIZE D	DIMENSIONS AND QUANTITIES: COVER PLATE a	b	FRAME AND GATE B	S	N	PLATE-A 1 EACH	PLATE-B 1 EACH	PLATE-C 2 EACH	GATE SIZE	PLATE-D 1 EACH
18"	2'-7	2'-5½	1'-11	2'-0	12	¼"x2"x1'-11	¼"x2"x2'-0	¼"x1"x1'-10	3/16"x20½"x1'-10	¼"x2½"x2'-0
24"	3'-1	2'-11½	2'-5	2'-6	15	¼"x2"x2'-5	¼"x2"x2'-6	¼"x1"x2'-4	3/16"x26½"x2'-4	¼"x2½"x2'-6

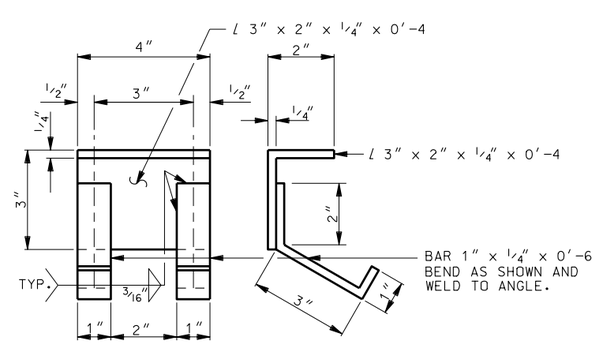

DETAIL "M"

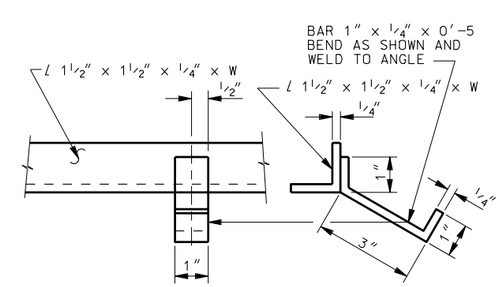

DETAIL "N"

REVISIONS

NO.	DATE	APPR.	REMARKS

UTAH DEPARTMENT OF TRANSPORTATION
STANDARD DRAWINGS FOR ROAD AND BRIDGE CONSTRUCTION
SALT LAKE CITY, UTAH

RECOMMENDED FOR APPROVAL — JAN.01.2005 DATE
CHAIRMAN STANDARDS COMMITTEE APPROVED — JAN.01.2005 DATE
DEPUTY DIRECTOR

STANDARD DIVERSION BOX THREE GATE BOX SECTIONS FOR 18"DIA. OR 24" DIA.PIPE

STANDARD DRAWING TITLE

STD DWG
DB 1F

DGN File: N:\Eng\Standard Drawings\Imperial\2005Approved\Diversion Boxes (DB)\db01f.dgn
15-DEC-2004

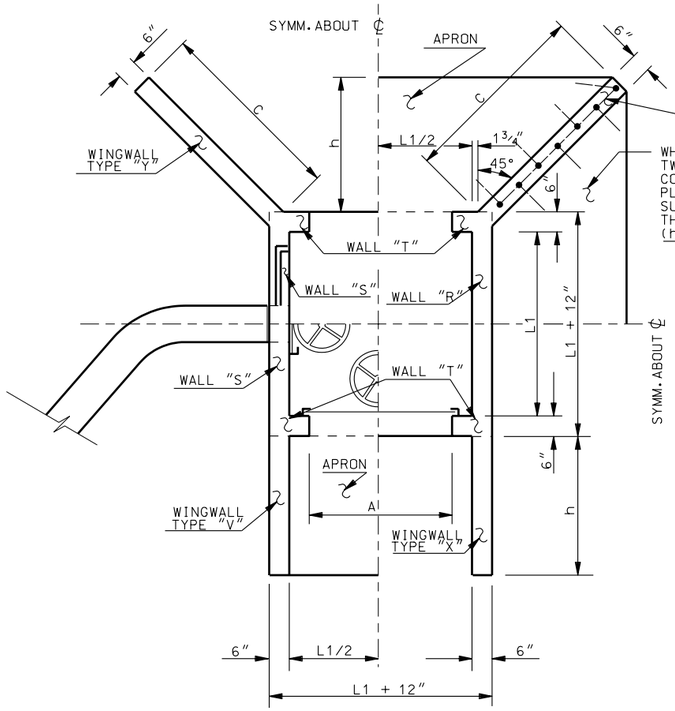

WHEN FLUMES INTERSECT AND REQUIRE TWO ADJACENT WINGWALLS WITH APRONS CONSTRUCT ONLY ONE WINGWALL AND PLACE REINFORCING STEEL AS SHOWN. SUBTRACT FROM QUANTITIES SHOWN IN THE SCHEDULE THE VOLUME OF ONE WALL:

$$\frac{(h+0.58)(0.5)(C)}{27.0}$$

DIVERSION BOX W/INTERCHANGEABLE WALLS
PLAN VIEW

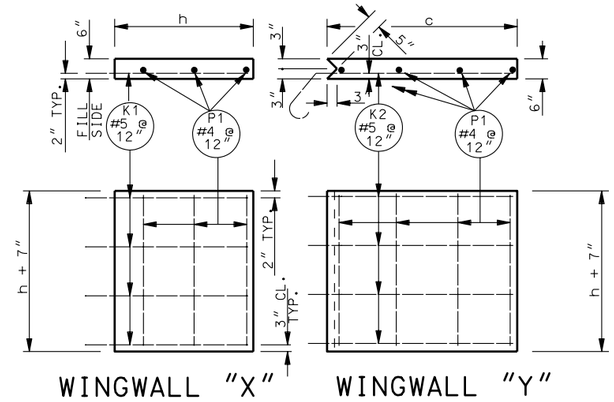

WINGWALL "X" WINGWALL "Y"

NOTES:

INTERPRETATION OF SCHEMATIC SKETCH ON ROADWAY PLAN AND PROFILE SHEET TO INCLUDE:

1. ORIENTATION OF DIVERSION BOX RELATIVE TO ROADWAY CONTROL LINE.
2. TYPE OF WALL SPECIFIED FOR EACH BOX WITH ACCOMPANYING GATE AND CUT-OFF WALL REQUIREMENTS.
3. HINGET LID REQUIREMENTS.
4. FOR GENERAL NOTES SEE STD DWG DB 2B

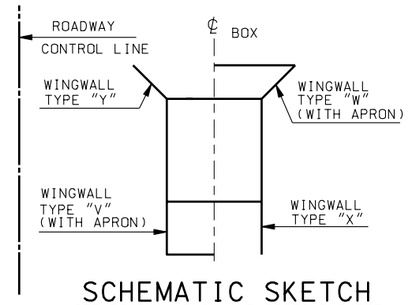

SCHEMATIC SKETCH
SEE ROADWAY PLAN AND PROFILE SHEET

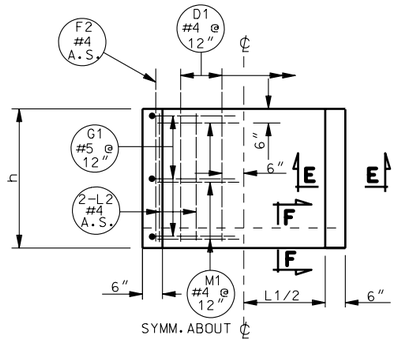

PLAN

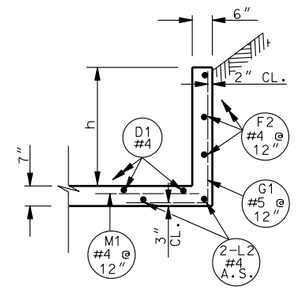

SECTION E-E

APRON & WINGWALLS TYPE "V"

PROVIDE CUT-OFF WALL ONLY WHEN CALLED FOR IN NOTE.
PROVIDE WHEN SO SPECIFIED, FOR ALL APRONS SHOWN IN NOTE.

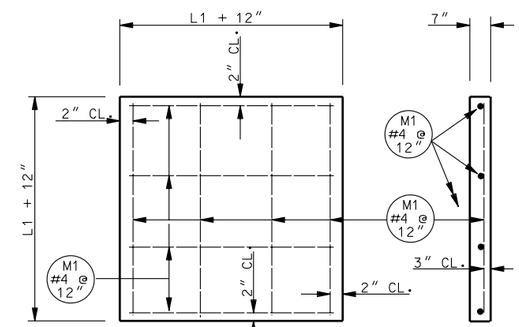

BOTTOM SLAB

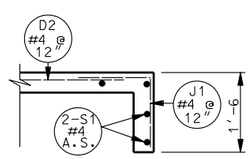

SECTION F-F

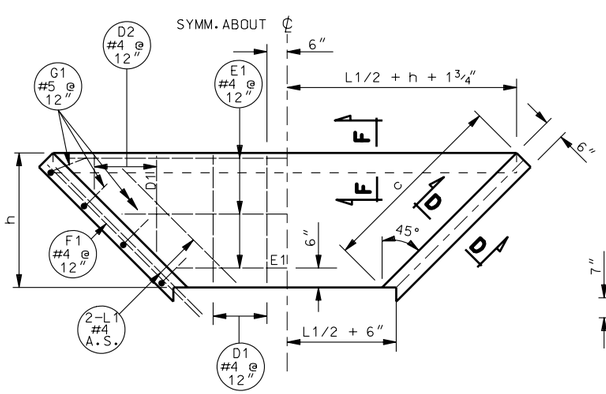

PLAN

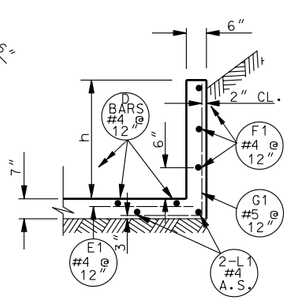

SECTION D-D

APRON & WINGWALLS TYPE "W"

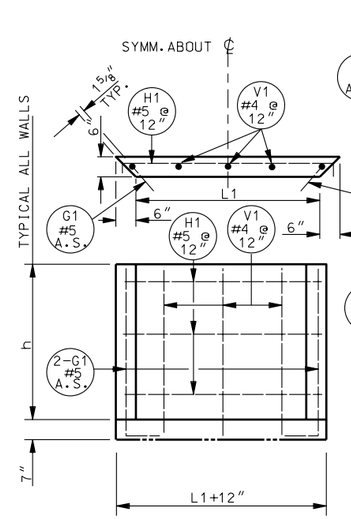

WALL "R"

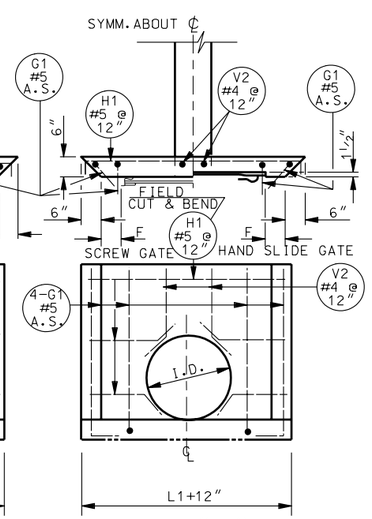

WALL "S"
(PIPE ARCH SIMILAR)

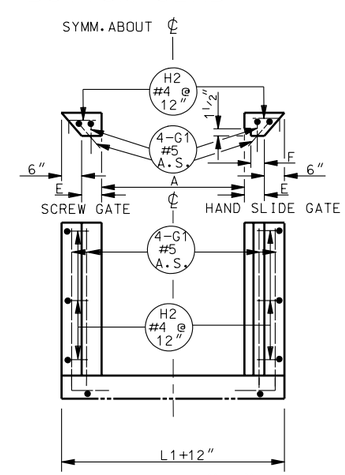

WALL "T"

BOTH "S" AND "T" WALLS HAVE THE OPTION OF HAND SLIDING GATE. WHEN SELECTING THIS OPTION THE CONCRETE LISTED IN THE TABLES ARE TO BE MODIFIED BY SUBTRACTING FROM THEM THE BLOCK-OUT AS DETERMINED BY THESE FORMULAS: "T" WALL – 0.25h(E–F)/27:
"S" WALL– h(L1–2F)(0.125)/2T

NO.	DATE	APPR.	REMARKS

REVISIONS

UTAH DEPARTMENT OF TRANSPORTATION
STANDARD DRAWINGS FOR ROAD AND BRIDGE CONSTRUCTION
SALT LAKE CITY, UTAH

RECOMMENDED FOR APPROVAL — JAN.01.2005 DATE
CHAIRMAN STANDARDS COMMITTEE
APPROVED — JAN.01.2005 DATE
DEPUTY DIRECTOR

STANDARD DIVERSION BOX W/INTERCHANGEABLE WALLS, BOTTOM SLAB, WALLS AND APRON DETAILS
STANDARD DRAWING TITLE

STD DWG
DB 2A

DGN File:N:\Esd\Standard_Drawings\Imperial\2005Approved\Diversion Boxes (DB)\db02a.dgn
15-DEC-2004

WINGWALLS WITH ATTACHED APRON

DIVERSION BOX SIZES ARE BASED ON BOTH THE SCREW GATE FRAME SIZES AND THE DIAMETERS OF ROUND PIPE. THEY MAY BE USED WITH EITHER FLUMES, ARCH PIPES OR ROUND PIPES.

γ = NO. OF SETS; CUT LINE; β = NO. OF BARS PER SET; AVE. L'GTH = (α + N)/2

PIPE	LINE NUMBER	DIMENSIONS IN INCHES	FLUME SIZE A x B: SCREW GATE	FLUME SIZE A x B: HAND SLIDE GATE	DIMENSIONS: C	E	F	h	L 1
I.D.	1	12		12x12	2'-6	6"	3"	1'-9	2'-0
I.D.	2	18	18x18	18x18	3'-2	6"	3"	2'-3	2'-6
I.D.	3	24	24x24	24x24	3'-10	6"	3"	2'-9	3'-0
I.D.	4	30	30x30		4'-7	8"	5"	3'-3	3'-10
I.D.	5	36	36x36		5'-4	8"	5"	3'-9	4'-4
I.D.	6	42	42x42		6'-0	8"	4"	4'-3	4'-10
I.D.	7	48	48x48		6'-9	9"	5"	4'-9	5'-6
S x R	8	36x22	36x24	36x24	3'-8	8"	5"	2'-7	4'-4
S x R	9	43x27	48x30		4'-3	8"	4"	3'-0	5'-4
S x R	10	50x31	60x36		4'-9	9"	5"	3'-4	6'-6
S x R	11	58x36	60x36		5'-4	9"	5"	3'-9	6'-6
S x R	12	65x40	72x42		5'-9	9"	5"	4'-1	7'-6
S x R	13	72x44	72x48		6'-3	9"	5"	4'-5	7'-6

TYPE W

LINE NUMBER	E1 α	E1 W	E1 γ	E1 β	E1 AVE. L'GTH	D2 α	D2 W	D2 γ	D2 β	D2 AVE. L'GTH
1	3'-3	5'-5	1	2	4'-4	1'-1	0	2	1	1'-1
2	3'-9	6'-11		3	5'-4	1'-7	7"		2	1'-1
3	4'-3	8'-5		3	6'-4	2'-1	1'-1		2	1'-7
4	5'-2	10'-4		4	7'-9	2'-7	7"		3	1'-7
5	5'-7	11'-9		4	8'-8	3'-1	1'-1		3	2'-1
6	6'-2	13'-4		5	9'-9	3'-7	7"		4	2'-1
7	6'-9	14'-11		5	10'10	4'-1	1'-1		4	2'-7
8	5'-7	9'-5		3	7'-6	1'-11	11"		2	1'-5
9	6'-7	11'-3		3	8'-11	2'-4	1'-4		2	1'-10
10	7'-9	13'-1		4	10'-5	2'-8	8"		3	1'-8
11	7'-9	13'-11		4	10'-10	3'-1	1'-1		3	2'-1
12	8'-9	15'-7		5	12'-2	3'-5	5"		4	1'-11
13	8'-9	16'-3	1	5	12'-6	3'-5	9"	2	4	2'-3

G1: θ, 1'-2; D1, F1, L1, S1; J1: 1'-1, 1'-1

LINE NUMBER	D1 L'GTH	D1 NO.	G1 θ	G1 L'GTH	G1 NO.	F1 L'GTH	F1 NO.	L1 L'GTH	L1 NO.	J1 L'GTH	J1 NO.	S1 L'GTH	S1 NO.	REINFORCING STEEL LB. WITHOUT CUT-OFF WALL	REINFORCING STEEL LB. WITH CUT-OFF WALL	CONCRETE CUBIC YARDS WITHOUT CUT-OFF WALL	CONCRETE CUBIC YARDS WITH CUT-OFF WALL
1	2'-7	2	1'-11	3'-1	6	2'-8	4	2'-0	4	2'-2	6	5'-5	2	42.5	58.4	0.362	0.462
2	3'-1	3	2'-5	3'-7	8	3'-4	6	2'-9			9	5'-11		70.4	92.7	0.577	0.690
3	3'-7	3	2'-11	4'-1	10	4'-0	6	3'-5			9	8'-5		91.9	116.2	0.832	0.979
4	4'-1	4	3'-5	4'-7	10	4'-9	8	4'-2			12	10'-4		122.3	153.5	1.169	1.347
5	4'-7	4	3'-11	5'-1	12	5'-6	8	4'-10			12	11'-9		149.7	182.8	1.536	1.739
6	5'-1	5	4'-5	5'-7	14	6'-2	10	5'-6			15	13'-4		198.1	255.4	1.934	2.166
7	5'-7	6	4'-11	6'-1	16	6'-11	10	6'-3			16	14'11		236.8	279.9	2.414	2.674
8	3'-5	4	2'-9	3'-11	10	3'-10	6	3'-2			10	9'-5		92.6	120.0	0.832	0.996
9	3'-10	5	3'-2	4'-4	10	4'-5	6	3'-9			11	11'-3		108.5	139.5	1.123	1.318
10	4'-2	7	3'-6	4'-8	12	4'-11	8	4'-3			15	13'-1		150.0	189.2	1.417	1.645
11	4'-7	7	3'-11	5'-1	12	5'-6	8	4'-10			15	13'-11		164.7	205.0	1.709	1.952
12	4'-11	8	4'-3	5'-5	14	5'-11	10	5'-4			18	15'-7		210.0	256.9	2.040	2.311
13	5'-3	8	4'-7	5'-9	14	6'-5	10	5'-9	4	2'-2	18	16'-3	2	224.0	271.8	2.321	2.603

TYPE V

G1: θ, 1'-2; L2, D1, M1, F2, S1; J1: 1'-1, 1'-1

LINE NUMBER	G1 θ	G1 L'GTH	G1 NO.	L2 L'GTH	L2 NO.	D1 L'GTH	D1 NO.	M1 L'GTH	M1 NO.	F2 L'GTH	F2 NO.	J1 L'GTH	J1 NO.	S1 L'GTH	S1 NO.	REINFORCING STEEL LB. WITHOUT CUT-OFF WALL	REINFORCING STEEL LB. WITH CUT-OFF WALL	CONCRETE CUBIC YARDS WITHOUT CUT-OFF WALL	CONCRETE CUBIC YARDS WITH CUT-OFF WALL
1	1'-11	3'-1	6	1'-5	4	2'-7	2	2'-8	3	2'-7	4	2'-2	4	2'-8	2	38.8	48.2	0.227	0.278
2	2'-5	3'-7	6	1'-11		3'-1	3	3'-2	3	3'-1	6		5	3'-2		52.4	63.9	0.358	0.417
3	2'-11	4'-1	8	2'-5		3'-7	3	3'-8	4	3'-7	6		5	3'-8		71.9	84.0	0.518	0.586
4	3'-5	4'-7	8	2'-11		4'-1	4	4'-6	4	4'-1	8		6	4'-6		90.8	105.5	0.731	0.813
5	3'-11	5'-1	10	3'-5		4'-7	4	5'-0	5	4'-7	8		6	5'-0		115.6	131.0	0.953	1.044
6	4'-5	5'-7	10	3'-11		5'-1	5	5'-6	5	5'-1	10		7	5'-6		138.0	155.5	1.205	1.304
7	4'-11	6'-1	12	4'-5		5'-7	6	6'-2	6	5'-7	12		8	6'-2		179.8	199.6	1.503	1.613
8	2'-9	3'-11	6	2'-3		3'-5	4	5'-0	3	3'-5	6		6	5'-0		63.4	78.7	0.545	0.636
9	3'-2	4'-4	8	2'-8		3'-10	5	6'-0	4	3'-10	8		7	6'-0		92.6	110.8	0.744	0.854
10	3'-5	4'-8	8	3'-0		4'-2	7	7'-2	4	4'-2	8		9	7'-2		107.9	130.5	0.952	1.079
11	3'-11	5'-1	10	3'-5		4'-7	7	7'-2	5	4'-7	8		9	7'-2		132.0	154.6	1.128	1.255
12	4'-3	5'-5	10	3'-9		4'-11	8	8'-2	5	4'-11	10		10	8'-2		152.9	178.3	1.367	1.511
13	4'-7	5'-9	10	4'-1	4	5'-3	8	8'-2	5	5'-3	10	2'-2	10	8'-2	2	161.3	186.7	1.534	1.678

WINGWALLS WITHOUT ATTACHED APRON / WALL TYPES / BOTTOM SLAB

DIVERSION BOX SIZES ARE BASED ON BOTH THE SCREW GATE FRAME SIZES AND THE DIAMETERS OF ROUND PIPE. THEY MAY BE USED WITH EITHER FLUMES, ARCH PIPES OR ROUND PIPES.

PIPE	LINE NUMBER	DIMENSIONS IN INCHES	FLUME SIZE A x B: SCREW GATE	FLUME SIZE A x B: HAND SLIDE GATE	DIMENSIONS: C	E	F	h	L 1
I.D.	1	12		12x12	2'-6	6"	3"	1'-9	2'-0
I.D.	2	18	18x18	18x18	3'-2	6"	3"	2'-3	2'-6
I.D.	3	24	24x24	24x24	3'-10	6"	3"	2'-9	3'-0
I.D.	4	30	30x30		4'-7	8"	5"	3'-3	3'-10
I.D.	5	36	36x36		5'-4	8"	5"	3'-9	4'-4
I.D.	6	42	42x42		6'-0	8"	4"	4'-3	4'-10
I.D.	7	48	48x48		6'-9	9"	5"	4'-9	5'-6
S x R	8	36x22	36x24	36x24	3'-8	8"	5"	2'-7	4'-4
S x R	9	43x27	48x30		4'-3	8"	4"	3'-0	5'-4
S x R	10	50x31	60x36		4'-9	9"	5"	3'-4	6'-6
S x R	11	58x36	60x36		5'-4	9"	5"	3'-9	6'-6
S x R	12	65x40	72x42		5'-9	9"	5"	4'-1	7'-6
S x R	13	72x44	72x48		6'-3	9"	5"	4'-5	7'-6

WINGWALL X / WINGWALL Y

WINGWALL X: K1, P1. WINGWALL Y: P1; K2: 6", T, 135°

LINE NUMBER	X: K1 L'GTH	X: K1 NO.	X: P1 L'GTH	X: P1 NO.	X: REINFORCING STEEL LB.	X: CONCRETE CUBIC YARDS	Y: K2 T	Y: K2 L'GTH	Y: K2 NO.	Y: P1 L'GTH	Y: P1 NO.	Y: REINFORCING STEEL LB.	Y: CONCRETE CUBIC YARDS
1	2'-7	3	1'-11	3	11.9	0.076	2'-9	3'-10	3	1'-11	3	15.8	0.103
2	3'-1	3	2'-5	3	14.5	0.118	3'-5	4'-6	3	2'-5	4	20.5	0.160
3	3'-7	4	2'-11	4	22.7	0.170	4'-1	5'-2	4	2'-11	4	29.3	0.229
4	4'-1	4	3'-5	4	26.2	0.231	4'-10	5'-11	4	3'-5	5	36.1	0.317
5	4'-7	5	3'-11	5	37.0	0.301	5'-7	6'-8	5	3'-11	6	50.5	0.418
6	5'-1	5	4'-5	5	41.3	0.380	6'-3	7'-4	5	4'-5	6	55.9	0.526
7	5'-7	6	4'-11	6	54.6	0.469	7'-0	8'-1	6	4'-11	7	73.6	0.654
8	3'-5	3	2'-9	3	16.2	0.152	3'-11	5'-0	3	2'-9	4	23.0	0.208
9	3'-10	4	3'-2	4	24.5	0.199	4'-6	5'-7	4	3'-2	5	33.9	0.274
10	4'-2	4	3'-6	4	26.7	0.242	5'-0	6'-1	4	3'-5	5	36.8	0.336
11	4'-7	5	3'-11	5	37.0	0.301	5'-7	6'-8	5	3'-11	6	50.5	0.418
12	4'-11	5	4'-3	5	39.8	0.353	6'-0	7'-1	5	4'-3	6	54.0	0.486
13	5'-3	5	4'-7	5	42.7	0.409	6'-6	7'-7	5	4'-7	7	60.5	0.567

WALL TYPES

WALL R: G1 (θ, 1'-2), V1, H1 (10", I). WALL S: G1 (θ, 1'-2), V2, H1 (10", I).

LINE NUMBER	R: G1 θ	R: G1 L'GTH	R: G1 NO.	R: H1 I	R: H1 L'GTH	R: H1 NO.	R: V1 L'GTH	R: V1 NO.	R: REINFORCING STEEL LB.	R: CONCRETE CUBIC YARDS	S: G1 θ	S: G1 L'GTH	S: G1 NO.	S: H1 I	S: H1 L'GTH	S: H1 NO.	S: V2 L'GTH	S: V2 NO.	S: REINFORCING STEEL LB.	S: CONCRETE CUBIC YARDS
1	1'-11	3'-1	2	2'-8	4'-4	2	1'-11	2	18.0	0.081	1'-11	3'-1	4	2'-8	4'-4	2	1'-5	1	22.8	0.067
2	2'-5	3'-7		3'-2	4'-10	3	2'-5	2	25.8	0.125	2'-5	3'-7		3'-2	4'-10	3	1'-8	1	31.2	0.092
3	2'-11	4'-1		3'-8	5'-4	3	2'-11	3	31.1	0.179	2'-11	4'-1		3'-8	5'-4	3	1'-11	1	35.0	0.120
4	3'-5	4'-7		4'-6	6'-2	4	3'-5	4	44.4	0.262	3'-5	4'-7		4'-6	6'-2	4	2'-2	2	47.7	0.170
5	3'-11	5'-1		5'-0	6'-8	4	3'-11	4	48.9	0.337	3'-11	5'-1		5'-0	6'-8	4	2'-5	3	53.9	0.205
6	4'-5	5'-7		5'-6	7'-2	5	4'-5	5	63.8	0.422	4'-5	5'-7		5'-6	7'-2	5	2'-8	3	66.0	0.242
7	4'-11	6'-1		6'-2	7'-10	5	4'-11	5	70.0	0.530	4'-11	6'-1		6'-2	7'-10	5	2'-11	4	74.0	0.296
8	2'-9	3'-11		5'-0	6'-8	3	2'-9	4	36.4	0.232	2'-9	3'-11		5'-0	6'-8	3	1'-10	3	40.9	0.150
9	3'-2	4'-4		6'-0	7'-8	3	3'-2	5	43.6	0.326	3'-2	4'-4		6'-10	7'-6	3	2'-1	5	48.5	0.206
10	3'-6	4'-8		7'-2	8'-10	4	3'-6	6	60.6	0.434	3'-6	4'-8		7'-2	8'-10	4	2'-4	5	64.1	0.271
11	3'-11	5'-1		7'-2	8'-10	4	3'-11	6	63.2	0.488	3'-11	5'-1		7'-2	8'-10	4	2'-5	5	66.1	0.275
12	4'-3	5'-5		8'-2	9'-10	4	4'-3	7	72.2	0.608	4'-3	5'-5		8'-2	9'-10	4	2'-7	6	74.0	0.340
13	4'-7	5'-9	2	8'-2	9'-10	5	4'-7	7	84.7	0.657	4'-7	5'-9	4	8'-2	9'-10	5	2'-9	6	86.3	0.328

WALL T: 10", H2, 1'-2, G1, θ. BOTTOM SLAB: M1

LINE NUMBER	T: G1 θ	T: G1 L'GTH	T: G1 NO.	T: H2 θ	T: H2 L'GTH	T: H2 NO.	T: REINFORCING STEEL LB.	T: CONCRETE CUBIC YARDS	BOTTOM SLAB: M1 L'GTH	BOTTOM SLAB: M1 NO.	BOTTOM SLAB: REINFORCING STEEL LB.	BOTTOM SLAB: CONCRETE CUBIC YARDS
1	1'-11	3'-1	4	10	1'-8	4	17.3	0.049	2'-8	8	14.3	0.194
2	2'-5	3'-7				6	21.6	0.063	3'-2	8	16.9	0.265
3	2'-11	4'-1				6	23.7	0.076	3'-8	10	24.5	0.346
4	3'-5	4'-7				8	28.0	0.110	4'-6	12	36.1	0.505
5	3'-11	5'-1				8	30.1	0.127	5'-0	12	40.1	0.614
6	4'-5	5'-7				10	34.4	0.144	5'-6	14	51.4	0.735
7	4'-11	6'-1				10	36.5	0.176	6'-2	14	57.7	0.913
8	2'-9	3'-11				6	23.0	0.088	5'-0	12	40.1	0.614
9	3'-2	4'-4				6	24.8	0.102	6'-0	16	64.1	0.867
10	3'-5	4'-8				8	28.4	0.124	7'-2	16	76.6	1.215
11	3'-11	5'-1				8	30.1	0.139	7'-2	16	76.6	1.215
12	4'-3	5'-5				8	31.5	0.151	8'-2	18	98.2	1.561
13	4'-7	5'-9	4	10	1'-8	10	35.1	0.164	8'-2	18	98.2	1.561

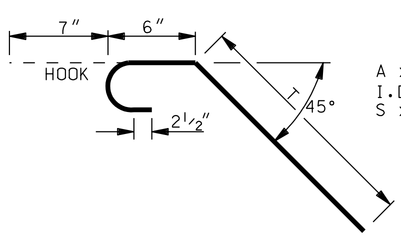

A x B - FLUME SIZE OR GATE SIZE
I.D. - INSIDE DIAMETER OF ROUND PIPE
S x R - SPAN x RISE OF ARCH PIPE

180° STANDARD HOOK DETAIL

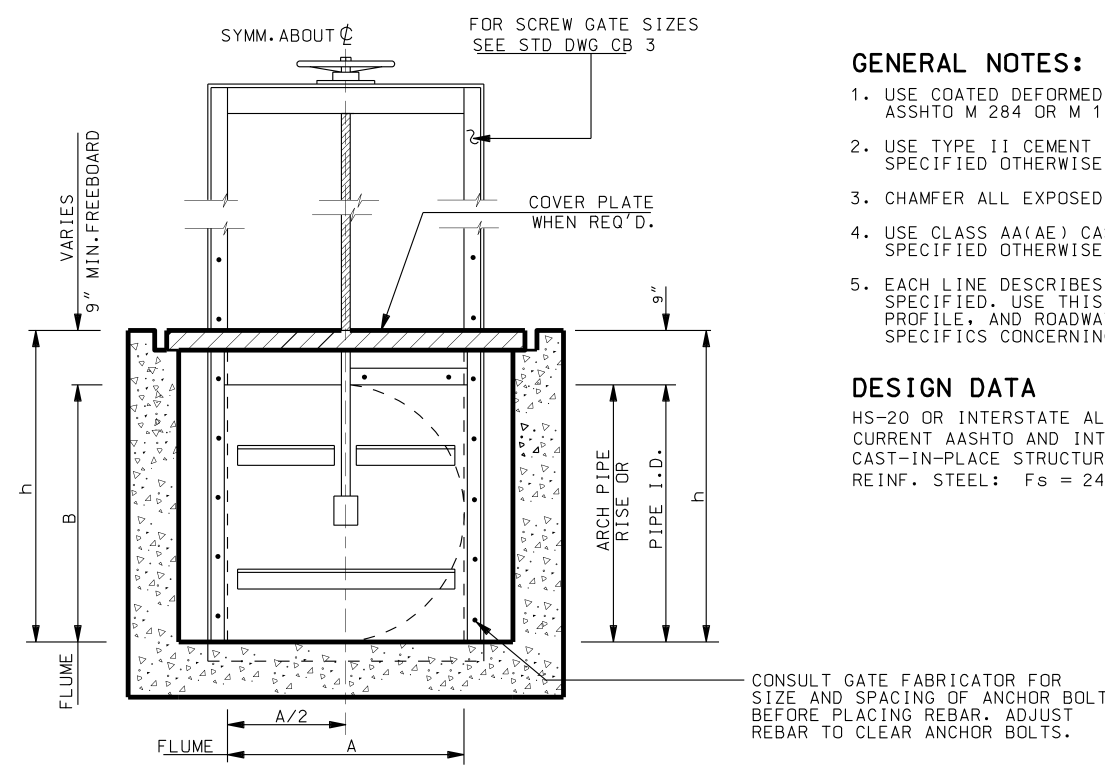

SCREW GATE INSTALLATION DIAGRAM

NOTES:

1. FOR TRANSITION STRUCTURE FROM DIVERSION BOX TO TRAPEZOIDAL SHAPED CHANNEL WITH BOTTOM WIDTH OF 1'-0". SEE STD DWG CB 3
2. ALL DIMENSIONS ARE ROUNDED TO THE NEAREST WHOLE INCH. THOSE DIMENSIONS SHOWN FOR REBAR ARE OUT-TO-OUT OF BAR.
3. WHEN LAYING-OUT SET REBAR, USE "α" AND "w" DIMENSIONS NOT AVERAGE LENGTH OF REBAR.
4. USE STANDARD 180 DEGREE HOOK FOR K2 BAR AS NOTED.
5. USE #5 REBARS FOR K1, K2, G1 AND H1 MARK NUMBERS. ALL REMAINING MARK NUMBERS ARE #4 REBARS.
6. SAME SIZE BOX IS REQUIRED FOR BOTH METAL PIPE AND CONCRETE PIPE.

GENERAL NOTES:

1. USE COATED DEFORMED BILLET REINFORCING STEEL BARS CONFORMING TO ASSHTO M 284 OR M 111 AND M 31 GRADE 60 RESPECTIVELY.
2. USE TYPE II CEMENT (LOW ALKALI) AND STRUCTURAL CONCRETE UNLESS SPECIFIED OTHERWISE.
3. CHAMFER ALL EXPOSED CONCRETE CORNERS ¾" EXCEPT WHERE NOTED OTHERWISE.
4. USE CLASS AA(AE) CAST-IN-PLACE CONCRETE EXCEPT WHERE NOTED OTHERWISE, SPECIFIED OTHERWISE.
5. EACH LINE DESCRIBES THE QUANTITIES FOR ONE WALL OR SLAB OF THE TYPE SPECIFIED. USE THIS DRAWING IN CONJUNCTION WITH ROADWAY PLAN AND PROFILE, AND ROADWAY SUMMARY SCHEDULES TO DETERMINE THE SPECIFICS CONCERNING EACH DIVERSION BOX.

DESIGN DATA

HS-20 OR INTERSTATE ALTERNATE LOADING IN ACCORDANCE WITH CURRENT AASHTO AND INTERIM SPECIFICATIONS.
CAST-IN-PLACE STRUCTURAL CONCRETE: Fc = 1,400 psi n = 8
REINF. STEEL: Fs = 24,000 psi

NO.	DATE	APPR.	REVISIONS	REMARKS

UTAH DEPARTMENT OF TRANSPORTATION
STANDARD DRAWINGS FOR ROAD AND BRIDGE CONSTRUCTION
SALT LAKE CITY, UTAH

RECOMMENDED FOR APPROVAL — JAN.01,2005 DATE
CHAIRMAN STANDARDS COMMITTEE APPROVED
DEPUTY DIRECTOR — JAN.01,2005 DATE

STANDARD DIVERSION BOX W/INTERCHANGEABLE WALLS, QUANTITIES SCHEDULE
STANDARD DRAWING TITLE

STD DWG
DB 2B

DGN File: N:\Esd\Standard_Drawings\Imperial\2005Approved\Diversion Boxes (DB)\db02b.dgn
15-DEC-2004

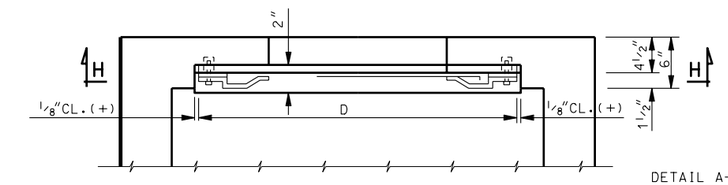

PARTIAL PLAN

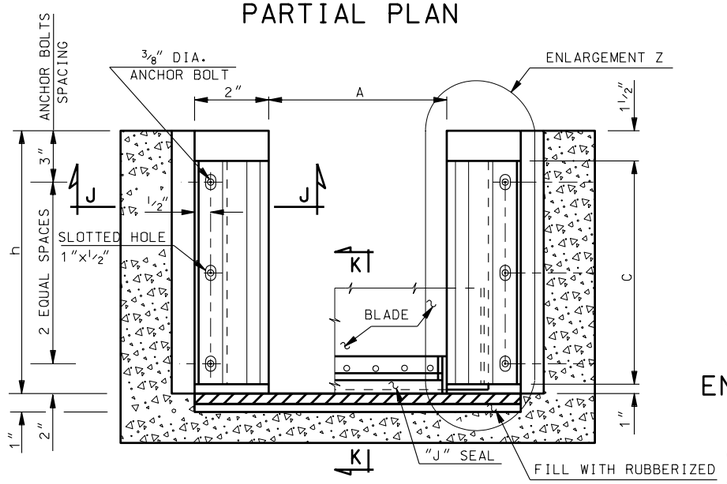

SECTION H-H
TYPE Ga
REQUIRED WITH FLUME

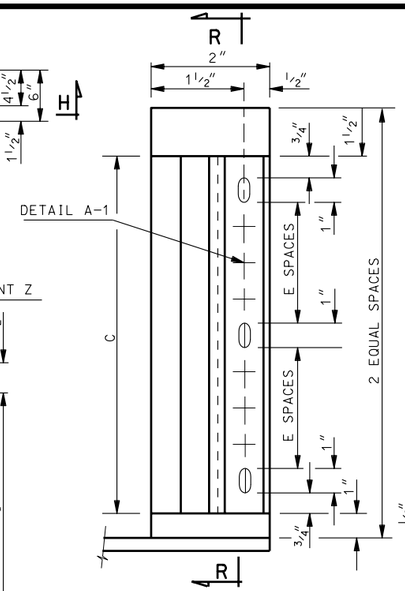

ENLARGEMENT Z

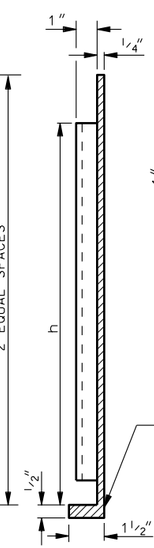

SECTION R-R

NOTE:
PLUG WELD SHEET METAL GUIDE TO FRAME. USE E6011 ELECTRODE.

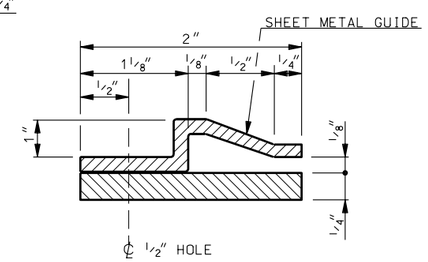

SECTION J-J

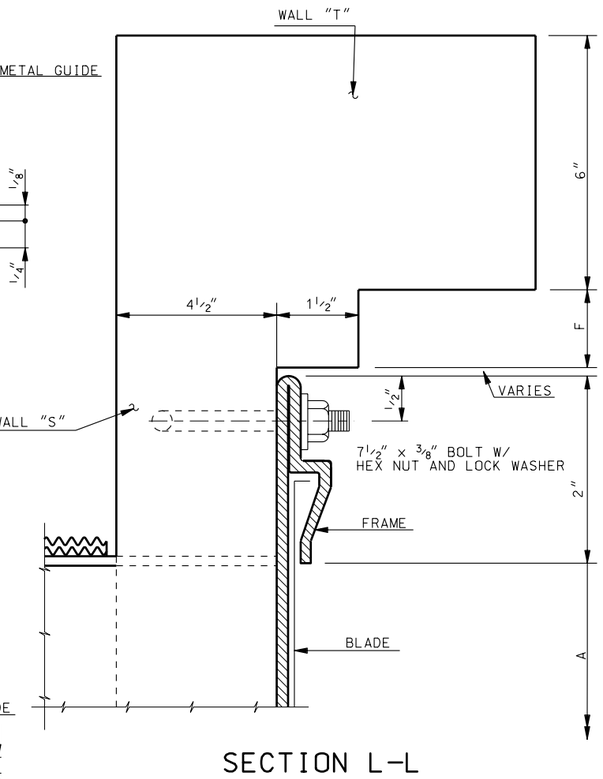

SECTION L-L

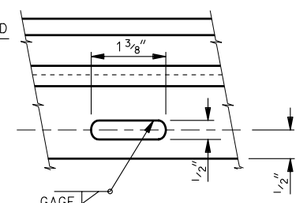

DETAIL A-1

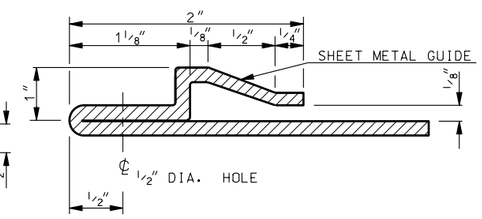

SECTION M-M

NOTE:
WELD FRAME WATER-TIGHT TO THE END OF THE METAL PIPE. GAGE OF METAL PIPE IS THE SAME AS THE GAGE OF THE FRAME.

NOTE:
NUMBER OF SLOT WELDS TO ONE LESS THAN THE NUMBER OF E SPACES.

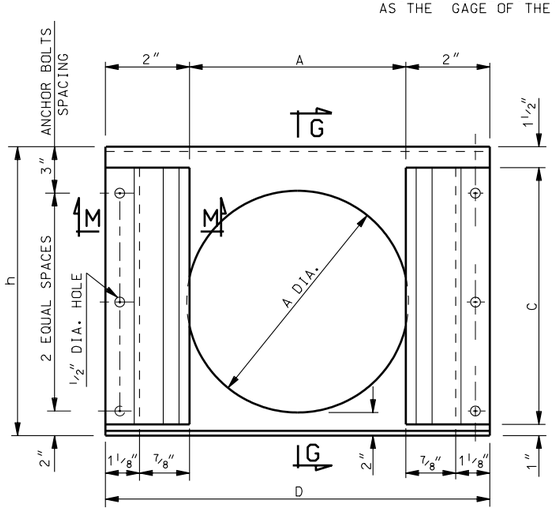

TYPE Ga

REQUIRED WITH PIPE
ROUND PIPE SHOWN
ARCH PIPE SIMILAR

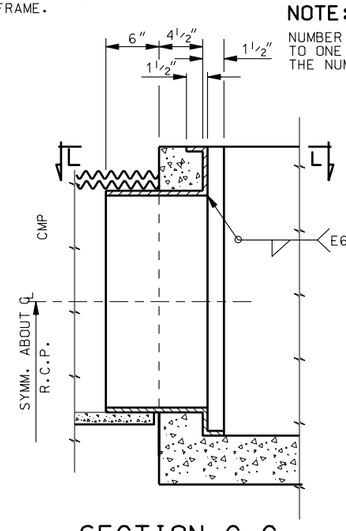

SECTION G-G

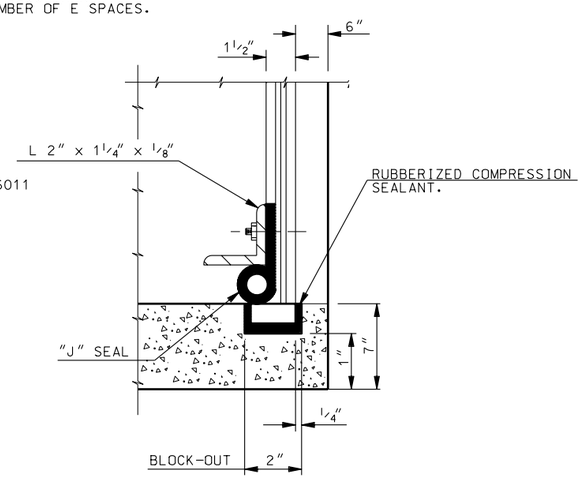

SECTION K-K

NOTES:

1. INSTALL SHEET METAL FRAME PERPENDICULAR TO THE FLOOR OF THE BOX PRIOR TO CASTING THE WALLS. BE CAREFUL NOT TO SCAR OR OTHERWISE DAMAGE THE FRAYING SURFACES BETWEEN THE BLADE AND THE FRONT FACE OF THE FRAME SO THAT FRAME REMAINS WATER-TIGHT WHEN CLOSED.
2. FABRICATE THE BLADE AND FRAME OF ZINC COATED STEEL. CONFORM TO AASHTO M 218

DESIGN DATA

HS-20 OR INTERSTATE ALTERNATE LOADING IN ACCORDANCE WITH CURRENT AASHTO AND INTERIM SPECIFICATIONS.
CAST-IN-PLACE STRUCTURAL CONCRETE: Fc = 1,400 psi, n = 8
REINF. STEEL: Fs = 24,000 psi

GENERAL NOTES:

1. ALL BOLTS: A 307 BOLTS UNLESS OTHERWISE INDICATED.
2. GALVANIZED FASTENERS:CONFORM TO ASTM STANDARDS A 307 AND A 164.

NO.	DATE	APPR.	REMARKS

REVISIONS

UTAH DEPARTMENT OF TRANSPORTATION
STANDARD DRAWINGS FOR ROAD AND BRIDGE CONSTRUCTION
SALT LAKE CITY, UTAH

RECOMMENDED FOR APPROVAL — JAN.01,2005 DATE
CHAIRMAN STANDARDS COMMITTEE APPROVED — JAN.01,2005 DATE
DEPUTY DIRECTOR

STANDARD DIVERSION BOX W/INTERCHANGEABLE WALLS, HAND SLIDE GATE DETAILS
STANDARD DRAWING TITLE

STD DWG
DB 2C

DGN File:N:\Esd\Standard Drawings\Imperial\2005Approved\Diversion Boxes (DB)\db02c.dgn
15-DEC-2004

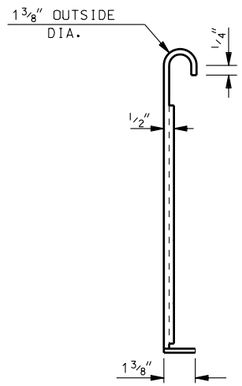

SECTION THRU PIPE OR PIPE ARCH BLADE

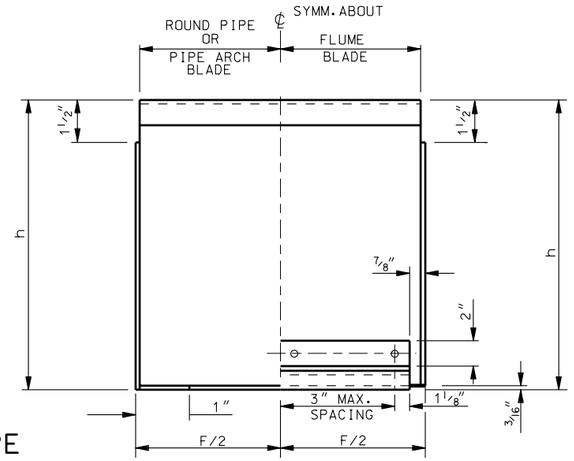

HAND SLIDE GATE BLADE DETAILS

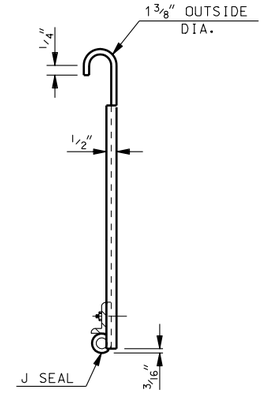

SECTION THRU FLUME BLADE

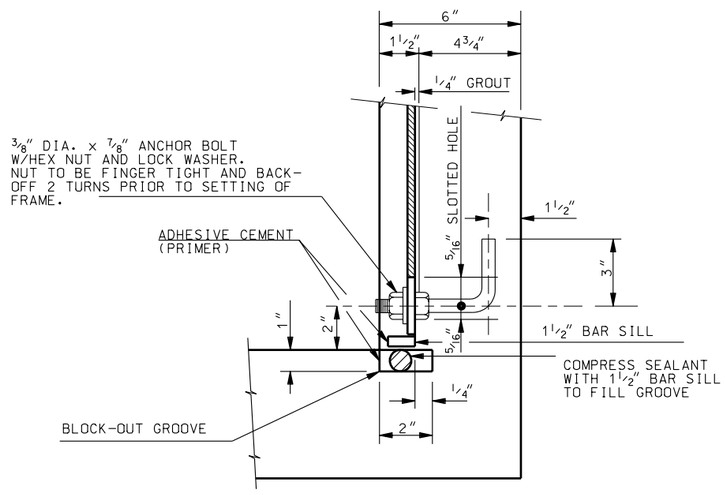

INSTALLATION SKETCH A

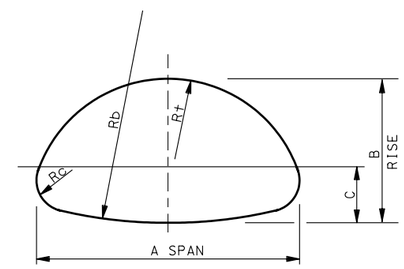

PIPE-ARCH DIMENSIONS					
SPAN	RISE	LAYOUT DIMENSIONS			
		C	Rc	R+	Rb
36"	22"	6 1/4"	5"	18 1/4"	73 1/4"

NOTE: PIPE-ARCH LAYOUT IN SHEET METAL FRAME TO CONFORM TO THESE DIMENSIONS.

NOTES:

1. USE STRUCTURAL CARBON FOR ALL BAR AND ANGLE STEEL CONFORMING TO AASHTO DESIGNATION M 270, GRADE 36. HOT-DIP GALVANIZE AFTER FABRICATION IN ACCORDANCE WITH AASHTO DESIGNATION M 111.

2. FABRICATE GUIDES, BLADES, AND SHEET METAL FRAMES OF HAND SLIDE GATES OF ZINC COATED STEEL CONFORMING TO THE REQUIREMENTS OF SPECIFICATION ASTM A 653.

3. "J" SEALS: MOLDED OR EXTRUDED NEOPRENE OR EPDM (ETHYLENE PROPYLENE) OF PROPER LENGTH, CURED TO ENSURE A DENSE HOMOGENEOUS CROSS SECTION FREE FROM PITTING, BLISTERS OR POROSITY, MEETING THE FOLLOWING SPECIFICATIONS WHEN TESTED IN ACCORDANCE WITH APPLICABLE PROVISIONS OF ASTM D 412, D 471, D 2240 AND D 395.

   SHORE A DUROMETER HARDNESS---------- 60 ± 5

	NEOPRENE	EPDM
MINIMUM ELONGATION----------	450%	35%
ULTIMATE TENSILE STRENGTH---------	2,500 psi	2,000 psi
COMPRESSION SET (MAX.)----------	30%	25%

   BOTH MATERIALS

   ABSORPTION (2 DAYS)----------5% BY WEIGHT
   TENSILE STRENGTH (48 HOURS IN OXYGEN 8 PERCENT OF BEGINNING STRENGTH @ 70°C AND 300 psi PRESSURE.)
   ACCURATELY LOCATE AND DRILL ALL HOLES IN SEAL WITH 1/8" OVERSIZE HOLLOW-CORE DRILL.

4. COMPRESSION SEALANT: 1 1/2 INCH DIA., TOP GRADE BUTYL RUBBER OF DENSE, HIGHLY COMPRESSIBLE, STABLE MATERIAL WITH GOOD SAG AND ADHESION PROPERTIES PRODUCED FROM BLENDS OF REFINED HYDROCARBON RESINS AND PLASTICIZING COMPOUNDS, REINFORCED WITH INERT MINERAL FILLERS CONTAINING NO SOLVENTS, IRRITATING FUMES OR OBNOXIOUS ODORS NOT DEPENDENT ON OXIDIZING, EVAPORATING OR CHEMICAL ACTION FOR ADHESIVE OR COHESIVE STRENGTH HAVING THE FOLLOWING PROPERTIES:

CHEMICAL COMPOSITION COMPONENTS	MIN.	MAX.	ASTM SPEC.
BITUMEN (HYDROCARBON PLASTIC CONTAIN) % BY WT.----	50	70	D4,D140
INERT MINERAL FILLER % BY WT.----------	30	50	D545
VOLATILE MATTER % BY WT.----------		2.0	D6

PHYSICAL PROPERTIES	REQUIRED	
SPECIFIC GRAVITY @ 77°F (25°C)----------	1.20 TO 1.35	D7
DUCTILITY @ 77°F 25°C MIN. ----------	5.0 c. m.	D113
SOFTENING POINT @ 77°F MIN.----------	320°F	D36
FLASH POINT c.o.c. MIN.----------	600°F	D92
FIRE POINT c.o.c. MIN.----------	625°F	D92
PENETRATION 77°F (25°C) 150 gs. 5 sec----------	50 to 120	D217

   TESTS:

   REJECT IF ONE OR MORE TEST SPECIMENS OF THE LOT REPRESENTING THE SPECIMENT, FAIL TO MEET ASTM REQUIREMENTS

5. BOTH FRAMES CAN BE USED WITH TYPE "G" HAND SLIDE GATES. SPECIFY WHETHER TYPE Ga OR Gb FRAME IS REQUIRED. SEE STD DWG DB 2C FOR FRAME TYPES. NORMALLY THE NUMBER OF GATES EQUAL THE NUMBER OF OPENINGS LESS ONE.

6. THE RUBBER SEAL FOR FLUSH BOTTOM CLOSURE: CONFORM TO ASTM D 2000.

7. MAKE FLUSH WITH FLOOR OF BOX TOP OF BAR SILL AFTER FRAME HAS BEEN PROPERLY PLUMBED AND LEVELED. GROUT FRAME IN PLACE WITH A CEMENT GROUT.

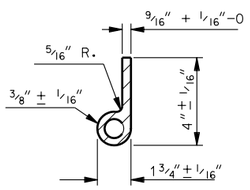

"J" SEAL

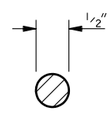

COMPRESSION SEALANT

FLEXIBLE JOINT SEALANT TYP. CROSS-SECTION

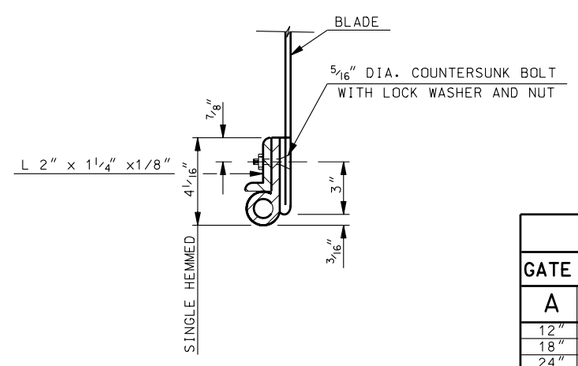

PART SECT. THRU FLUME BLADE

DIMENSION SCHEDULE															
GATE SIZE		FLUME							PIPE OR PIPE ARCH						
A	B	FRAME		GUIDE			BLADE		SHEET METAL FRAME				BLADE		
		D	h	C	GAGE	E	F	GAGE	A	h	D	GAGE	F	GAGE	
12"	12"	1'-4 1/4	1'-9	1'-6 1/2	16	2	1'-1 1/2	16	12"	1'-9	1'-4 1/4	16	1'-1 1/2	16	
18"	18"	1'-10 1/4	2'-3	2'-0 1/2	14	3	1'-7 1/2	14	18"	2'-3	1'-10 1/4	14	1'-7 1/2	14	
24"	24"	2'-4 1/4	2'-9	2'-6 1/4	10	4	2'-1 1/2	10	24"	2'-9	2'-4 1/4	10	2'-1 1/2	10	
36"	24"	3'-5 1/4	2'-7	2'-4 1/2	10	4	3'-1 1/2	8	36"	2'-7	3'-5 1/4	10	3'-1 1/2	8	

REVISIONS

NO.	DATE	APPR.	REMARKS

UTAH DEPARTMENT OF TRANSPORTATION
STANDARD DRAWINGS FOR ROAD AND BRIDGE CONSTRUCTION
SALT LAKE CITY, UTAH

RECOMMENDED FOR APPROVAL — JAN.01,2005 DATE
CHAIRMAN STANDARDS COMMITTEE APPROVED — JAN.01,2005 DATE
DEPUTY DIRECTOR

STANDARD DIVERSION BOX TYPE "G" HAND SLIDE GATE DETAILS

STANDARD DRAWING TITLE

STD DWG
DB 2D

DGN Files:N:\Esa\Standard_Drawings\Imperial\2005Approved\Diversion Boxes (DB)\db02d.dgn
15-DEC-2004

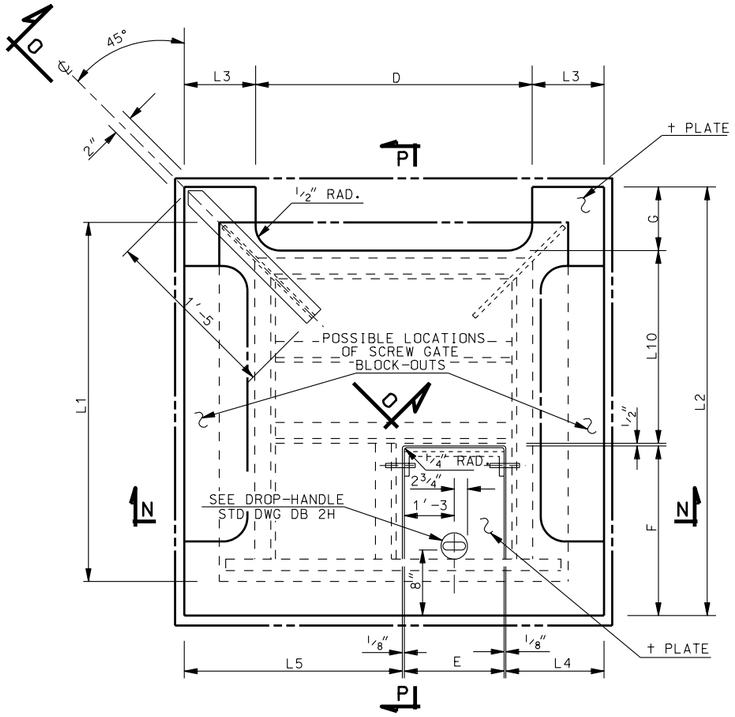

SOLID COVER TYPE ''A'' DETAILS
PLAN

SOLID COVER TYPE "A" SUB-FRAME TYPE "I" DIMENSIONS

LINE NO.	SCREW GATE		WALL SIZE	BLOCK-OUT		HINGED LID			COVER PLATE					SUB-FRAME TYPE I						
	A	B	L1	D	G	E	F	†	L2	†	L3	L4	L5	L6	L7	L8	L9	L10	L11	L12
1	36	36	4'-4	3'-5 1/4	8 1/2"	2'-6	3'-4 5/8	1/4"	5'-3	1/4"	10 7/8"	1'-0	1'-8 3/4	6 1/2"	8"	9 3/4"	9 3/16"	1'-1 3/8	4'-3 1/2	3'-3
2	42	42	4'-10	4'-0 1/2	9 1/2"			1/4"	5'-9	1/4"	10 1/4"	1'-1	2'-1 3/4	7 1/2"	1'-0	1'-2 3/4	10 5/8"	1'-6 3/8	4'-9 1/2	3'-7
3	48	48	5'-6	4'-7 1/2	9 1/2"			1/4"	6'-5	1/4"	10 3/4"	1'-1	2'-9 3/4	7 1/2"	1'-8	1'-10 3/4	10 5/8"	2'-2 3/8	5'-5 1/2	4'-3
4	36	24	4'-4	3'-5 1/4	8 1/2"			1/4"	5'-3	1/4"	10 7/8"	1'-0	1'-8 3/4	6 1/2"	8"	9 3/4"	9 3/16"	1'-1 3/8	4'-3 1/2	3'-3
5	48	30	5'-4	4'-6 1/4	9 1/2"			1/4"	6'-3	1/4"	10 3/8"	1'-1	2'-7 3/4	7 1/2"	1'-6	1'-8 3/4	10 5/8"	2'-0 3/8	5'-3 1/2	4'-1
6	60	36	6'-6	5'-7 1/4	9 1/2"			3/8"	7'-5	3/8"	10 7/8"	1'-1	3'-9 3/4	7 1/2"	2'-8	2'-10 3/4	10 5/8"	3'-2 3/8	6'-5 1/2	5'-3
7	72	42	7'-6	6'-7 1/4	9 1/2"			3/8"	8'-5	3/8"	10 7/8"	1'-1	4'-9 3/4	7 1/2"	3'-8	3'-10 3/4	10 5/8"	4'-2 3/8	7'-5 1/2	6'-3
8	72	48	7'-6	6'-7 1/4	9 1/2"	2'-6	3'-4 5/8	3/8"	8'-5	3/8"	10 7/8"	1'-1	4'-9 3/4	7 1/2"	3'-8	3'-10 3/4	10 5/8"	4'-2 3/8	7'-5 1/2	6'-3

NOTE:
DRILL 2- 1 1/16" DIA. HOLES IN BOTH SUB-FRAME AND HINGED LID.

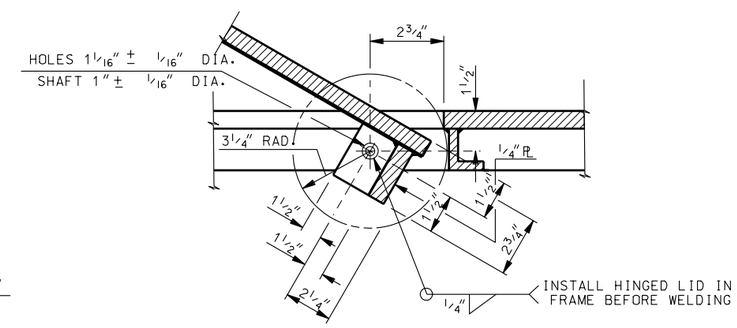

ENLARGEMENT X

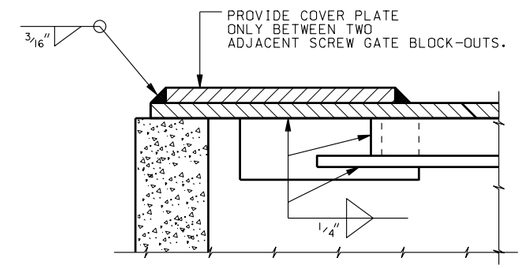

SECTION O-O

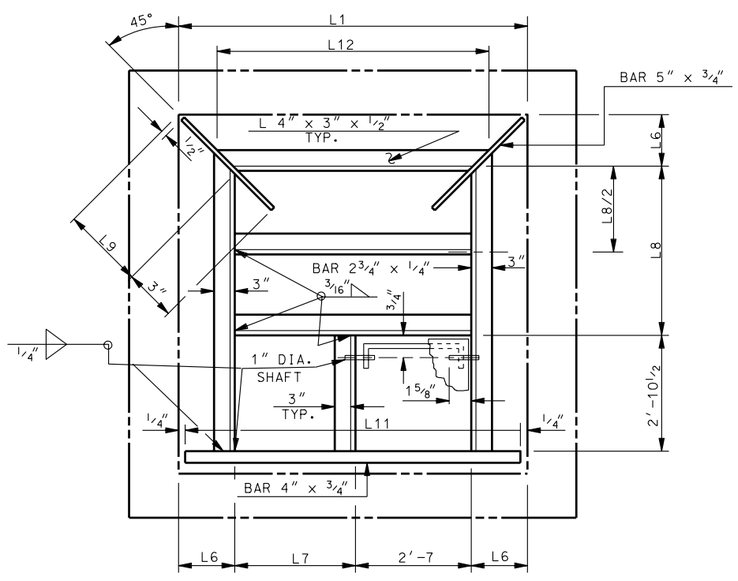

SOLID COVER TYPE ''A'' DETAILS
SUB-FRAME TYPE ''I'' PLAN

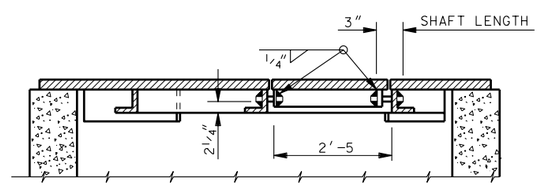

SECTION N-N

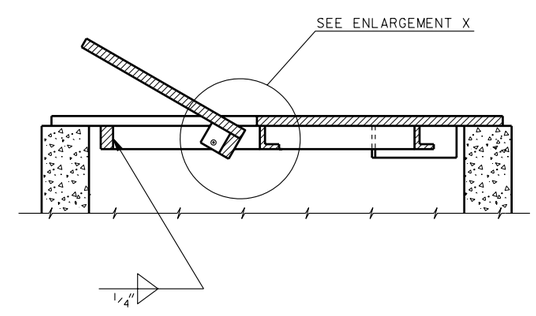

SECTION P-P

NO.	DATE	APPR.	REMARKS

REVISIONS

UTAH DEPARTMENT OF TRANSPORTATION
STANDARD DRAWINGS FOR ROAD AND BRIDGE CONSTRUCTION
SALT LAKE CITY, UTAH

RECOMMENDED FOR APPROVAL — JAN.01.2005 DATE
CHAIRMAN STANDARDS COMMITTEE APPROVED — JAN.01.2005 DATE
DEPUTY DIRECTOR

STANDARD DIVERSION BOX
HINGED LID
(SOLID COVER PLATE)
TYPE"A" DETAILS
TYPE I PLAN

STANDARD DRAWING TITLE

STD DWG
DB 2E

DGN File: N:\Esd\Standard_Drawings\Imperial\2005Approved\Diversion Boxes (DB)\db02e.dgn
15-DEC-2004

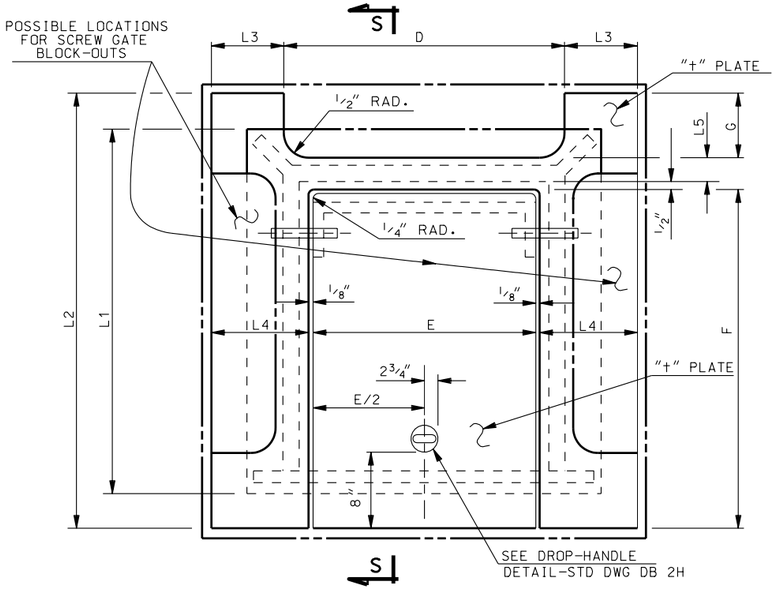

SOLID COVER TYPE "A" DETAILS
PLAN

SOLID COVER TYPE ''A'' SUB-FRAME TYPE II DIMENSIONS

LINE NO.	SCREW GATE		WALL SIZE	BLOCK-OUT		HINGED LID			COVER PLATE					SUB-FRAME TYPE II				
	A	B	L1	D	G	E	F	+	L2	+	L3	L4	L5	L6	L7	L8	L9	L10
1	18	18	2'-6	1'-10 1/4	8 1/2"	1'-8 1/4	2'-6 1/2	1/4"	3'-5	1/4"	9 3/8"	10 1/4"	1 1/2"	2'-5 1/2	4 3/4"	2'-0 1/2	4 1/4"	1'-11 1/2
2	24	24	3'-0	2'-4 1/4	8 1/2"	2'-2 1/4	3'-0 1/2	1/4"	3'-11	1/4"	9 3/8"	10 1/4"	1 1/2"	2'-11 1/2	4 3/4"	2'-6 1/4	4 1/2"	2'-5 1/8
3	30	30	3'-10	2'-11 1/4	8 1/2"	2'-6	3'-10 1/2	1/4"	4'-9	1/4"	10 1/8"	1'-1 3/8	1 1/2"	3'-9 1/2	7 1/8"	3'-4 1/4	4 1/2"	3'-3 1/8

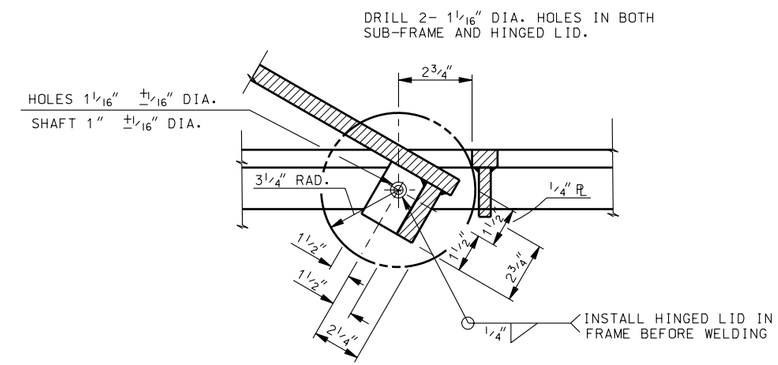

ENLARGEMENT Y

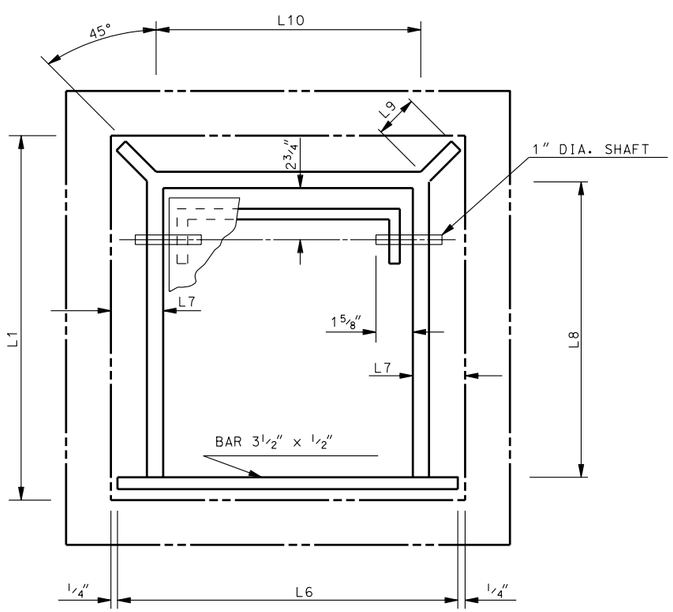

SOLID COVER TYPE "A" DETAILS
SUB-FRAME TYPE II PLAN

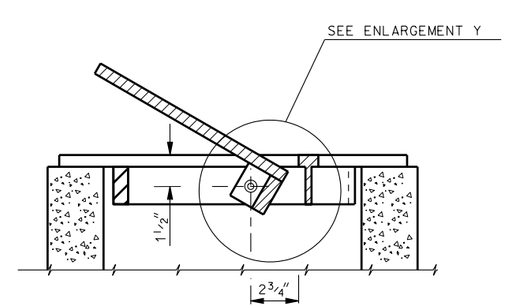

SECTION S-S

USE BAR 3 1/2" x 1/2" DIA. FOR ALL MEMBERS OF SUB-FRAME EXCEPT AS NOTED.

REVISIONS

NO.	DATE	APPR.	REMARKS

UTAH DEPARTMENT OF TRANSPORTATION
STANDARD DRAWINGS FOR ROAD AND BRIDGE CONSTRUCTION
SALT LAKE CITY, UTAH

RECOMMENDED FOR APPROVAL — JAN.01,2005 DATE
CHAIRMAN STANDARDS COMMITTEE APPROVED — JAN.01,2005 DATE
DEPUTY DIRECTOR

STANDARD DIVERSION BOX
HINGED LID
(SOLID COVER PLATE)
TYPE "A" DETAILS
TYPE II PLAN
STANDARD DRAWING TITLE

STD DWG
DB 2F

DGN File:N:\Eng\Standard Drawings\Imperial\2005Approved\Diversion Boxes (DB)\db02f.dgn
15-DEC-2004

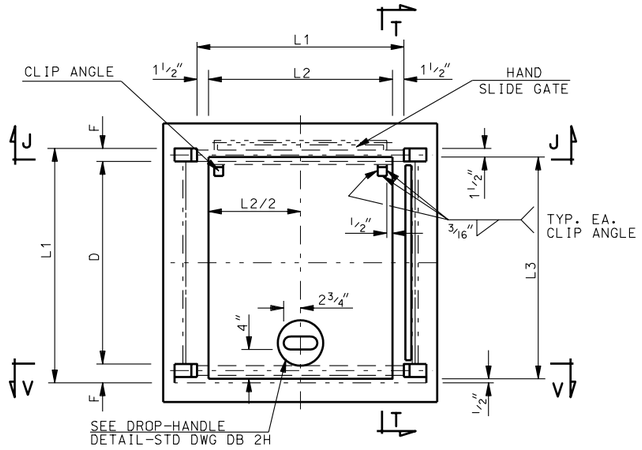

PLAN

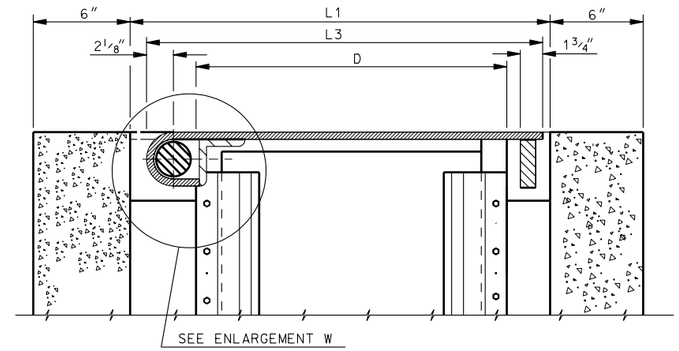

SECTION T-T

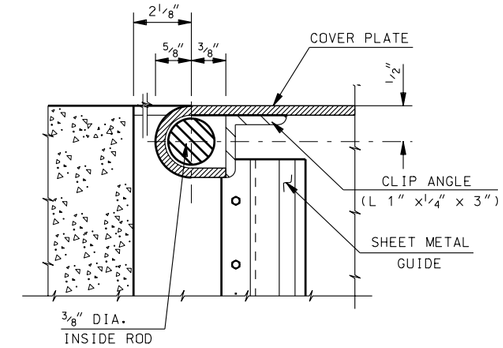

ENLARGEMENT W

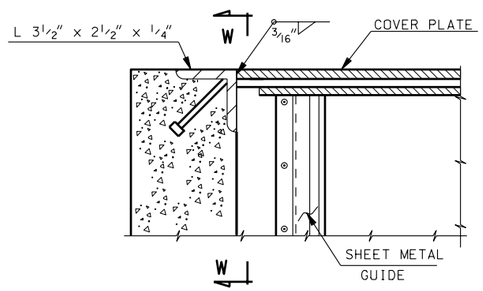

SECTION J-J

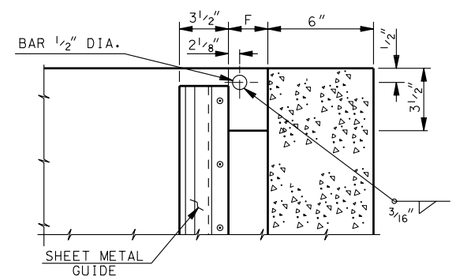

SECTION W-W

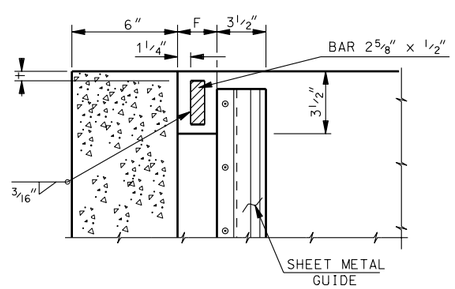

SECTION X-X

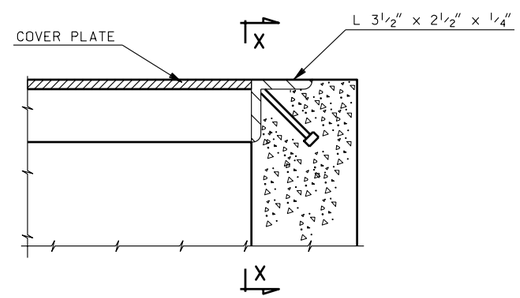

SECTION V-V

SOLID COVER TYPE ''B'' DETAILS

NOTES:

1. PREFORMED JOINT MATERIAL: AASHTO DESIGNATION M 213
2. ALL STRUCTURAL STEEL EITHER STRUCTURAL CARBON STEEL CONFORMING TO AASHTO DESIGNATION M 270, GRADE 36 OR A RAISED PATTERN CARBON STEEL (U.S. STEEL S 300) OR USED IN SIDEWALK LOCATIONS ONLY.
3. HOT DIP GALVANIZE HINGED LID SOLID COVERS AFTER FABRICATION IN ACCORDANCE WITH AASHTO DESIGNATION M 111 (ASTM A 123).
4. WHEN HINGED LID IS PLACED IN SIDEWALK LOCATIONS,PROVIDE A RUBBED FINISH FOR ALL BEARING SURFACES AT TOP OF WALL, AT THE DISCRETION OF THE ENGINEER, RECESS THE COVER PLATE THE THICKNESS OF THE COVER PLATE AND USE A CEMENT GROUT ON ALL BEARING SURFACES TO LEVEL THE HINGED LID.
5. DO NOT USE THIS DRAWING IN ROADWAY APPLICATIONS WHERE THE HINGED LID IS SUBJECTED TO A WHEEL LOAD.
6. AUTOMATICALLY END WELD THE 1/2" x 4 1/8" H4-L NELSON CONCRETE ANCHOR TO THE FILLET OF THE ANGLE. CENTER ANCHOR ABOUT FILLET.

DESIGN DATA

THE DESIGN IS IN ACCORDANCE WITH CURRENT AASHTO AND INTERIM SPECIFICATIONS.
LOADING - COVER PLATES ARE DESIGNED FOR A LOAD OF 600 lbs/sq ft
Fs=20,000 psi

SOLID COVER TYPE ''B'' DIMENSIONS

LINE NO.	HAND SLIDE GATE		WALL SIZE	COVER PLATE				
	A	B	L1	D	F	L2	L3	t
1	12	12	2'-0	1'-4 1/4	3"	1'-9	1'-10	1/4"
2	18	18	2'-6	1'-10 1/4	3"	2'-3	2'-4	1/4"
3	24	24	3'-0	2'-4 1/4	3"	2'-9	2'-10	1/4"
4	36	24	4'-4	3'-5 1/4	5"	4'-1	4'-2	1/4"

REVISIONS

NO.	DATE	APPR.	REMARKS

UTAH DEPARTMENT OF TRANSPORTATION
STANDARD DRAWINGS FOR ROAD AND BRIDGE CONSTRUCTION
SALT LAKE CITY, UTAH

RECOMMENDED FOR APPROVAL — JAN.01.2005 DATE
CHAIRMAN STANDARDS COMMITTEE APPROVED — JAN.01.2005 DATE
DEPUTY DIRECTOR

STANDARD DIVERSION BOX
HINGED LID SOLID COVER
TYPE "B" DETAILS

STANDARD DRAWING TITLE

STD DWG
DB 2G

DGN File: N:\Esd\Standard_Drawings\Imperial\2005Approved\Diversion Boxes (DB)\db02g.dgn
15-DEC-2004

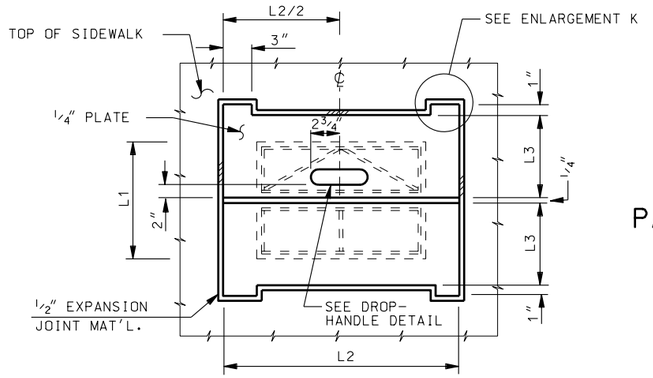

PLAN

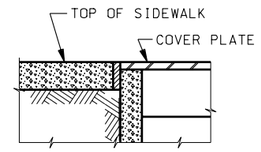

PARTIAL SECTION

PAINT THIS SIGN ON COVER PLATE AFTER FABRICATION WITH LETTERS 2" IN HEIGHT: "RAISE COVER PLATE TO CHANGE GATES"

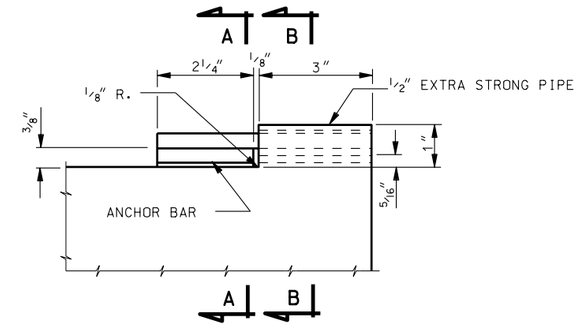

ENLARGEMENT K

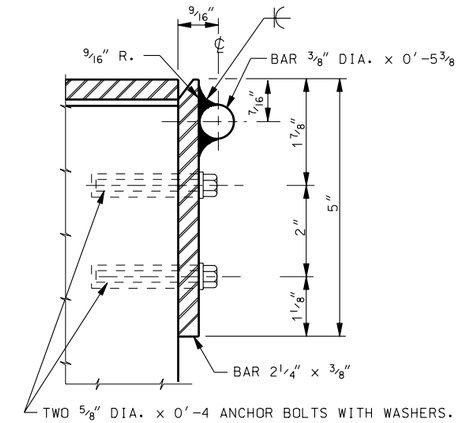

SECTION A-A

SOLID COVER TYPE "C" DETAILS

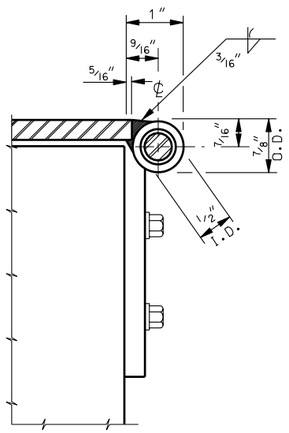

SECTION B-B

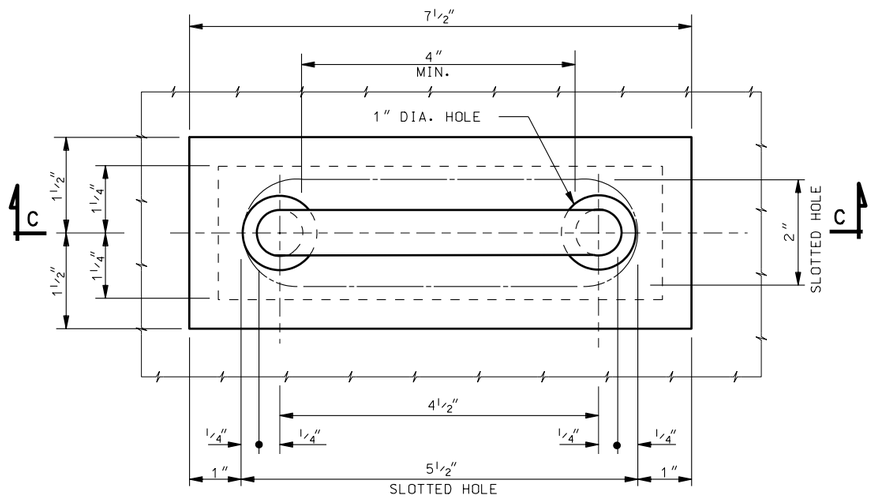

PLAN

SOLID COVER TYPE "C" SUB-FRAME TYPE III DIMENSIONS										
LINE NO.	HAND SLIDE GATE		WALL SIZE	COVER PLATE			SUB-FRAME TYPE III			
	A	B	L1	L2	L3	+	L4	L5	L6	BAR SIZE
1	12	12	2'-0	3'-0	1'-5 7/8	1/4"	—	—	—	—
2	18	18	2'-6	3'-6	1'-8 7/8	1/4"	—	—	—	—
3	24	24	3'-0	4'-0	1'-11 7/8	3/16"	1'-4 3/4	1'-5 3/4	1'-11	3 1/2 x 1/2
4	36	36	4'-4	5'-4	2'-1 7/8	3/16"	2'-0 3/4	2'-1 3/4	2'-10 1/4	3 1/2 x 1/2

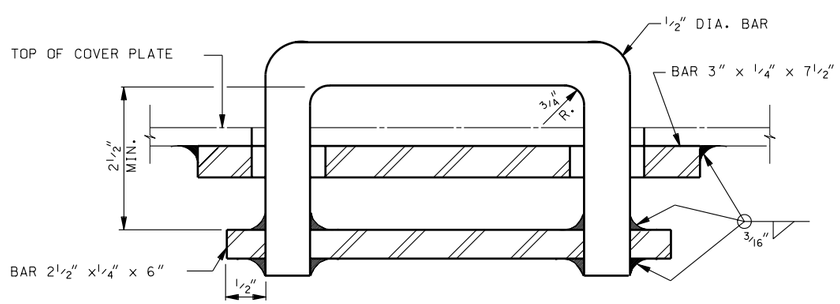

SECTION C-C
DROP HANDLE DETAIL

REQUIRE EITHER ONE DROP-DOWN HANDLE IF LOCATED IN SIDEWALK OR A SLOTTED HAND HOLE 2"x 5 1/2" FOR EACH DIVERSION BOX COVER

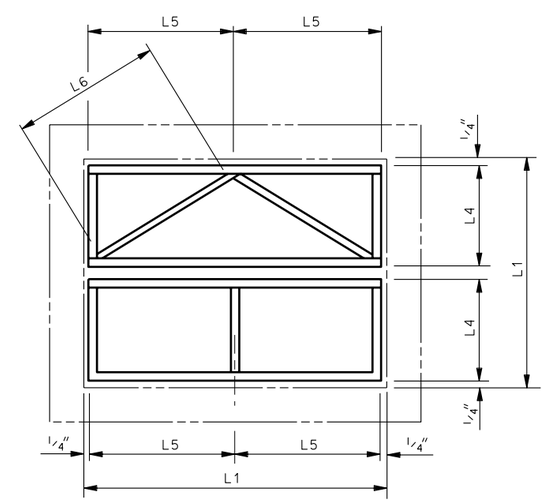

SUB-FRAME TYPE III

REVISIONS

NO.	DATE	APPR.	REMARKS

UTAH DEPARTMENT OF TRANSPORTATION
STANDARD DRAWINGS FOR ROAD AND BRIDGE CONSTRUCTION
SALT LAKE CITY, UTAH

RECOMMENDED FOR APPROVAL — JAN.01,2005 DATE
CHAIRMAN STANDARDS COMMITTEE APPROVED — JAN.01,2005 DATE
DEPUTY DIRECTOR

STANDARD DIVERSION BOX
HINGED LID
SOLID COVER
TYPE "B" AND "C" DETAILS

STANDARD DRAWING TITLE

STD DWG
DB 2H

DGN File:N:\Esd\Standard.Drawings\Imperial\2005Approved\Diversion Boxes (DB)\db02h.dgn
15-DEC-2004

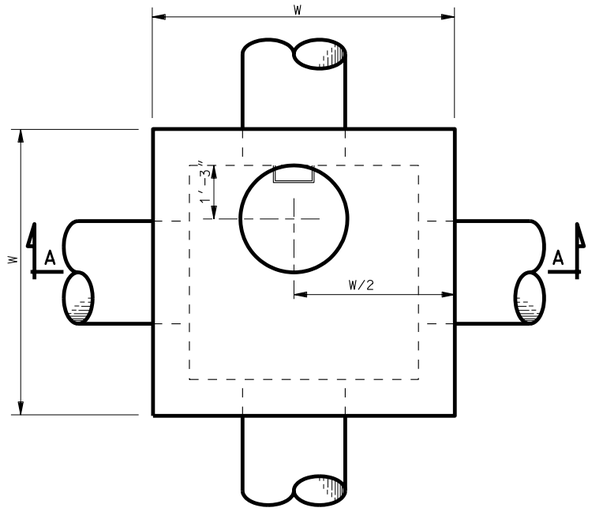

BOX PLAN

FURNISH PRECAST GRADE RINGS IN HEIGHTS OF 4 INCH, 6 INCH OR 8 INCHES TOTAL HEIGHT OF GRADE RINGS NOT TO EXCEED 1 FOOT.

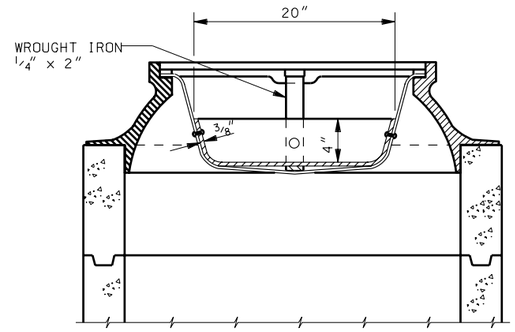

SECTION B-B

(PAN SECTION - LID REMOVED)

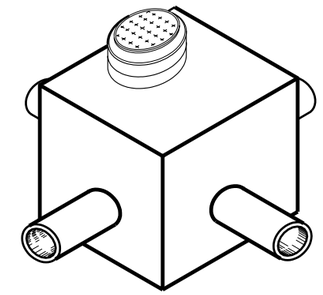

ISOMETRIC VIEW

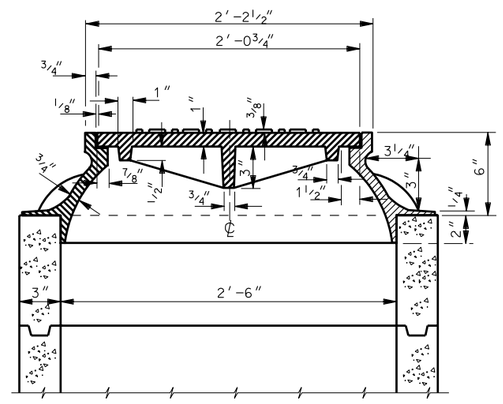

SECTION C-C

(LID SECTION - PAN REMOVED)

USE PRECAST CONCRETE GRADE RINGS TO ACHIEVE FINISH GRADE ELEVATION. INCLUDE COST IN CONTRACT PRICE FOR MANHOLE FRAME AND COVER.

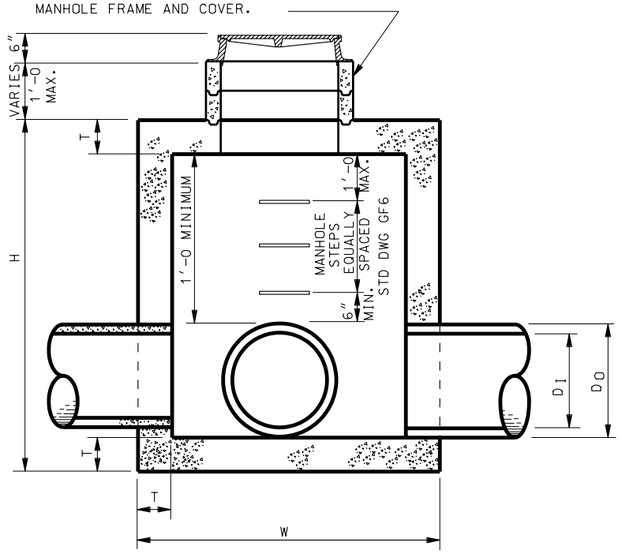

SECTION A-A

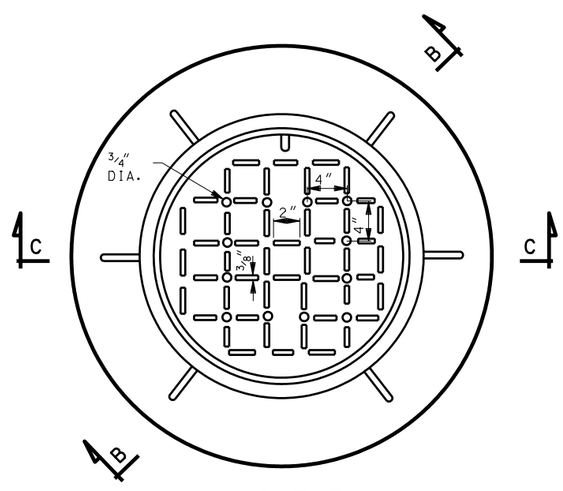

MANHOLE PLAN

GENERAL NOTES FOR DB 3A TO DB 3C

1. FOR ALL REINFORCING STEEL USE COATED DEFORMED BILLET-STEEL BARS CONFORMING TO AASHTO DESIGNATION M 284 OR M 111 AND M 31 GRADE 60.
2. FURNISH MANHOLE FRAME AND COVER IN EITHER DUCTILE IRON (ASTM A 536 GRADE 60) OR CAST GRAY IRON : AASHTO M 105, CLASS 30B.
3. CHAMFER EXPOSED CORNERS 3/4" EXCEPT WHERE NOTED OTHERWISE.
4. 2 INCHES COVER TO REINFORCING STEEL EXCEPT WHERE NOTED OTHERWISE.
5. USE CONCRETE CLASS AA(AE) FOR ALL CAST-IN-PLACE CONCRETE EXCEPT WHERE NOTED OTHERWISE.
6. USE TYPE II CEMENT (LOW ALKALI) UNLESS SPECIFIED OTHERWISE IN THE SPECIAL PROVISIONS.
7. SEE ROADWAY PLANS FOR DETAILS OF INSTALLATION, INCLUDING LOCATION OF UNITS, NUMBER OF UNITS REQUIRED, TYPE OF UNITS, LOCATION AND SIZE OF PIPE(S).
8. SEE STD DWG GF 6 FOR MANHOLE STEP DETAILS.

DESIGN DATA

MS 18 (HS 20) OR INTERSTATE ALTERNATE LOADING IN ACCORDANCE WITH CURRENT AASHTO AND INTERIM SPECIFICATIONS.

STRUCTURAL CONCRETE: fc = 1400 psi,
fs (REINF.) = 24,000 psi,
n = 8

QUANTITIES

STRUCTURAL CONCRETE
REINFORCING STEEL
— SEE SCHEDULE OF INSTALLATION

INDEX OF SHEETS

1- SITUATION AND LAYOUT
2- SCHEDULE OF INSTALLATION 0 " TO 42" RCP AND 0 " TO 54" CMP
3- SCHEDULE OF INSTALLATION 48" TO 72" RCP AND 60" TO 84" CMP

REVISIONS

NO.	DATE	APPR.	REMARKS

UTAH DEPARTMENT OF TRANSPORTATION
STANDARD DRAWINGS FOR ROAD AND BRIDGE CONSTRUCTION
SALT LAKE CITY, UTAH

RECOMMENDED FOR APPROVAL — JAN.01,2005 DATE
CHAIRMAN STANDARDS COMMITTEE APPROVED — JAN.01,2005 DATE
DEPUTY DIRECTOR

STANDARD DIVERSION BOX WITH MANHOLE COVER SITUATION AND LAYOUT

STANDARD DRAWING TITLE

STD DWG
DB 3A

DGN File:N:\Esd\Standard Drawings\Imperial\2005\Approved\Diversion Boxes (DB)\db03a.dgn
15-DEC-2004

SCHEDULE OF INSTALLATION

LINE	DIMENSIONS H	W	T	A	MAX. PIPE DIA. RCP	MAX. PIPE DIA. CMP	REINFORCING STEEL S1 a	S1 b	S1 L'GTH	S1 QT	W1 L'GTH	W1 QT	W2 N	W2 L'GTH	W2 QT	P1 L'GTH	P1 QT	MAN STEP QT	QUANTITIES CONC. CU. YDS.	REINF. STEEL LBS.	FRAME COVER LBS.	LINE
1	4'-0	5'-0	8"	10"	15"	18"	18"	4'-0	7'-0	12	3'-0	20	2	4'-8	20	3'-6	4	2	2.255	262.1	245	1
2	4'-4	5'-0	↑	6"	18"	21"	↑	4'-0	7'-0	↑	3'-4	↑	3	4'-8	24	↑	↑	2	2.397	288.6	↑	2
3	4'-8	5'-0		8"	24"	24"		4'-0	7'-0		3'-8		3	4'-8	24			2	2.540	295.5		3
4	5'-0	6'-0		10"	24"	30"		5'-0	8'-0		4'-0		3	5'-8	24			3	3.588	340.0		4
5	5'-4	↑		6"	27"	36"		↑	↑		4'-4		4	↑	28			3	3.764	370.6		5
6	5'-8			8"	30"	36"					4'-8		4		28			3	3.939	377.6		6
7	6'-0			10"	36"	42"					5'-0		4		28			4	4.115	384.5		7
8	6'-4			6"	36"	48"					5'-4		5		32			4	4.290	415.1		8
9	6'-8			8"	42"	48"					5'-8		5		32			4	4.466	422.1		9
10	7'-0			10"	↑	54"					6'-0		5		32			5	4.641	429.0		10
11	7'-4			6"		↑					6'-4		6		36			5	4.817	459.6		11
12	7'-8			8"							6'-8		6		36			5	4.993	466.6		12
13	8'-0			10"							7'-0		6		36			6	5.168	473.5		13
14	8'-4			6"							7'-4		7		40			6	5.344	504.1		14
15	8'-8			8"							7'-8		7		40			6	5.519	511.1		15
16	9'-0			10"							8'-0		7		40			7	5.695	518.0		16
17	9'-4			6"							8'-4		8		44			7	5.871	548.6		17
18	9'-8			8"							8'-8		8		44			7	6.046	555.6		18
19	10'-0			10"							9'-0		8		44			8	6.223	562.5		19
20	10'-4			6"							9'-4		9		48			8	6.397	593.1		20
21	10'-8			8"							9'-8		9		48			8	6.573	600.1		21
22	11'-0			10"							10'-0		9		48			9	6.748	607.0		22
23	11'-4			6"							10'-4		10		52			9	6.924	637.6		23
24	11'-8			8"							10'-8		10		52			9	7.100	644.6		24
25	12'-0			10"							11'-0		10		52			10	7.275	651.5		25
26	12'-4			6"							11'-4		11		56			10	7.451	682.1		26
27	12'-8			8"							11'-8		11		56			10	7.626	689.1		27
28	13'-0			10"							12'-0		11		56			11	7.802	696.0		28
29	13'-4			6"							12'-4		12		60			11	7.978	726.6		29
30	13'-8			8"							12'-8		12		60			11	8.153	733.6		30
31	14'-0			10"							13'-0		12		60			12	8.329	740.5		31
32	14'-4			6"							13'-4		13		64			12	8.504	771.1		32
33	14'-8			8"							13'-8		13		64			12	8.680	778.1		33
34	15'-0			10"							14'-0		13		64			13	8.855	785.0		34
35	15'-4			6"							14'-4		14		68			13	9.031	815.6		35
36	15'-8			8"							14'-8		14		68			13	9.206	822.6		36
37	16'-0			10"							15'-0		14		68			14	9.382	829.5		37
38	16'-4			6"							15'-4		15		72			14	9.558	860.1		38
39	16'-8			8"							15'-8		15		72			14	9.733	867.1		39
40	17'-0			10"							16'-0		15		72			15	9.909	874.0		40
41	17'-4			6"							16'-4		16		76			15	10.084	904.6		41
42	17'-8			8"							16'-8		16		76			15	10.260	911.6		42
43	18'-0			10"							17'-0		16		76			16	10.436	918.5		43
44	18'-4			6"							17'-4		17		80			16	10.611	949.1		44
45	18'-8			8"							17'-8		17		80			16	10.787	956.1		45
46	19'-0			10"							18'-0		17		80			17	10.962	963.0		46
47	19'-4			6"							18-4		18		84			17	11.138	993.6		47
48	19'-8			8"							18-8		18		84			17	11.314	1000.6		48
49	20'-0			10"							19'-0		18		84			18	11.489	1007.5		49
50	20'-4			6"							19'-4		19		88			18	11.665	1038.1		2*
51	20'-8			8"							19'-8		19		88			18	11.840	1045.1		51
52	21'-0			10"							20'-0		19		88			19	12.016	1052.0		52
53	21'-4			6"							20'-4		20		92			19	12.192	1082.6		53
54	21'-8			8"							20'-8		20		92			19	12.367	1089.6		54
55	22'-0			10"							21'-0		20		92			20	12.543	1096.5		55
56	22'-4			6"							21'-4		21		96			20	12.718	1127.1		56
57	22'-8			8"							21'-8		21		96			20	12.894	1134.1		57
58	23'-0			10"							22'-0		21		96			21	13.069	1141.0		58
59	23'-4			6"							22'-4		22		100			21	13.245	1171.6		59
60	23'-8			8"							22'-8		22		100			21	13.421	1178.6		60
61	24'-0			10"							23'-0		22		100			22	13.596	1185.5		61
62	24'-4			6"							23'-4		23		104			22	13.772	1216.1		62
63	24'-8			8"							23'-8		23		104			22	13.947	1223.1		63
64	25'-0	6'-0	8"	10"	42"	54"	18"	5'-0	8'-0	12	24'-0	20	23	5'-8	104	3'-6	4	23	14.123	1230.0	245	64

TABLE "A"			
RCP		CMP	
DIA.	CU. YDS.	DIA.	CU. YDS.
12"	0.037	12"	0.019
15"	0.053	15"	0.030
18"	0.071	18"	0.044
21"	0.095	21"	0.059
24"	0.121	24"	0.078
27"	0.151	30"	0.121
30"	0.184	36"	0.175
33"	0.221	42"	0.238
36"	0.261	48"	0.310
42"	0.350	54"	0.393

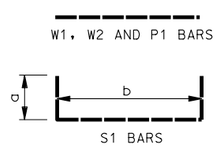

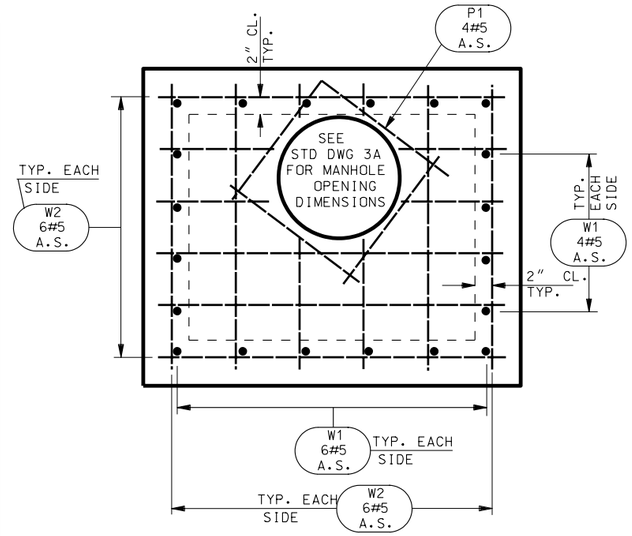

PLAN OF TOP SLAB

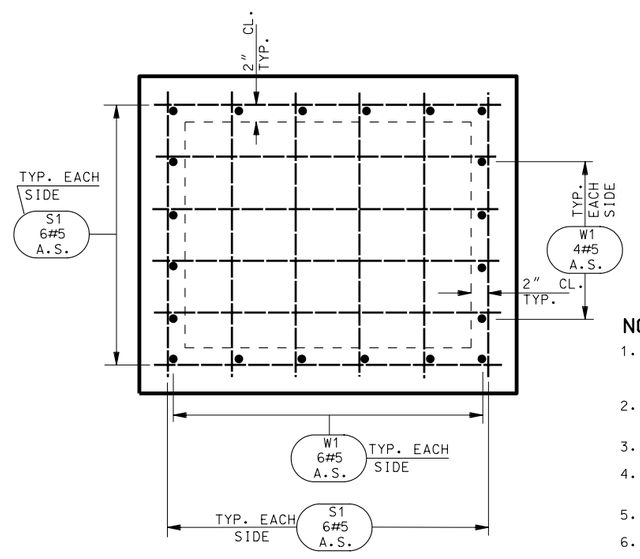

PLAN OF BOTTOM SLAB

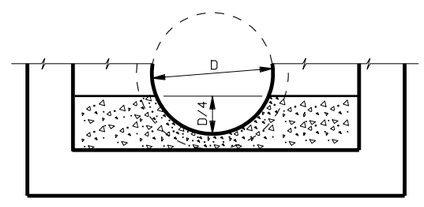

FORMED INVERT DETAIL

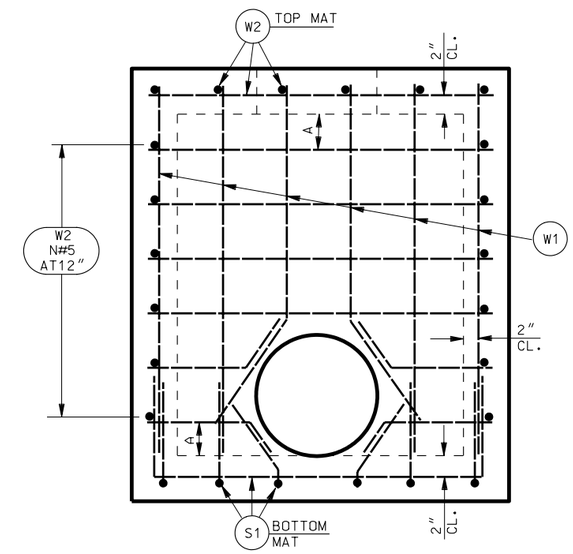

TYPICAL WALL ELEVATION

NOTES:

1. DEDUCT CONCRETE DISPLACED BY PIPE(S) FROM CONCRETE QUANTITIES SHOWN IN SCHEDULE OF INSTALLATION IN ACCORDANCE WITH TABLE "A."
2. FORM THE BOTTOM SLAB OF THE BOX TO FIT THE INVERT OF THE PIPE(S) WHEN SO REQUIRED ACCORDING TO THE DETAIL SHOWN ON THIS SHEET (FORMED INVERT).
3. QUANTITIES SHOWN IN THE SCHEDULE OF INSTALLATION ARE FOR ONE UNIT ONLY.
4. FIELD CUT OR BEND REINFORCING STEEL AS NECESSARY TO CLEAR PIPE(S) AND MAINTAIN 2" MINIMUM CLEARANCE.
5. UNLESS OTHERWISE SHOWN ALL DIMENSIONS ARE OUT-TO-OUT OF BARS.
6. WEIGHT QUANTITIES FOR MANHOLE FRAME AND COVER ARE SHOWN FOR INFORMATION ONLY.
7. SEE STD DWG DB 3A FOR DIMENSIONS. SEE STD DWG GF 6 FOR MANHOLE STEP DETAILS.
8. PIPE DIAMETERS SHOWN IN TABLES AND SCHEDULES ARE INSIDE DIAMETERS.
9. ADD AN ADDITIONAL AMOUNT OF CONCRETE TO QUANTITIES SHOWN IN THE SCHEDULE OF INSTALLATION WHEN FORMED INVERT IS REQUIRED.
10. MAXIMUM PIPE DIMENSIONS SHOWN IN SCHEDULE OF INSTALLATION ARE FOR PIPES PERPENDICULAR TO WALLS OF BOX. DETERMINE CLEARANCES FOR SKEWED PIPES.

NO.	DATE	APPR.	REVISIONS	REMARKS

UTAH DEPARTMENT OF TRANSPORTATION
STANDARD DRAWINGS FOR ROAD AND BRIDGE CONSTRUCTION
SALT LAKE CITY, UTAH

RECOMMENDED FOR APPROVAL — JAN.01.2005 DATE
CHAIRMAN STANDARDS COMMITTEE
APPROVED — JAN.01.2005 DATE
DEPUTY DIRECTOR

STANDARD DIVERSION BOX WITH MANHOLE COVER UP TO 42" RCP AND UP TO 54" CMP

STANDARD DRAWING TITLE

STD DWG
DB 3B

DGN File: N:\Esa\Standard.Drawings\Imperial\2005Approved\Diversion Boxes (DB)\db03b.dgn
15-DEC-2004

SCHEDULE OF INSTALLATION

LINE	DIMENSIONS H	W	T	A	MAX. PIPE DIA. RCP	CMP	REINFORCING STEEL S1 a	b	LGTH	QT	S2 LGTH	QT	W1 LGTH	QT	W2 N	LGTH	QT	P1 LGTH	QT	MAN STEP QT	QUANTITIES CONC. CU.YDS.	REINF. STEEL LBS.	FRAME COVER LBS.	LINE
65	8'-0	9'-0	10"	8"	48"	60"	2-0	8'-8	12'-8	20	2'-0	36	7'-0	72	6	8'-8	108	3'-6	8	5	11.234	1870.4	245	65
66	8'-4	↑	↑	10"	54"	66"	↑	↑	↑	↑		↑	7'-4	↑	6	↑	108	↑	↑	5	11.570	1895.5	↑	66
67	8'-8			6"	60"	72"							7'-8		7		116			6	11.906	1992.8		67
68	9'-0			8"	60"	72"							8'-0		7		116			6	12.242	2017.9		68
69	9'-4			10"	66"	78"							8'-4		7		116			6	12.578	2042.9		69
70	9'-8			6"	66"	84"							8'-8		8		124			7	12.914	2140.2		70
71	10'-0			8"	72"	↑							9'-0		8		124			7	13.250	2165.3		71
72	10'-4			10"	↑								9'-4		8		124			7	13.586	2190.3		72
73	10'-8			6"									9'-8		9		132			8	13.922	2287.6		73
74	11'-0			8"									10'-0		9		132			8	14.258	2312.7		74
75	11'-4			10"									10'-4		9		132			8	14.594	2337.7		75
76	11'-8			6"									10'-8		10		140			9	14.931	2435.1		76
77	12'-0			8"									11'-0		10		140			9	15.266	2460.1		77
78	12'-4			10"									11'-4		10		140			9	15.602	2485.1		78
79	12'-8			6"									11'-8		11		148			10	15.938	2582.5		79
80	13'-0			8"									12'-0		11		148			10	16.274	2607.5		80
81	13'-4			10"									12'-4		11		148			10	16.610	2632.5		81
82	13'-8			6"									12'-8		12		156			11	16.946	2729.9		82
83	14'-0			8"									13'-0		12		156			11	17.282	2754.9		83
84	14'-4			10"									13'-4		12		156			11	17.618	2779.9		84
85	14'-8			6"									13'-8		13		164			12	17.954	2877.3		85
86	15'-0			8"									14'-0		13		164			12	18.290	2902.3		86
87	15'-4			10"									14'-4		13		164			12	18.626	2927.3		87
88	15'-8			6"									14'-8		14		172			13	18.962	3024.7		88
89	16'-0			8"									15'-0		14		172			13	19.298	3049.7		89
90	16'-4			10"									15'-4		14		172			13	19.634	3074.7		90
91	16'-8			6"									15'-8		15		180			14	19.970	3172.1		91
92	17'-0			8"									16'-0		15		180			14	20.306	3197.1		92
93	17'-4			10"									16'-4		15		180			14	20.642	3222.1		93
94	17'-8			6"									16'-8		16		188			15	20.978	3319.5		94
95	18'-0			8"									17'-0		16		188			15	21.314	3344.5		95
96	18'-4			10"									17'-4		16		188			15	21.650	3369.5		96
97	18'-8			6"									17'-8		17		196			16	21.986	3466.9		97
98	19'-0			8"									18'-0		17		196			16	22.322	3491.9		98
99	19'-4			10"									18'-4		17		196			16	22.658	3516.9		99
100	19'-8			6"									18'-8		18		204			17	22.994	3614.3		100
101	20'-0			8"									19'-0		18		204			17	23.330	3639.3		101
102	20'-4			10"									19'-4		18		204			17	23.666	3664.3		102
103	20'-8			6"									19'-8		19		212			18	24.002	3761.7		103
104	21'-0			8"									20'-0		19		212			18	24.338	3786.7		104
105	21'-4			10"									20'-4		19		212			18	24.674	3811.7		105
106	21'-8			6"									20'-8		20		220			19	25.010	3909.1		106
107	22'-0			8"									21'-0		20		220			19	25.346	3934.1		107
108	22'-4			10"									21'-4		20		220			19	25.682	3959.1		108
109	22'-8			6"									21'-8		21		228			20	26.018	4056.5		109
110	23'-0			8"									22'-0		21		228			20	26.354	4081.5		110
111	23'-4			10"									22'-4		21		228			20	26.690	4106.5		111
112	23'-8			6"									22'-8		22		236			21	27.026	4203.9		112
113	24'-0			8"									23'-0		22		236			21	27.362	4228.9		113
114	24'-4			10"									23'-4		22		236			21	27.698	4253.9		114
115	24'-8			6"									23'-8		23		244			22	28.034	4351.3		115
116	25'-0			8"									24'-0		23		244			22	28.370	4376.3		116
117	25'-4			10"									24'-4		23		244			22	28.706	4401.3		117
118	25'-8			6"									24'-8		24		252			23	29.042	4498.7		118
119	26'-0			8"									25'-0		24		252			23	29.378	4523.7		119
120	26'-4			10"									25'-4		24		252			23	29.714	4548.7		120
121	26'-8			6"									25'-8		25		260			24	30.050	4646.1		121
122	27'-0			8"									26'-0		25		260			24	30.386	4671.1		122
123	27'-4			10"									26'-4		25		260			24	30.722	4696.1		123
124	27'-8			6"									26'-8		26		268			25	31.058	4793.5		124
125	28'-0			8"									27'-0		26		268			25	31.394	4818.5		125
126	28'-4			10"									27'-4		26		268			25	31.730	4843.5		126
127	28'-8	↓	↓	6"	↓	↓	↓	↓	↓	↓		↓	27'-8	↓	27		276	↓	↓	26	32.066	4940.9	↓	127
128	29'-0	9'-0	10"	8"	72"	84"	2'-0	8'-8	12'-8	20	2'-0	36	28'-0	72	27	8'-8	276	3'-6	8	26	32.402	4965.9	245	128

TABLE "A"			
RCP		CMP	
DIA.	CU.YDS.	DIA.	CU.YDS.
48"	0.566	60"	0.606
54"	0.711	66"	0.733
60"	0.873	72"	0.873
66"	1.051	78"	1.024
72"	1.245	84"	1.188

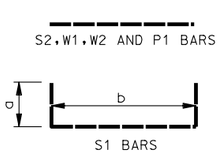

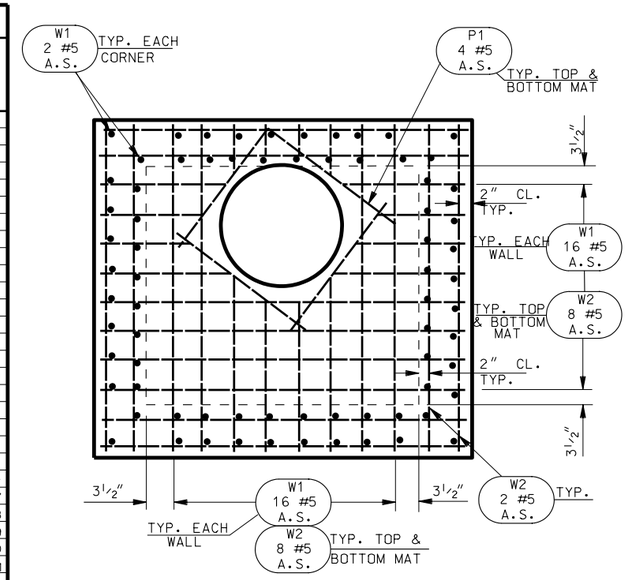

PLAN OF TOP SLAB

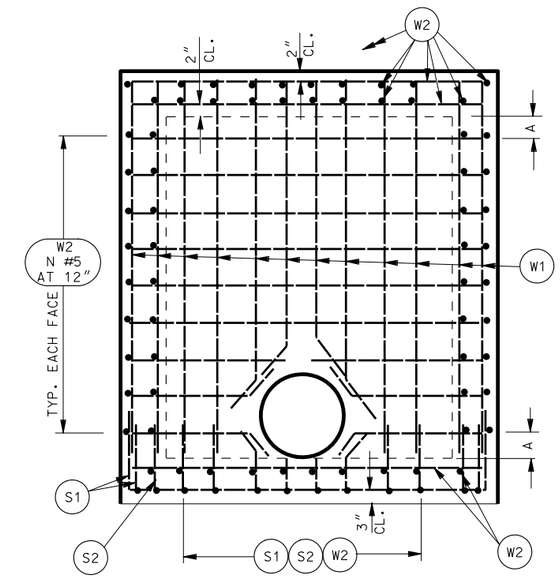

TYPICAL WALL ELEVATION

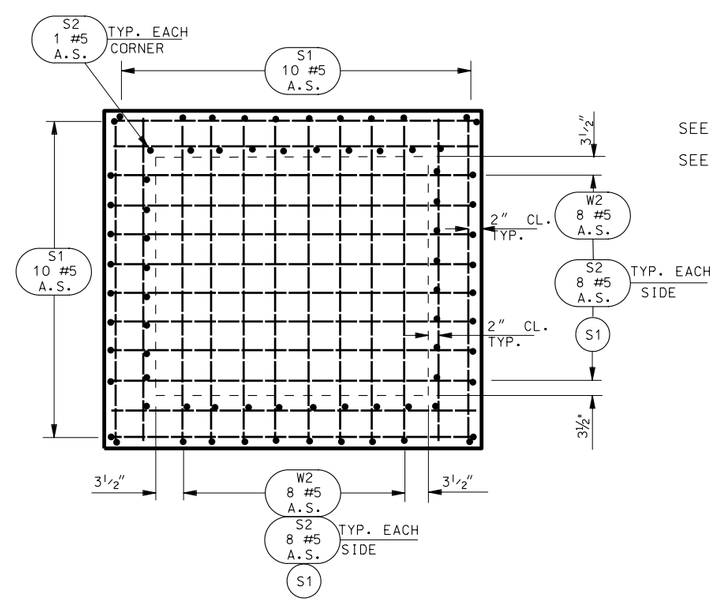

PLAN OF BOTTOM SLAB

SEE STD DWG DB 3A FOR MANHOLE OPENING DIMENSIONS.

SEE STD DWG DB 3B FOR NOTES.

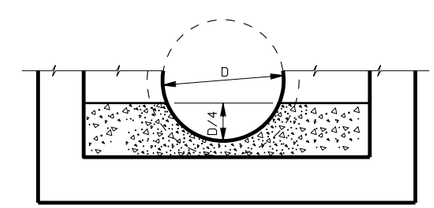

FORMED INVERT DETAIL

NO.	DATE	APPR.	REMARKS

REVISIONS

UTAH DEPARTMENT OF TRANSPORTATION
STANDARD DRAWINGS FOR ROAD AND BRIDGE CONSTRUCTION
SALT LAKE CITY, UTAH

RECOMMENDED FOR APPROVAL — JAN.01,2005 DATE
CHAIRMAN STANDARDS COMMITTEE
APPROVED — JAN.01,2005 DATE
DEPUTY DIRECTOR

STANDARD DIVERSION BOX WITH MANHOLE COVER 48" TO 72" RCP AND 60" TO 84" CMP

STANDARD DRAWING TITLE

STD DWG
DB 3C

DGN File: N:\Esd\Standard Drawings\Imperial\2005Approved\Diversion Boxes (DB)\db03c.dgn
15-DEC-2004

SCHEDULE

LINE	PIPE DIA. (IN.) D	PIPE ARCH (IN.) S	PIPE ARCH (IN.) R	DIVERSION BOX H	DIVERSION BOX A	DIMENSIONS H	DIMENSIONS T	DIMENSIONS M	DIMENSIONS N	DIMENSIONS P	TRANSITION ONE EACH B1 a	B1 b	B1 f	B1 LENGTH	B2 a	B2 b	B2 f	B2 LENGTH	B3 a	B3 b	B3 f	B3 LENGTH	B4 a	B4 b	B4 f	B4 LENGTH	B5 a	B5 b	B5 f	B5 LENGTH	B6 a	B6 b	B6 f	B6 LENGTH	B7 a	B7 b	B7 f	B7 LENGTH	C LENGTH	C NO.BARS	E A	E LENGTH	E NO.BARS	COLLAR A1 LENGTH	A1 NO.BARS	A2 LENGTH	A2 NO.BARS	A3 LENGTH	A3 NO.BARS	A4 LENGTH	A4 NO.BARS	LINE
1	12″	--	--	1′-9	12″	1′-9	4′-0	8″	2′-4	11 3/8″	1′-6	1′-7	93°	4′-8	1′-5	1′-4	101°	4′-1	1′-3	1′-2	111°	3′-7	1′-2	1′-0	126°	3′-2	--	--	--	--	--	--	--	--	--	--	--	--	4′-5	1	3′-10	5′-10	4	2′-0	8	1′-4	8	--	–	2′-8	8	1
2	18″	--	--	2′-3	18″	2′-3	4′-0	1′-0	3′-0	1′-5	1′-11	2′-1	94°	6′-1	1′-9	1′-10	102°	5′-5	1′-6	1′-7	114°	4′-8	1′-3	1′-6	128°	4′-3	--	--	--	--	--	--	--	--	--	--	--	--	4′-5	2	3′-10	5′-10	4	2′-6		1′-10		--	–	3′-2		2
3	24″	--	--	2′-9	24″	2′-9	4′-0	1′-6	4′-0	2′-1 1/2	2′-5	2′-7	94°	7′-7	2′-0	2′-4	104°	6′-8	1′-8	2′-2	115°	6′-0	1′-4	2′-1	128°	5′-6	--	--	--	--	--	--	--	--	--	--	--	--	4′-5	2	3′-10	5′-10	6	3′-0		2′-6		--	–	3′-8		3
4	30″	--	--	3′-3	30″	3′-3	5′-0	1′-10	4′-8	2′-7 1/8	2′-10	3′-1	93°	9′-0	2′-5	2′-10	101°	8′-1	2′-1	2′-8	110°	7′-5	1′-7	2′-7	120°	6′-9	1′-4	2′-7	130°	6′-6	--	--	--	--	--	--	--	--	5′-5	3	4′-10	6′-10	6	3′-6		2′-8		--	–	4′-2		4
5	36″	--	--	3′-9	36″	3′-9	6′-0	2′-3	5′-6	3′-2 1/8	3′-4	3′-7	93°	10′-6	2′-11	3′-4	100°	9′-7	2′-7	3′-2	107°	8′-11	2′-2	3′-2	115°	8′-6	1′-9	3′-1	123°	7′-11	1′-4	3′-2	131°	7′-8	--	--	--	--	6′-5	3	5′-10	7′-10	8	4′-0		2′-10		--	–	4′-8		5
6	42″	--	--	4′-3	42″	4′-3	7′-0	2′-8	6′-4	3′-9 1/4	3′-10	4′-2	93°	12′-2	3′-5	3′-11	98°	11′-3	3′-0	3′-10	105°	10′-8	2′-8	3′-8	111°	10′-0	2′-2	3′-8	118°	9′-6	1′-9	3′-8	125°	9′-1	1′-4	3′-8	132°	8′-8	7′-5	4	6′-10	8′-10	8	4′-6		3′-2		--	–	5′-2		6
7	48″	--	--	4′-9	48″	4′-9	7′-0	3′-2	7′-4	4′-5 3/4	4′-4	4′-8	93°	13′-8	3′-10	4′-5	99°	12′-8	3′-4	4′-4	105°	12′-0	2′-10	4′-3	112°	11′-4	2′-4	4′-3	119°	10′-10	1′-10	4′-3	125°	10′-4	1′-4	4′-4	132°	10′-0	7′-5	4	6′-10	8′-10	10	5′-0		3′-5	8	--	–	5′-8		7
8	--	36″	22″	2′-7	36″	2′-7	4′-0	1′-8	4′-4	2′-4 1/4	3′-3	2′-5	95°	8′-1	2′-8	2′-4	106°	7′-4	2′-1	2′-3	117°	6′-7	1′-5	2′-4	129°	6′-1	--	--	--	--	--	--	--	--	--	--	--	--	4′-5	3	3′-10	5′-10	4	2′-10		3′-0	4	2′-3	4	4′-8		8
9	--	43″	27″	3′-0	43″	3′-0	4′-0	2′-2	5′-4	3′-0 3/4	3′-9	2′-11	95°	9′-7	3′-0	2′-9	107°	8′-6	2′-3	2′-10	119°	7′-11	1′-6	2′-11	130°	7′-4	--	--	--	--	--	--	--	--	--	--	--	--	4′-5	4	3′-10	5′-10	4	3′-3		3′-2		2′-5		5′-3		9
10	--	50″	31″	3′-4	50″	3′-4	5′-0	2′-6	6′-0	3′-6 3/8	4′-4	3′-3	94°	10′-10	3′-8	3′-2	104°	10′-0	2′-11	3′-2	113°	9′-3	2′-3	3′-3	123°	8′-9	1′-6	3′-5	131°	8′-4	--	--	--	--	--	--	--	--	5′-5	5	4′-10	6′-10	6	3′-7		3′-5		2′-5		5′-10		10
11	--	58″	36″	3′-9	58″	3′-9	6′-0	3′-0	7′-0	4′-3	5′-1	3′-8	94°	12′-5	4′-4	3′-8	102°	11′-8	3′-7	3′-8	110°	10′-11	2′-11	3′-9	118°	10′-5	2′-3	3′-11	125°	10′-1	1′-6	4′-1	132°	9′-8	--	--	--	--	6′-5	5	5′-10	7′-10	8	4′-0		3′-6		2′-7		6′-6		11
12	--	65″	40″	4′-1	65″	4′-1	6′-0	3′-4	7′-8	4′-8 1/2	5′-7	4′-0	94°	13′-7	4′-9	3′-11	102°	12′-7	3′-11	4′-0	110°	11′-11	3′-2	4′-1	118°	11′-4	2′-4	4′-4	125°	11′-0	1′-7	4′-7	132°	10′-9	--	--	--	--	6′-5	6	5′-10	7′-10	8	4′-4		4′-0		3′-5		7′-1		12
13	--	72″	44″	4′-5	72″	4′-5	7′-0	3′-9	8′-6	5′-3 5/8	6′-2	4′-4	93°	14′-10	5′-5	4′-4	100°	14′-1	4′-8	4′-4	107°	13′-4	3′-10	4′-5	113°	12′-8	3′-1	4′-7	119°	12′-3	2′-4	4′-9	125°	11′-10	1′-6	5′-0	131°	11′-6	7′-5	6	6′-10	8′-10	10	4′-8	8	4′-0	4	3′-0	4	7′-8	8	13

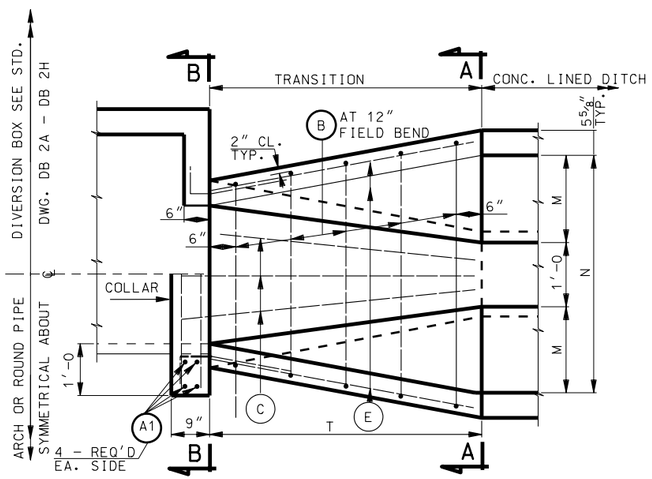

PLAN

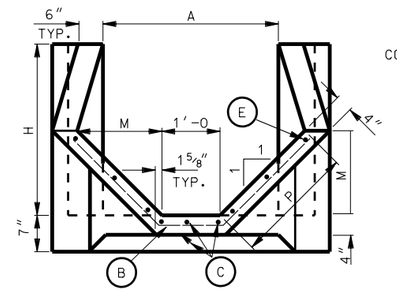

SECTION A-A
(DIVERSION BOX INSTALLATION)

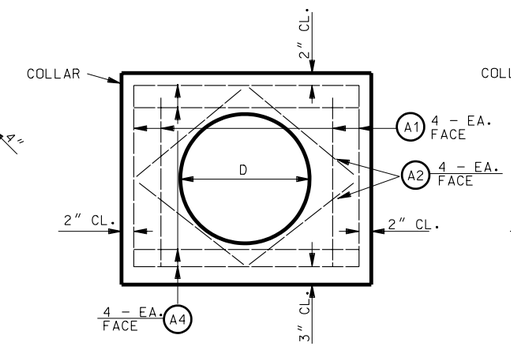

SECTION B-B
(ROUND PIPE INSTALLATION)

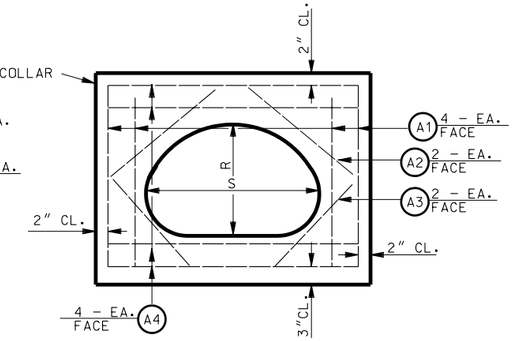

SECTION B-B
(ARCH PIPE INSTALLATION)

DESIGN DATA

HS 20-44 OR INTERSTATE ALTERNATE LOADING IN ACCORDANCE WITH CURRENT AASHTO SPECIFICATIONS AND INTERIM SPECIFICATIONS:

fc = 1,400 psi
fs = 24,000 psi
n = 8

NOTES:

1. USE COATED DEFORMED BILLET REINFORCING STEEL BARS CONFORMING TO AASHTO M 284 OR M 111 AND M 31 GRADE 60.
2. TYPE II CEMENT (LOW ALKALI) REQUIRED.
3. DEDUCT CONCRETE DISPLACED BY PIPE FROM THOSE CONCRETE QUANTITIES GIVEN IN SCHEDULE.
4. ADJUST CONCRETE QUANTITIES ACCORDINGLY IF PIPE SIZES OTHER THAN SHOWN ARE USED OR IF PIPES ARE SKEWED.
5. USE #4 REINFORCING STEEL SPACED EQUALLY AT 12″±.

QUANTITIES

(SEE SCHEDULE)

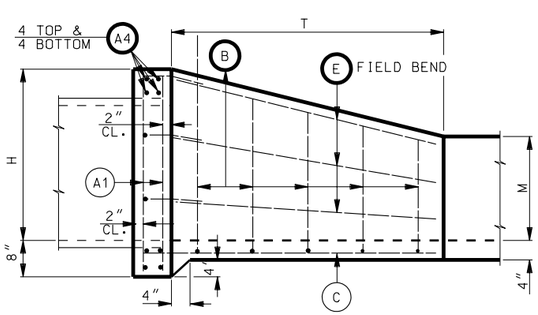

ELEVATION

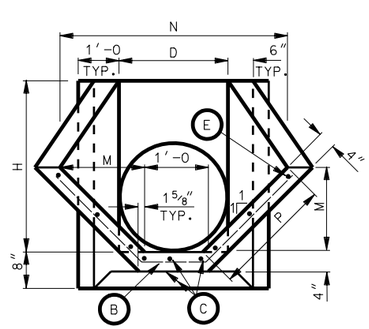

SECTION A-A
(ROUND PIPE INSTALLATION)

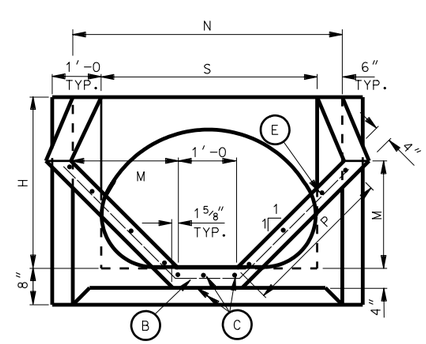

SECTION A-A
(ARCH PIPE INSTALLATION)

QUANTITIES				
LINE	REINF. STEEL TRANSITION Lb.	REINF. STEEL COLLAR Lb.	CONCRETE TRANSITION Cu.Yd.	CONCRETE COLLAR Cu.Yd.
1	29	32.1	0.2614	0.2014
2	35	40.1	0.3351	0.2836
3	47	49.1	0.4219	0.3796
4	64	55.2	0.6174	0.4896
5	90	61.5	0.8587	0.6134
6	115	69.6	1.1392	0.7511
7	133	75.3	1.2887	0.9028
8	43	54.0	0.4503	0.4514
9	50	60.3	0.5325	0.5687
10	77	66.9	0.7429	0.6852
11	107	72.4	1.0151	0.8383
12	115	81.8	1.1100	0.9786
13	150	85.6	1.4140	1.1296

REVISIONS

NO.	DATE	APPR.	REMARKS

UTAH DEPARTMENT OF TRANSPORTATION
STANDARD DRAWINGS FOR ROAD AND BRIDGE CONSTRUCTION
SALT LAKE CITY, UTAH

RECOMMENDED FOR APPROVAL — JAN.01,2005 DATE
CHAIRMAN STANDARDS COMMITTEE
APPROVED — JAN.01,2005 DATE
DEPUTY DIRECTOR

STANDARD TRANSITION CONCRETE LINED DITCH TO PIPE OR DIVERSION BOX

STANDARD DRAWING TITLE

STD DWG
DB 4

DGN File: N:\Eng\Standards\Drawings\Imperial\2005Approved\Diversion Boxes (DB)\db04.dgn
15-DEC-2004

2005 STANDARD DRAWINGS

END OF DRAWING BOOK PART 2