2005 STANDARD DRAWINGS

http://www.udot.utah.gov/index.php/m=c/tid=1091

Change 4, September 12, 2005

Memorandum UTAH DEPARTMENT OF TRANSPORTATION

DATE: September 12, 2005

TO: Region Directors
Project Engineers
Project Design Engineers
Project Managers
Consultants and Contractors

FROM: Barry Axelrod, CDT
Standards and Specifications

SUBJECT: 2005 Standard Drawings [U.S. Standard Unit (Inch-Pound Units)] Change 4, Dated September 12, 2005

A new index and updated drawings are attached. Please take the following action with respect to the attached pages.

REMOVE	INSERT
Cover	Cover - revised for Change Four
N/A	Memo - Insert after cover
Index	Index - revised
Listing	Listing of Revised Standard Drawings, With Changes 1, 2, 3, & 4
Sheet 1B	Sheet 1B - revised
Sheet 1C	Sheet 1C - revised
BA 1B	BA 1B- revised
BA 3B	BA 3B- revised
BA 4B	BA 4B- revised
None	CC 7B - new
DG 1	DG 1 - revised
EN 1	EN 1 - revised
EN 2	EN 2 - revised
EN 3	EN 3 - revised
EN 4	EN 4 - revised
EN 5	EN 5 - revised
None	EN 6 - new
None	EN 7 - new
SL 14	SL 14 - revised
SL 15	SL 15 - revised
SN 12A	SN 12A - revised

Electronic files for all Standards Drawings are available on the Internet from the “2005 Standards” Web page, under “2005 Standard Drawings.” Individual files are available in two locations. For Microstation DGN format files download individual files from the “2005 Individual Standard Drawings (DGN)” link. For Adobe PDF format files download individual

and series files from the “2005 Individual Standard Drawings (PDF)” link. The Series files are zipped in an EXE file. The entire set of drawings is available in Adobe pdf format in six files from the same area as the “2005 Current Drawings” link. The following page shows a break down of the six parts and the drawing series included in each part.

Any changes made to a digitally signed UDOT Standard Drawing Microstation DGN files automatically invalids the digital signatures.

If you have any questions or problems with the electronic files contact me at 801-964-4570 or by email at baxelrod@utah.gov.

Because of file size the 2005 Standard Drawings have been split into six files. The contents of each part are listed below.

Part 1 (Updated as part of Change 1, 2, 3, and 4)
Index
Sheets 1B and 1C
AT Series Drawings
BA Series Drawings

Part 2 (Updated as part of Change 1, 2, 3, and 4)
CB Series Drawings
CC Series Drawings
DB Series Drawings

Part 3 (Updated as part of Change 1, 2, and 4)
DD Series Drawings
DG Series Drawings
EN Series Drawings

Part 4 (Updated as part of Change 1, 2, and 3)
FG Series Drawings
GF Series Drawings
GW Series Drawings

Part 5 (Updated as part of Change 2 and 4)
PV Series Drawings
SL Series Drawings
SN Series Drawings

Part 6 (Updated as part of Change 1)
ST Series Drawings
SW Series Drawings
TC Series Drawings

STANDARD DRAWINGS INDEX (Change 4, Dated 09/12/05)
UTAH DEPARTMENT OF TRANSPORTATION

X	NUMBER	TITLE	CURRENT DATE
		Advanced Traffic Management System (AT)	
___	AT 1	Legend Sheet	02/24/05
___	AT 2	Ramp Meter Details	02/24/05
___	AT 3	Ramp Meter Sign Panel	02/24/05
___	AT 4	Typical Ramp Meter Signal Head Mounting	04/28/05
___	AT 5	Ramp Meter Loop Installation	02/24/05
___	AT 6	Conduit Details	02/24/05
___	AT 7	Polymer-Concrete Junction Box Details	02/24/05
___	AT 8	ATMS Cabinet	02/24/05
___	AT 9	ATMS Cabinet Disconnect And Transformer Frame	02/24/05
___	AT 10	CCTV Mounting Details	02/24/05
___	AT 11	CCTV Pole Details	02/24/05
___	AT 12	CCTV Pole Foundation For Dedicated CCTV Pole	02/24/05
___	AT 13	Not Used	
___	AT 14	Weigh In Motion Piezo Details	02/24/05
___	AT 15	RWIS Site And Foundation Details	02/24/05
___	AT 16	RWIS Tower Base And Service Pad Layout	02/24/05
___	AT 17	Ground Rod Installation And Tower Grounding	02/24/05
___	AT 18	TMS Detection Zone Layout	02/24/05
		Barriers (BA)	
___	BA 1A	Precast Concrete Full Barrier Standard Section	01/01/05
___	BA 1B	Precast Concrete Full Barrier Standard Section	**08/25/05**
___	BA 1C	Precast Concrete Barrier Terminal For Speed ≤ 40 MPH	01/01/05
___	BA 1D	Precast Concrete Full Section Median Installation	01/01/05
___	BA 1E	Precast Concrete Full Section Shoulder Applications	01/01/05
___	BA 2	Precast Concrete Half Barrier Standard Section	01/01/05
___	BA 3A	Cast In Place Constant Slope Barrier	02/24/05
___	BA 3B	Precast Concrete Constant Slope Transition Section For Crash Cushion And W-Beam Guardrail	**08/25/05**
___	BA 4A	W-Beam Guardrail Hardware	01/01/05
___	BA 4B	W-Beam Guardrail Transition	**08/25/05**
___	BA 4C	W-Beam Guardrail Transition Curb Section	02/24/05
___	BA 4D	W-Beam Guardrail Anchor Type I	01/01/05
___	BA 4E	W-Beam Guardrail Installations	01/01/05
___	BA 4F	W-Beam Guardrail Typicals Divided Roadways	01/01/05
___	BA 4G	W-Beam Guardrail Typical Multilane Arterial	01/01/05
___	BA 4H	W-Beam Guardrail Typical 2 Lane 2 Way	01/01/05
___	BA 4I	W-Beam Guardrail Buried In Backslope Terminal	01/01/05
___	BA 4J	W-Beam Guardrail Buried In Backslope Terminal With Rub Rail	01/01/05
___	BA 4K	W-Beam Guardrail Buried In Backslope Terminal Anchor	01/01/05
___	BA 4L	W-Beam Guardrail Curve Details	01/01/05

___	BA 4M	W-Beam Guardrail Nested Guardrail 12’ 6” Span	01/01/05
___	BA 4N	W-Beam Guardrail Nested Guardrail 18’ 9” Span	01/01/05
___	BA 4O	W-Beam Guardrail Nested Guardrail 25’ Span	01/01/05
___	BA 4P	W-Beam Guardrail With Precast Barrier For Span > 25’	01/01/05

Catch Basins And Cleanouts (CB)

___	CB 1	Curb and Gutter Inlet	04/28/05
___	CB 2	Open Curb Inlet	04/28/05
___	CB 3	Shallow Catch Basin	04/28/05
___	CB 4	Open Curb Shallow Catch Basin	01/01/05
___	CB 5A	Standard Catch Basin and Cleanout Box	06/30/05
___	CB 5B	Standard Catch Basin and Cleanout Box Section	01/01/05
___	CB 6A	Drop Inlet Type “A”	01/01/05
___	CB 6B	Berm Apron With Drop Inlet Type “A”	01/01/05
___	CB 7A	Drop Inlet Type “B”	01/01/05
___	CB 7B	Normal Apron With Drop Inlet Type “B”	01/01/05
___	CB 8A	Double Catch Basin	01/01/05
___	CB 8B	Double Catch Basin	01/01/05
___	CB 9A	Standard Catch Basin And Cleanout Box Situation And Layout	01/01/05
___	CB 9B	Standard Catch Basin And Cleanout Box Section Details	01/01/05
___	CB 9C	Standard Catch Basin And Cleanout Box Schedule Of Installation 18” to 42” RCP 12” to 48” CMP	01/01/05
___	CB 9D	Standard Catch Basin And Cleanout Box Schedule Of Installation 48” to 66” RCP 60” to 78” CMP	01/01/05
___	CB 10A	Standard Catch Basin And Cleanout Box Situation And Layout	01/01/05
___	CB 10B	Standard Catch Basin And Cleanout Box Section Details	01/01/05
___	CB 10C	Standard Catch Basin And Cleanout Box Schedule Of Installation 42” to 60” RCP 48” to 72” CMP	01/01/05
___	CB 11	Standard Manhole	01/01/05

Crash Cushions (CC)

___	CC 1	Crash Cushion Markings	01/01/05
___	CC 2	Crash Cushion Drainage Details Guideline A	01/01/05
___	CC 3	Crash Cushion Drainage Details Guideline B	01/01/05
___	CC 4	Details For Placement Crash Cushions Type A, B, And D	01/01/05
___	CC 5	Grading And Placement Details Crash Cushion Type C	01/01/05
___	CC 6	Crash Cushion Type E Sand Barrel Details	01/01/05
___	CC 7A	Grading And Installation Details Crash Cushion Type F Quad Trend 350	02/24/05
___	CC 7B	Crash Cushion Type F BEAT-SSCC	**08/25/05**
___	CC 8A	Grading And Installation Details Crash Cushion Type G	04/28/05
___	CC 8B	Grading And Installation Details For “3R” Projects Crash Cushion Type G	04/28/05
___	CC 9A	Grading And Installation Details Crash Cushion Type H	04/28/05
___	CC 9B	Grading And Installation Details Crash Cushion Type H (Parabolic Flare)	04/28/05

Diversion Boxes (DB)

___	DB 1A	Standard Diversion Box/Cover Plate/Grating For 18” DIA. or 24” DIA. Pipe	01/01/05
___	DB 1B	Standard Diversion Box Hinged Lid Details For 18” DIA. or 24” DIA. Pipe	01/01/05
___	DB 1C	Standard Diversion Box Bicycle - Safe Grating Details For 18” DIA. or 24” DIA. Pipe	01/01/05
___	DB 1D	Standard Diversion Box Three Gate Box Sections For 18” DIA. or 24” DIA. Pipe	01/01/05
___	DB 1E	Standard Diversion Box Three Gate Box Sections For 18” DIA. or 24” DIA. Pipe	01/01/05
___	DB 1F	Standard Diversion Box Three Gate Box Sections For 18” DIA. or 24” DIA. Pipe	01/01/05
___	DB 2A	Standard Diversion Box w/Interchangeable Walls, Bottom Slab, Walls And Apron Details	01/01/05
___	DB 2B	Standard Diversion Box w/Interchangeable Walls, Quantities Schedule	01/01/05
___	DB 2C	Standard Diversion Box w/Interchangeable Walls, Hand Slide Gate Details	01/01/05
___	DB 2D	Standard Diversion Box Type “G” Hand Slide Gate Details	01/01/05
___	DB 2E	Standard Diversion Box Hinged Lid (Solid Cover Plate) Type “A” Details Type I Plan	01/01/05
___	DB 2F	Standard Diversion Box Hinged Lid (Solid Cover Plate) Type “A” Details Type II Plan	01/01/05
___	DB 2G	Standard Diversion Box Hinged Lid Solid Cover Type “B” Details	01/01/05
___	DB 2H	Standard Diversion Box Hinged Lid Solid Cover Type “B” And “C” Details	01/01/05
___	DB 3A	Standard Diversion Box With Manhole Cover Situation And Layout	01/01/05
___	DB 3B	Standard Diversion Box With Manhole Cover Up To 42” RCP And Up To 54” CMP	01/01/05
___	DB 3C	Standard Diversion Box With Manhole Cover 48” to 72” RCP And 60” to 84” CMP	01/01/05
___	DB 4	Standard Transition Concrete Lined Ditch To Pipe Or Diversion Box	01/01/05

Design Drawings (DD)

___	DD 1	Superelevation And Widening	01/01/05
___	DD 2	Surface Ditch, Benched Slope, And Cut Ditch Details	01/01/05
___	DD 3	Climbing Lanes	01/01/05
___	DD 4	Geometric Design for Freeways (Roadway)	04/28/05
___	DD 5	Entrance And Exit Ramps At Crossroads	01/01/05
___	DD 6	Entrance And Exit Ramp Geometrics	01/01/05
___	DD 7	Freeway Crossover	01/01/05
___	DD 8	Structural Geometric Design Standards For Clearances	01/01/05
___	DD 9	Structural Geometric Design Standards	01/01/05
___	DD 10	Railroad Clearances At Highway Overpass Structures	01/01/05

___	DD 11	Rural Multi Lane Highways Other Than Freeways	01/01/05
___	DD 12	Rural Two Lane Highways	01/01/05
___	DD 13	Frontage And Access Roads (Under 50 ADT)	01/01/05
___	DD 14	Typical Rural 2 Lane Road With Median Lane And Deceleration Lane For Intersecting Crossroads	01/01/05

Drainage (DG)

___	DG 1	Fill Height for Metal Pipe (Steel)	**08/25/05**
___	DG 2	Fill Height for Metal Pipe (Aluminum)	01/01/05
___	DG 3	Maximum Fill Height For HDPE And PVC Pipes	01/01/05
___	DG 4	Pipe Minimum Cover	01/01/05
___	DG 5	Plastic Pipe, Metal Pipe Or Pipe Arch Culvert Bedding	01/01/05
___	DG 6	Precast Concrete Pipe Culvert	01/01/05
___	DG 7	Gasketted Joints Or Coupling Bands For CMP	01/01/05
___	DG 8	Metal Culvert End Section	01/01/05
___	DG 9	Miscellaneous Pipe Details	01/01/05

Environmental Controls (EN)

___	EN 1	Temporary Erosion Control (Check Dams)	**08/25/05**
___	EN 2	Temporary Erosion Control (Silt Fence)	**08/25/05**
___	EN 3	Temporary Erosion Control (Slope Drain And Temporary Berm)	**08/25/05**
___	EN 4	Temporary Erosion Control (Drop Inlet Barriers)	**08/25/05**
___	EN 5	Temporary Erosion Control (Pipe Inlet And Curb Inlet Barriers)	**08/25/05**
___	EN 6	Temporary Erosion Control (Sediment Trap and Stabilized Construction Entrance)	**08/25/05**
___	EN 7	Temporary Erosion Control (Straw Bale Barrier)	**08/25/05**

Fence And Gates (FG)

___	FG 1A	Right Of Way Fence And Gates (Wood Post)	01/01/05
___	FG 1B	Right Of Way Fence And Gates (Wood Post)	01/01/05
___	FG 2A	Right Of Way Fence And Gates (Metal Post)	01/01/05
___	FG 2B	Right Of Way Fence And Gates (Metal Post)	01/01/05
___	FG 3	Swing Gates Type I For Gates Less Than 17’	02/24/05
___	FG 4A	Deer Crossing Details	04/28/05
___	FG 4B	Deer Ramp Details	04/28/05
___	FG 5	Swing Gates Type II For Gates Wider Than 17’	01/01/05
___	FG 6	Chain Link Fence	01/01/05

Grates, Frames, And Trash Racks (GF)

___	GF 1	Manhole Frame And Grated Cover	01/01/05
___	GF 2	Manhole Frame And Solid Cover	01/01/05
___	GF 3	Rectangular Grate And Frame	01/01/05
___	GF 4	Directional Flow Grate And Frame	01/01/05
___	GF 5	Solid Cover And Frame	01/01/05
___	GF 6	Manhole Steps	01/01/05
___	GF 7	Standard Screw Gate And Frame	01/01/05

___	GF 8	2’ x 2’ Grate And Frame	01/01/05
___	GF 9	28” x 24” Directional Flow Grate And Frame	01/01/05
___	GF 10	Standard Trash Racks 90 ° X-ing Angle	01/01/05
___	GF 11	Standard Trash Racks	01/01/05
___	GF 12	Standard Trash Racks	01/01/05
___	GF 13	Open Curb Inlet Grate and Frame	01/01/05
___	GF 14	Solid Cover For Std Dwg DB 1 MS-18 Loading	01/01/05
___	GF 15	Standard Screw Gate And Frame	01/01/05

General Road Work (GW)

___	GW 1	Raised Median And Plowable End Section	01/01/05
___	GW 2	Concrete Curb And Gutter	01/01/05
___	GW 3	Concrete Curb And Gutter Details	01/01/05
___	GW 4	Concrete Driveways And Sidewalks	01/01/05
___	GW 5A	Pedestrian Access	06/30/05
___	GW 5B	Pedestrian Access	06/30/05
___	GW 5C	Pedestrian Access	06/30/05
___	GW 6	Right Of Way Marker	01/01/05
___	GW 7	Newspaper And Mailbox Stop Layout	01/01/05
___	GW 8	Newspaper And Mailbox Support Hardware	01/01/05
___	GW 9	Delineation Hardware	01/01/05
___	GW 10	Delineation Application	01/01/05
___	GW 11	Sidewalks And Shoulders On Urban Roadways	01/01/05

Paving (PV)

___	PV 1	Joints For Highways With Concrete Traffic Lanes And Shoulders	01/01/05
___	PV 2	Pavement/Approach Slab Details	01/01/05
___	PV 3	Concrete Pavement Details For Urban And Interstate	01/01/05
___	PV 4	Concrete Pavement Details For Urban And Interstate	01/01/05
___	PV 5	Urban Concrete Pavement Details	01/01/05
___	PV 6	Rumble Strips	01/01/05
___	PV 7	Rumble Strips - Typical Application	01/01/05
___	PV 8	Note Used	
___	PV 9	Dowel Bar Retrofit	01/01/05

Signals (SL)

___	SL 1A	Traffic Signal Mast Arm Pole And Luminaire Extension	01/01/05
___	SL 1B	Traffic Signal Mast Arm Pole And Luminaire Extension	01/01/05
___	SL 2	Traffic Signal Mast Arm Details 30’ Thru 75’	01/01/05
___	SL 3	Underground Service Pedestal Details	01/01/05
___	SL 4	Traffic Signal Mast Arm Pole Foundation	01/01/05
___	SL 5	Traffic Signal Pole	01/01/05
___	SL 6	Pole Mounted Power Source Details	01/01/05
___	SL 7	Span Wire Signal Pole Details	01/01/05
___	SL 8	Signal Head Details	01/01/05
___	SL 9	Pedestrian Signal Assembly	01/01/05

___	SL 10	Traffic Signal Controller Base Details	01/01/05
___	SL 11	Traffic Signal Loop Detector Details	01/01/05
___	SL 12	Traffic Counting Loop Detector Details	04/28/05
___	SL 13	Video Detection Camera Mount	04/28/05
___	SL 14	Highway Luminaire Pole Ground Mount	**08/25/05**
___	SL 15	Luminaire Slip Base Details	**08/25/05**
___	SL 16	Highway Luminaire Pole Barrier Mount	01/01/05
___	SL 17	Highway Luminaire Pole Foundation Extension	01/01/05
___	SL 18	Single Transformer Substation Details	01/01/05

Signs (SN)

___	SN 1	Bridge Load Limits Signs	01/01/05
___	SN 2	School Speed Limit Assembly	01/01/05
___	SN 3	Overhead School Speed Limit Assembly	01/01/05
___	SN 4	Flashing Stop Sign	01/01/05
___	SN 5	Typical Installation For Milepost Signs	01/01/05
___	SN 6	Speed Reduction Sign Sequence	01/01/05
___	SN 7	Placement of Ground Mounted Signs	01/01/05
___	SN 8	Ground Mounted Timber Sign Post (P1)	04/28/05
___	SN 9	Ground Mounted Tubular Steel Sign Post (P2)	01/01/05
___	SN 10	Ground Mounted Square Steel Sign Post (P3)	01/01/05
___	SN 11	Slipbase Ground Mounted Tubular Steel Sign Post (P4)	04/28/05
___	SN 12A	Ground Mounted Sign Installation Details	**08/25/05**
___	SN 12B	Ground Mounted Sign Installation Details	01/01/05
___	SN 12C	Ground Mounted Sign Installation Details	01/01/05

Striping (ST)

___	ST 1	Object Markers “T” Intersection And Pavement Transition Guidance	01/01/05
___	ST 2	Freeway Crossover Markings	01/01/05
___	ST 3	Typical Pavement Markings	01/01/05
___	ST 4	Crosswalks, Parking And Intersection Approaches	01/01/05
___	ST 5	Painted Median And Auxiliary Lane Details	02/24/05
___	ST 6	Passing/Climbing Lanes Traffic Control	01/01/05
___	ST 7	Pavement Markings And Signs At Railroad Crossing	01/01/05
___	ST 8	Plowable Pavement Markers	01/01/05
___	ST 9	School Crossing And School Message	01/01/05

Structures And Walls (SW)

___	SW 1A	Welded End Guard Unit	01/01/05
___	SW 1B	Precast Concrete Cattle Guard	01/01/05
___	SW 2	Noise Wall Placement Area	01/01/05
___	SW 3A	Precast Concrete Noise Wall 1 Of 2	01/01/05
___	SW 3B	Precast Concrete Noise Wall 2 Of 2	01/01/05
___	SW 4A	Precast Concrete Retaining/Noise Wall 1 Of 2	01/01/05
___	SW 4B	Precast Concrete Retaining/Noise Wall 2 Of 2	01/01/05

Traffic Control (TC)

___	TC 1A	Construction Zone Channelization Devices	01/01/05
___	TC 1B	Construction Zone Signing	01/01/05
___	TC 2A	Traffic Control General	01/01/05
___	TC 2B	Traffic Control General	01/01/05
___	TC 3	Traffic Control Project Limit Signing	01/01/05
___	TC 4	Traffic Control Urban Intersections With Roadways Under 50 MPH	01/01/05
___	TC 5	Traffic Control Urban Intersections With Roadways Under 50 MPH	01/01/05
___	TC 6	Traffic Control Pedestrian Routing	01/01/05
___	TC 7	Traffic Control Road Closed, Detour	01/01/05
___	TC 8	Traffic Control Lane Closure	01/01/05
___	TC 9	Traffic Control Multilane Closure	01/01/05
___	TC 10	Traffic Control Expressway And Freeway Crossover/Turn Around	01/01/05
___	TC 11	Traffic Control Exit Ramp Gore	01/01/05
___	TC 12	Traffic Control Entrance Ramp Gore	01/01/05
___	TC 13	Traffic Control Shoulder-Haul Road	01/01/05
___	TC 14	Traffic Control Flagging Operation	01/01/05
___	TC 15	Traffic Control 2 Lane/2 Way Seal Coat With Cover Material	01/01/05
___	TC 16	Traffic Control Pavement Marking	01/01/05

Listing of Revised Standard Drawings

Change One

Revised February 24, 2005

AT 1	Legend Sheet	02/24/2005
AT 2	Ramp Meter Details	02/24/2005
AT 3	Ramp Meter Sign Panel	02/24/2005
AT 5	Ramp Meter Loop Installation	02/24/2005
AT 6	Conduit Details	02/24/2005
AT 7	Polymer-Concrete Junction Box Details	02/24/2005
AT 8	ATMS Cabinet	02/24/2005
AT 9	ATMS Cabinet Disconnect And Transformer Frame	02/24/2005
AT 10	CCTV Mounting Details	02/24/2005
AT 11	CCTV Pole Details	02/24/2005
AT 12	CCTV Pole Foundation For Dedicated CCTV Pole	02/24/2005
AT 13	Deleted	N/A
AT 14	Weigh In Motion Piezo Details	02/24/2005
AT 15	RWIS Site And Foundation Details	02/24/2005
AT 16	RWIS Tower Base And Service Pad Layout	02/24/2005
AT 17	Ground Rod Installation And Tower Grounding	02/24/2005
AT 18	TMS Detection Zone Layout	02/24/2005
BA 3	Deleted	N/A
BA 3A	Cast In Place Constant Slope Barrier	02/24/2005
BA 3B	Precast Concrete Constant Slope Transition Section For Crash Cushion And W-Beam Guardrail	02/24/2005
BA 4B	W-Beam Guardrail Transition	02/24/2005
BA 4C	W-Beam Guardrail Transition Curb Section	02/24/2005
CC 7	Deleted	N/A
CC 7A	Grading And Installation Details Crash Cushion Type F Quad Trend 350	02/24/2005
CC 7B	Reserved For Future Use	N/A
CC 8	Deleted	N/A
CC 8A	Grading And Installation Details Crash Cushion Type G	02/24/2005
CC 8B	Grading And Installation Details For “3R” Projects Crash Cushion Type G	02/24/2005
CC 9A	Grading And Installation Details Crash Cushion Type H	02/24/2005
CC 9B	Grading And Installation Details Crash Cushion Type H (Parabolic Flare)	02/24/2005
DD 4	Geometric Design for Freeways (Roadway)	02/24/2005
FG 3	Swing Gates Type I For Gates Less Than 17’	02/24/2005
ST 5	Painted Median And Auxiliary Lane Details	02/24/2005

Change Two

Revised April 28, 2005

AT 4	Typical Ramp Meter Signal Head Mounting	04/28/2005
CB 1	Curb and Gutter Inlet	04/28/2005
CB 2	Open Curb Inlet	04/28/2005
CB 3	Shallow Catch Basin	04/28/2005
CC 8A	Grading And Installation Details Crash Cushion Type G	04/28/2005
CC 8B	Grading And Installation Details For “3R” Projects Crash Cushion Type G	04/28/2005
CC 9A	Grading And Installation Details Crash Cushion Type H	04/28/2005
CC 9B	Grading And Installation Details Crash Cushion Type H (Parabolic Flare)	04/28/2005
DD 4	Geometric Design for Freeways (Roadway)	04/28/2005
FG 4	Deleted	N/A
FG 4A	Deer Crossing Details	04/28/2005
FG 4B	Deer Ramp Details	04/28/2005
SL 12	Traffic Counting Loop Detector Details	04/28/2005
SL 13	Video Detection Camera Mount	04/28/2005
SN 8	Ground Mounted Timber Sign Post (P1)	04/28/2005
SN 11	Slipbase Ground Mounted Tubular Steel Sign Post (P4)	04/28/2005

Change Three

Revised June 30, 2005

CB 5A	Standard Catch Basin and Cleanout Box	06/30/2005
GW 5A	Pedestrian Access	06/30/2005
GW 5B	Pedestrian Access	06/30/2005
GW 5C	Pedestrian Access	06/30/2005

Change Four

Revised August 25, 2005

BA 1B	Precast Concrete Full Barrier Standard Section	08/25/2005
BA 3B	Precast Concrete Constant Slope Transition Section	08/25/0205
	For Crash Cushion And W-Beam Guardrail	08/25/0205
BA 4B	W-Beam Guardrail Transition	08/25/2005
CC 7B	Crash Cushion Type F BEAT-SSCC	08/25/2005
DG 1	Fill Height for Metal Pipe (Steel)	08/25/2005
EN 1	Temporary Erosion Control (Check Dams)	08/25/2005
EN 2	Temporary Erosion Control (Silt Fence)	08/25/2005
EN 3	Temporary Erosion Control (Slope Drain And Temporary Berm)	08/25/2005
EN 4	Temporary Erosion Control (Drop Inlet Barriers)	08/25/2005
EN 5	Temporary Erosion Control (Pipe Inlet And Curb Inlet Barriers)	08/25/2005
EN 6	Temporary Erosion Control (Sediment Trap and Stabilized Construction Entrance)	
EN 7	Temporary Erosion Control (Straw Bale Barrier)	08/25/2005
SL 14	Highway Luminaire Pole Ground Mount	08/25/2005
SL 15	Luminaire Slip Base Details	08/25/2005
SN 12A	Ground Mounted Sign Installation Details	08/25/2005

UTAH DEPARTMENT OF TRANSPORTATION

STANDARD DRAWINGS FOR ROAD AND BRIDGE CONSTRUCTION

	DWG. NO.	DESCRIPTION	DATE
		Advanced Traffic Management System (AT)	
	AT 1	LEGEND SHEET	02-24-05
	AT 2	RAMP METER DETAILS	02-24-05
	AT 3	RAMP METER SIGN PANEL	02-24-05
	AT 4	TYPICAL RAMP METER SIGNAL HEAD MOUNTING	04-28-05
	AT 5	RAMP METER LOOP INSTALLATION	02-24-05
	AT 6	CONDUIT DETAILS	02-24-05
	AT 7	POLYMER-CONCRETE JUNCTION BOX DETAILS	02-24-05
	AT 8	ATMS CABINET	02-24-05
	AT 9	ATMS CABINET DISCONNECT AND TRANSFORMER FRAME	02-24-05
	AT 10	CCTV MOUNTING DETAILS	02-24-05
	AT 11	CCTV POLE DETAILS	02-24-05
	AT 12	CCTV POLE FOUNDATION FOR DEDICATED CCTV POLE	02-24-05
	AT 13	NOT USED	
	AT 14	WEIGHT IN MOTION PIEZO DETAILS	02-24-05
	AT 15	RWIS SITE AND FOUNDATION DETAILS	02-24-05
	AT 16	RWIS TOWER BASE AND SERVICE PAD LAYOUT	02-24-05
	AT 17	GROUND ROD INSTALLATION AND TOWER GROUNDING	02-24-05
	AT 18	TMS DETECTION ZONE LAYOUT	02-24-05
		Barriers (BA)	
	BA 1A	PRECAST CONCRETE FULL BARRIER STANDARD SECTION	01-01-05
	BA 1B	PRECAST CONCRETE FULL BARRIER STANDARD SECTION	08-25-05
	BA 1C	PRECAST CONCRETE BARRIER TERMINAL FOR SPEED ≤40 MPH	01-01-05
	BA 1D	PRECAST CONCRETE FULL SECTION MEDIAN INSTALLATION	01-01-05
	BA 1E	PRECAST CONCRETE FULL SECTION SHOULDER APPLICATIONS	01-01-05
	BA 2	PRECAST CONCRETE HALF BARRIER STANDARD SECTION	01-01-05
	BA 3A	CAST IN PLACE CONSTANT SLOPE BARRIER	02-24-05
	BA 3B	PRECAST CONCRETE CONSTANT SLOPE TRANSITION SECTION FOR CRASH CUSHION AND W-BEAM GUARDRAIL	08-25-05
	BA 4A	W-BEAM GUARDRAIL HARDWARE	01-01-05
	BA 4B	W-BEAM GUARDRAIL TRANSITION	08-25-05
	BA 4C	W-BEAM GUARDRAIL TRANSITION CURB SECTIONS	02-24-05
	BA 4D	W-BEAM GUARDRAIL ANCHOR TYPE I	01-01-05
	BA 4E	W-BEAM GUARDRAIL INSTALLATIONS	01-01-05
	BA 4F	W-BEAM GUARDRAIL TYPICALS DIVIDED ROADWAYS	01-01-05
	BA 4G	W-BEAM GUARDRAIL TYPICAL MULTILANE ARTERIAL	01-01-05
	BA 4H	W-BEAM GUARDRAIL TYPICAL 2 LANE 2 WAY	01-01-05
	BA 4I	W-BEAM GUARDRAIL BURIED IN BACKSLOPE TERMINAL	01-01-05
	BA 4J	W-BEAM GUARDRAIL BURIED IN BACKSLOPE TERMINAL WITH RUB RAIL	01-01-05
	BA 4K	W-BEAM GUARDRAIL BURIED IN BACKSLOPE TERMINAL ANCHOR	01-01-05
	BA 4L	W-BEAM GUARDRAIL CURVE DETAILS	01-01-05
	BA 4M	W-BEAM GUARDRAIL NESTED GUARDRAIL 12' 6" SPAN	01-01-05
	BA 4N	W-BEAM GUARDRAIL NESTED GUARDRAIL 18' 9" SPAN	01-01-05
	BA 4O	W-BEAM GUARDRAIL NESTED GUARDRAIL 25' SPAN	01-01-05
	BA 4P	W-BEAM GUARDRAIL WITH PRECAST BARRIER FOR SPAN > 25'	01-01-05

	DWG. NO.	DESCRIPTION	DATE
		Catch Basins and Cleanouts (CB)	
	CB 1	CURB AND GUTTER INLET	04-28-05
	CB 2	OPEN CURB INLET	04-28-05
	CB 3	SHALLOW CATCH BASIN	04-28-05
	CB 4	OPEN CURB SHALLOW CATCH BASIN	01-01-05
	CB 5A	STANDARD CATCH BASIN AND CLEANOUT BOX	06-30-05
	CB 5B	STANDARD CATCH BASIN AND CLEANOUT BOX SECTION	01-01-05
	CB 6A	DROP INLET TYPE "A"	01-01-05
	CB 6B	BERM APRON WITH DROP INLET TYPE "A"	01-01-05
	CB 7A	DROP INLET TYPE "B"	01-01-05
	CB 7B	NORMAL APRON WITH DROP INLET TYPE "B"	01-01-05
	CB 8A	DOUBLE CATCH BASIN	01-01-05
	CB 8B	DOUBLE CATCH BASIN	01-01-05
	CB 9A	STANDARD CATCH BASIN AND CLEANOUT BOX SITUATION AND LAYOUT	01-01-05
	CB 9B	STANDARD CATCH BASIN AND CLEANOUT BOX SECTION DETAILS	01-01-05
	CB 9C	STANDARD CATCH BASIN AND CLEANOUT BOX SCHEDULE OF INSTALLATION 18" TO 42" RCP 12" TO 48" CMP	01-01-05
	CB 9D	STANDARD CATCH BASIN AND CLEANOUT BOX SCHEDULE OF INSTALLATION 48" TO 66" RCP 60" TO 78" CMP	01-01-05
	CB 10A	STANDARD CATCH BASIN AND CLEANOUT BOX SITUATION AND LAYOUT	01-01-05
	CB 10B	STANDARD CATCH BASIN AND CLEANOUT BOX SECTION DETAILS	01-01-05
	CB 10C	STANDARD CATCH BASIN AND CLEANOUT BOX SCHEDULE OF INSTALLATION 42" TO 60" RCP 48" TO 72" CMP	01-01-05
	CB 11	STANDARD MANHOLE	01-01-05
		Crash Cushions (CC)	
	CC 1	CRASH CUSHION MARKINGS	01-01-05
	CC 2	CRASH CUSHION DRAINAGE DETAILS GUIDELINE A	01-01-05
	CC 3	CRASH CUSHION DRAINAGE DETAILS GUIDELINE B	01-01-05
	CC 4	DETAIL FOR PLACEMENT CRASH CUSHIONS TYPE A, B AND D	01-01-05
	CC 5	GRADING AND PLACEMENT DETAILS CRASH CUSHION TYPE C	01-01-05
	CC 6	CRASH CUSHION TYPE E SAND BARREL DETAILS	01-01-05
	CC 7A	GRADING AND INSTALLATION DETAILS CRASH CUSHION TYPE F QUAD TREND 350	02-24-05
	CC 7B	CRASH CUSHION TYPE F BEAT-SSCC	08-25-05
	CC 8A	GRADING AND INSTALLATION DETAILS CRASH CUSHION TYPE G	04-28-05
	CC 8B	GRADING AND INSTALLATION DETAILS FOR "3R" PROJECTS CRASH CUSHION TYPE G	04-28-05
	CC 9A	GRADING AND INSTALLATION DETAILS CRASH CUSHION TYPE H	04-28-05
	CC 9B	GRADING AND INSTALLATION DETAILS CRASH CUSHION TYPE H (PARABOLIC FLARE)	04-28-05
		Diversion Boxes (DB)	
	DB 1A	STANDARD DIVERSION BOX/COVER PLATE/GRATING FOR 18" DIA. OR 24" DIA. PIPE	01-01-05
	DB 1B	STANDARD DIVERSION BOX HINGED LID DETAILS FOR 18" DIA. OR 24" DIA. PIPE	01-01-05
	DB 1C	STANDARD DIVERSION BOX BICYCLE-SAFE GRATING DETAILS FOR 18" DIA. OR 24" DIA. PIPE	01-01-05
	DB 1D	STANDARD DIVERSION BOX THREE GATE BOX SECTIONS FOR 18" DIA. OR 24" DIA. PIPE	01-01-05
	DB 1E	STANDARD DIVERSION BOX THREE GATE BOX SECTIONS FOR 18" DIA. OR 24" DIA. PIPE	01-01-05
	DB 1F	STANDARD DIVERSION BOX THREE GATE BOX SECTIONS FOR 18" DIA. OR 24" DIA. PIPE	01-01-05
	DB 2A	STANDARD DIVERSION BOX W/INTERCHANGEABLE WALLS, BOTTOM SLAB, WALLS AND APRON DETAILS	01-01-05
	DB 2B	STANDARD DIVERSION BOX W/INTERCHANGEABLE WALLS, QUANTITIES SCHEDULE	01-01-05
	DB 2C	STANDARD DIVERSION BOX W/INTERCHANGEABLE WALLS, HAND SLIDE GATE DETAILS	01-01-05
	DB 2D	STANDARD DIVERSION BOX TYPE "G" HAND SLIDE GATE DETAILS	01-01-05
	DB 2E	STANDARD DIVERSION BOX HINGED LID (SOLID COVER PLATE) TYPE "A" DETAILS TYPE I PLAN	01-01-05

	DWG. NO.	DESCRIPTION	DATE
	DB 2F	STANDARD DIVERSION BOX HINGED LID (SOLID COVER PLATE) TYPE "A" DETAILS TYPE II PLAN	01-01-05
	DB 2G	STANDARD DIVERSION BOX HINGED LID SOLID COVER TYPE "B" DETAILS	01-01-05
	DB 2H	STANDARD DIVERSION BOX HINGED LID SOLID COVER TYPE "B" AND "C" DETAILS	01-01-05
	DB 3A	STANDARD DIVERSION BOX WITH MANHOLE COVER SITUATION AND LAYOUT	01-01-05
	DB 3B	STANDARD DIVERSION BOX WITH MANHOLE COVER UP TO 42" RCP AND UP TO 54" CMP	01-01-05
	DB 3C	STANDARD DIVERSION BOX WITH MANHOLE COVER 48" TO 72" RCP AND 60" TO 84" CMP	01-01-05
	DB 4	STANDARD TRANSITION CONCRETE LINED DITCH TO PIPE OR DIVERSION BOX	01-01-05
		Design (DD)	
	DD 1	SUPERELEVATION AND WIDENING	01-01-05
	DD 2	SURFACE DITCH, BENCHED SLOPE, AND CUT DITCH DETAILS	01-01-05
	DD 3	CLIMBING LANES	01-01-05
	DD 4	GEOMETRIC DESIGN FOR FREEWAYS (ROADWAY)	04-28-05
	DD 5	ENTRANCE AND EXIT RAMPS AT CROSSROADS	01-01-05
	DD 6	ENTRANCE AND EXIT RAMP GEOMETRICS	01-01-05
	DD 7	FREEWAY CROSSOVER	01-01-05
	DD 8	STRUCTURAL GEOMETRIC DESIGN STANDARDS FOR CLEARANCES	01-01-05
	DD 9	STRUCTURAL GEOMETRIC DESIGN STANDARDS	01-01-05
	DD 10	RAILROAD CLEARANCES AT HIGHWAY OVERPASS STRUCTURES	01-01-05
	DD 11	RURAL MULTI LANE HIGHWAYS OTHER THAN FREEWAYS	01-01-05
	DD 12	RURAL TWO LANE HIGHWAYS	01-01-05
	DD 13	FRONTAGE AND ACCESS ROADS (UNDER 50 ADT)	01-01-05
	DD 14	TYPICAL RURAL 2 LANE ROAD WITH MEDIAN LANE AND DECELERATION LANE FOR INTERSECTING CROSSROADS	01-01-05
		Drainage (DG)	
	DG 1	FILL HEIGHT FOR METAL PIPE (STEEL)	08-25-05
	DG 2	FILL HEIGHT FOR METAL PIPE (ALUMINUM)	01-01-05
	DG 3	MAXIMUM FILL HEIGHT FOR HDPE AND PVC PIPES	01-01-05
	DG 4	PIPE MINIMUM COVER	01-01-05
	DG 5	PLASTIC PIPE, METAL PIPE OR PIPE ARCH CULVERT BEDDING	01-01-05
	DG 6	PRECAST CONCRETE PIPE CULVERT	01-01-05
	DG 7	GASKETTED JOINTS OR COUPLING BANDS FOR CMP	01-01-05
	DG 8	METAL CULVERT END SECTION	01-01-05
	DG 9	MISCELLANEOUS PIPE DETAILS	01-01-05
		Environmental Controls (EN)	
	EN 1	TEMPORARY EROSION CONTROL (CHECK DAMS)	08-25-05
	EN 2	TEMPORARY EROSION CONTROL (SILT FENCE)	08-25-05
	EN 3	TEMPORARY EROSION CONTROL (SLOPE DRAIN AND TEMPORARY BERM)	08-25-05
	EN 4	TEMPORARY EROSION CONTROL (DROP INLET BARRIERS)	08-25-05
	EN 5	TEMPORARY EROSION CONTROL (PIPE INLET AND CURB INLET BARRIERS)	08-25-05
	EN 6	TEMPORARY EROSION CONTROL (SEDIMENT TRAP AND STABILIZED CONSTRUCTION ENTRANCE)	08-25-05
	EN 7	TEMPORARY EROSION CONTROL (STRAW BALE BARRIER)	08-25-05

☒ MARKED BOXES INDICATE DRAWINGS APPLICABLE TO THIS PROJECT

REVISIONS

NO.	DATE	APPR.	REMARKS
1	02/24/05	B.A.	CHANGE 1
2	04/28/05	B.A.	CHANGE 2
3	06/30/05	B.A.	CHANGE 3
4	08/25/05	B.A.	CHANGE 4

UTAH DEPARTMENT OF TRANSPORTATION
STANDARD DRAWINGS FOR ROAD AND BRIDGE CONSTRUCTION
SALT LAKE CITY, UTAH

RECOMMENDED FOR APPROVAL — AUG.25,2005 DATE
CHAIRMAN STANDARDS COMMITTEE
APPROVED — AUG.25,2005 DATE
DEPUTY DIRECTOR

STANDARD DRAWING INDEX SHEET

STANDARD DRAWING TITLE

STD DWG
1-B

DGN File:L:\Standard.Drawings\Imperial\2005\Approved\Change4Approved\sheet1b.dgn
01-SEP-2005

UTAH DEPARTMENT OF TRANSPORTATION

STANDARD DRAWINGS FOR ROAD AND BRIDGE CONSTRUCTION

DWG. NO.	DESCRIPTION	DATE
	Fence and Gates (FG)	
FG 1A	RIGHT OF WAY FENCE AND GATES (WOOD POST)	01-01-05
FG 1B	RIGHT OF WAY FENCE AND GATES (WOOD POST)	01-01-05
FG 2A	RIGHT OF WAY FENCE AND GATES (METAL POST)	01-01-05
FG 2B	RIGHT OF WAY FENCE AND GATES (METAL POST)	01-01-05
FG 3	SWING GATES TYPE 1 FOR GATES LESS THAN 17'	02-24-05
FG 4A	DEER CROSSING DETAILS	04-28-05
FG 4B	DEER RAMP DETAILS	04-28-05
FG 5	SWING GATES TYPE II FOR GATES WIDER THAN 17'	01-01-05
FG 6	CHAIN LINK FENCE	01-01-05
	Grates, Frames and Trash Racks (GF)	
GF 1	MANHOLE FRAME AND GRATED COVER	01-01-05
GF 2	MANHOLE FRAME AND SOLID COVER	01-01-05
GF 3	RECTANGULAR GRATE AND FRAME	01-01-05
GF 4	DIRECTIONAL FLOW GRATE AND FRAME	01-01-05
GF 5	SOLID COVER AND FRAME	01-01-05
GF 6	MANHOLE STEPS	01-01-05
GF 7	STANDARD SCREW GATE AND FRAME	01-01-05
GF 8	2' x 2' GRATE AND FRAME	01-01-05
GF 9	28" x 24" DIRECTIONAL FLOW GRATE AND FRAME	01-01-05
GF 10	STANDARD TRASH RACKS 90° X-ING ANGLE	01-01-05
GF 11	STANDARD TRASH RACKS	01-01-05
GF 12	STANDARD TRASH RACKS	01-01-05
GF 13	OPEN CURB INLET GRATE AND FRAME	01-01-05
GF 14	SOLID COVER FOR STD DWG DB 1 MS-18 LOADING	01-01-05
GF 15	STANDARD SCREW GATE AND FRAME	01-01-05
	General Road Work (GW)	
GW 1	RAISED MEDIAN AND PLOWABLE END SECTION	01-01-05
GW 2	CONCRETE CURB AND GUTTER	01-01-05
GW 3	CONCRETE CURB AND GUTTER DETAILS	01-01-05
GW 4	CONCRETE DRIVEWAYS AND SIDEWALKS	01-01-05
GW 5A	PEDESTRIAN ACCESS	06-30-05
GW 5B	PEDESTRIAN ACCESS	06-30-05
GW 5C	PEDESTRIAN ACCESS	06-30-05
GW 6	RIGHT OF WAY MARKER	01-01-05
GW 7	NEWSPAPER AND MAILBOX STOP LAYOUT	01-01-05
GW 8	NEWSPAPER AND MAILBOX SUPPORT HARDWARE	01-01-05
GW 9	DELINEATION HARDWARE	01-01-05
GW 10	DELINEATION APPLICATION	01-01-05
GW 11	SIDEWALKS AND SHOULDERS ON URBAN ROADWAYS	01-01-05

DWG. NO.	DESCRIPTION	DATE
	Paving (PV)	
PV 1	JOINTS FOR HIGHWAYS WITH CONCRETE TRAFFIC LANES AND SHOULDERS	01-01-05
PV 2	PAVEMENT/APPROACH SLAB DETAILS	01-01-05
PV 3	CONCRETE PAVEMENT DETAILS FOR URBAN AND INTERSTATE	01-01-05
PV 4	CONCRETE PAVEMENT DETAILS FOR URBAN AND INTERSTATE	01-01-05
PV 5	URBAN CONCRETE PAVEMENT DETAILS	01-01-05
PV 6	RUMBLE STRIPS	01-01-05
PV 7	RUMBLE STRIPS-TYPICAL APPLICATION	01-01-05
PV 8	NOT USED	
PV 9	DOWEL BAR RETROFIT	01-01-05
	Signals (SL)	
SL 1A	TRAFFIC SIGNAL MAST ARM POLE AND LUMINAIRE EXTENSION	01-01-05
SL 1B	TRAFFIC SIGNAL MAST ARM POLE AND LUMINAIRE EXTENSION	01-01-05
SL 2	TRAFFIC SIGNAL MAST ARM DETAILS 30' THRU 75'	01-01-05
SL 3	UNDERGROUND SERVICE PEDESTAL DETAILS	01-01-05
SL 4	TRAFFIC SIGNAL MAST ARM POLE FOUNDATION	01-01-05
SL 5	TRAFFIC SIGNAL POLE	01-01-05
SL 6	POLE MOUNTED POWER SOURCE DETAILS	01-01-05
SL 7	SPAN WIRE SIGNAL POLE DETAILS	01-01-05
SL 8	SIGNAL HEAD DETAILS	01-01-05
SL 9	PEDESTRIAN SIGNAL ASSEMBLY	01-01-05
SL 10	TRAFFIC SIGNAL CONTROLLER BASE DETAILS	01-01-05
SL 11	TRAFFIC SIGNAL LOOP DETECTOR DETAILS	01-01-05
SL 12	TRAFFIC COUNTING LOOP DETECTOR DETAILS	04-28-05
SL 13	VIDEO DETECTION CAMERA MOUNT	04-28-05
SL 14	HIGHWAY LUMINAIRE POLE GROUND MOUNT	08-25-05
SL 15	LUMINAIRE SLIP BASE DETAILS	08-25-05
SL 16	HIGHWAY LUMINAIRE POLE BARRIER MOUNT	01-01-05
SL 17	HIGHWAY LUMINAIRE POLE FOUNDATION EXTENSION	01-01-05
SL 18	SINGLE TRANSFORMER SUBSTATION DETAILS	01-01-05
	Signs (SN)	
SN 1	BRIDGE LOAD LIMITS SIGNS	01-01-05
SN 2	SCHOOL SPEED LIMIT ASSEMBLY	01-01-05
SN 3	OVERHEAD SCHOOL SPEED LIMIT ASSEMBLY	01-01-05
SN 4	FLASHING STOP SIGN	01-01-05
SN 5	TYPICAL INSTALLATION FOR MILEPOST SIGNS	01-01-05
SN 6	SPEED REDUCTION SIGN SEQUENCE	01-01-05
SN 7	PLACEMENT OF GROUND MOUNTED SIGNS	01-01-05
SN 8	GROUND MOUNTED TIMBER SIGN POST (P1)	04-28-05
SN 9	GROUND MOUNTED TUBULAR STEEL SIGN POST (P2)	01-01-05
SN 10	GROUND MOUNTED SQUARE STEEL SIGN POST (P3)	01-01-05
SN 11	SLIPBASE GROUND MOUNTED TUBULAR STEEL SIGN POST (P4)	04-28-05
SN 12A	GROUND MOUNTED SIGN INSTALLATION DETAILS	08-25-05
SN 12B	GROUND MOUNTED SIGN INSTALLATION DETAILS	01-01-05
SN 12C	GROUND MOUNTED SIGN INSTALLATION DETAILS	01-01-05

DWG. NO.	DESCRIPTION	DATE
	Striping (ST)	
ST 1	OBJECT MARKERS "T" INTERSECTION AND PAVEMENT TRANSITION GUIDANCE	01-01-05
ST 2	FREEWAY CROSSOVER MARKINGS	01-01-05
ST 3	TYPICAL PAVEMENT MARKINGS	01-01-05
ST 4	CROSSWALKS, PARKING AND INTERSECTION APPROACHES	01-01-05
ST 5	PAINTED MEDIAN AND AUXILIARY LANE DETAILS	02-24-05
ST 6	PASSING/CLIMBING LANES TRAFFIC CONTROL	01-01-05
ST 7	PAVEMENT MARKINGS AND SIGNS AT RAILROAD CROSSING	01-01-05
ST 8	PLOWABLE PAVEMENT MARKERS	01-01-05
ST 9	SCHOOL CROSSING AND SCHOOL MESSAGE	01-01-05
	Structures and Walls (SW)	
SW 1A	WELDED END GUARD UNIT	01-01-05
SW 1B	PRECAST CONCRETE CATTLE GUARD	01-01-05
SW 2	NOISE WALL PLACEMENT AREA	01-01-05
SW 3A	PRECAST CONCRETE NOISE WALL 1 OF 2	01-01-05
SW 3B	PRECAST CONCRETE NOISE WALL 2 OF 2	01-01-05
SW 4A	PRECAST CONCRETE RETAINING/NOISE WALL 1 OF 2	01-01-05
SW 4B	PRECAST CONCRETE RETAINING/NOISE WALL 2 OF 2	01-01-05
	Traffic Control (TC)	
TC 1A	CONSTRUCTION ZONE CHANNELIZATION DEVICES	01-01-05
TC 1B	CONSTRUCTION ZONE SIGNING	01-01-05
TC 2A	TRAFFIC CONTROL GENERAL	01-01-05
TC 2B	TRAFFIC CONTROL GENERAL	01-01-05
TC 3	TRAFFIC CONTROL PROJECT LIMIT SIGNING	01-01-05
TC 4	TRAFFIC CONTROL URBAN INTERSECTIONS WITH ROADWAYS UNDER 50 MPH	01-01-05
TC 5	TRAFFIC CONTROL URBAN INTERSECTIONS WITH ROADWAYS UNDER 50 MPH	01-01-05
TC 6	TRAFFIC CONTROL PEDESTRIAN ROUTING	01-01-05
TC 7	TRAFFIC CONTROL ROAD CLOSED, DETOUR	01-01-05
TC 8	TRAFFIC CONTROL LANE CLOSURE	01-01-05
TC 9	TRAFFIC CONTROL MULTILANE CLOSURE	01-01-05
TC 10	TRAFFIC CONTROL EXPRESSWAY AND FREEWAY CROSSOVER/ TURN AROUND	01-01-05
TC 11	TRAFFIC CONTROL EXIT RAMP GORE	01-01-05
TC 12	TRAFFIC CONTROL ENTRANCE RAMP GORE	01-01-05
TC 13	TRAFFIC CONTROL SHOULDER-HAUL ROAD	01-01-05
TC 14	TRAFFIC CONTROL FLAGGING OPERATION	01-01-05
TC 15	TRAFFIC CONTROL 2 LANE / 2 WAY SEAL COAT WITH COVER MATERIAL	01-01-05
TC 16	TRAFFIC CONTROL PAVEMENT MARKING	01-01-05

☒ MARKED BOXES INDICATE DRAWINGS APPLICABLE TO THIS PROJECT

REVISIONS

NO.	DATE	APPR.	REMARKS
1	02/24/05	B.A.	CHANGE 1
2	04/28/05	B.A.	CHANGE 2
3	06/30/05	B.A.	CHANGE 3
4	08/25/05	B.A.	CHANGE 4

UTAH DEPARTMENT OF TRANSPORTATION
STANDARD DRAWINGS FOR ROAD AND BRIDGE CONSTRUCTION
SALT LAKE CITY, UTAH

RECOMMENDED FOR APPROVAL — AUG.25,2005 DATE
CHAIRMAN STANDARDS COMMITTEE APPROVED — AUG.25,2005 DATE
DEPUTY DIRECTOR

STANDARD DRAWING INDEX SHEET

STANDARD DRAWING TITLE

STD DWG
1-C

DGN File:L:\Standard.Drawings\Imperial\2005\Approved\Change4Approved\sheet1c.dgn
01-SEP-2005

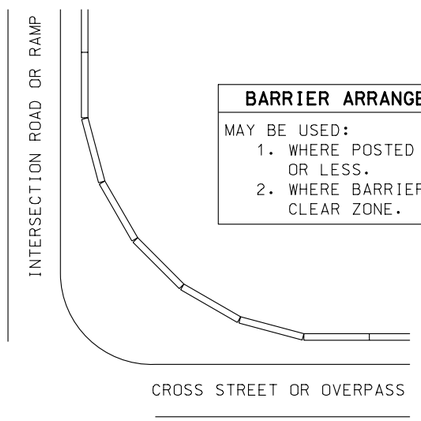

BARRIER ARRANGED ON A CURVE

MAY BE USED:
1. WHERE POSTED SPEED IS 35 MPH OR LESS.
2. WHERE BARRIER IS OUTSIDE THE CLEAR ZONE.

CURVED LAYOUT

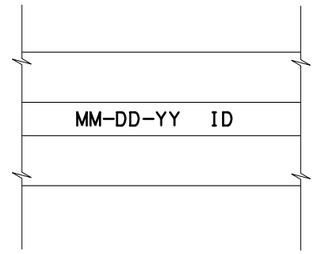

BARRIER MARKINGS

SEE NOTE 1

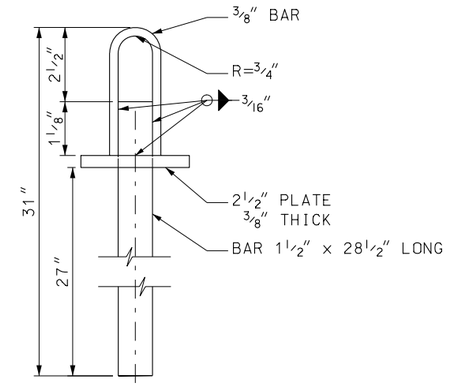

GALVANIZED CONNECTING PIN

OPTION 1

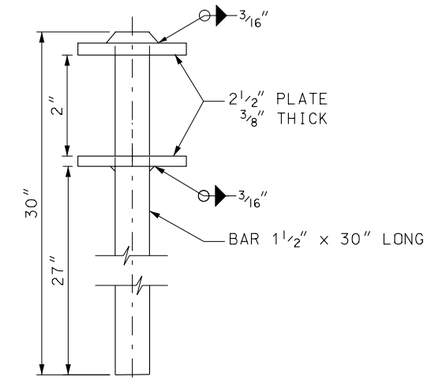

GALVANIZED CONNECTING PIN

OPTION 2

SEE NOTE 5

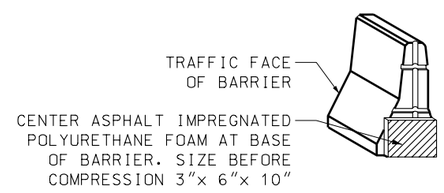

BARRIER SEAL

SEE NOTE 3

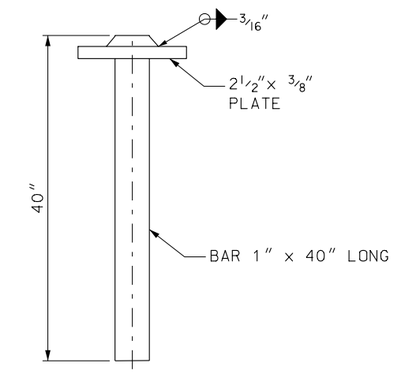

STABILIZATION PIN

SEE NOTE 5

METAL REINFORCEMENT TABLE

MARK	LOCATION	BAR SIZE	(NO. BARS)	SKETCH
H-1	HORIZONTAL IN BARRIER TIED INSIDE V-1 BARS	#5	(6)	19'-3"
H-2	CENTERED ABOVE SCUPPERS LONG. & TRANSVERSELY	#5	(6)	6'-6"
H-3	TIED ABOVE H-1 BARS TO SUPPORT H-2, TIED TO V-1	#4	(2)	1'-6"
S-1	2 BARS CENTERED OVER EACH LIFTING HOLE	#4	(4)	3 3/8"R, 2'-5", 90°, LIFTING HOLE
S-2	HORIZ. AROUND SLOTS BETWEEN V-I SCUPPERS	#4	(2)	(4)1 1/2"R, SLOTS, 7", 12" OVERLAO, 1'-6", 1"MIN CLEAR TO BAR, 1"MIN
V-1	VERTICAL IN BARRIER(3) EACH END & (2) AT EACH SCUPPER	#5	(16)	TOTAL LENGTH 4'-9", 2 3/16"R, 4 3/8", 12°, 9 1/2", 2'-1 3/8"

NOTES:

1. MARK EACH BARRIER WITH 1 1/2" NUMBERS INDICATING THE DATE OF CASTING AND IDENTIFICATION NUMBER SUPPLIED BY THE INSPECTOR, IMPRESSED 1/4" DEEP INTO THE TOP CENTER OF THE BARRIER.
2. USE COATED REINFORCING STEEL EXCEPT AS NOTED.
3. DO NOT USE BARRIER SEAL WHEN SCUPPERS ARE PRESENT ON BARRIER.
4. PLACE AN ADEQUATE AMOUNT OF SILICONE ADHESIVE ON BOTTOM OF WASHER BEFORE INSERTING PIN TO HOLD IN PLACE AND PREVENT EASY HAND REMOVAL.
5. USE OF A HOT FORGED HEAD, MEETING PLATE SIZE AND THICKNESS IS ACCEPTABLE IN PLACE OF A WELDED PLATE.

REVISIONS

NO.	DATE	APPR.	REMARKS
1	08/25/05	G.S.	ADDED NOTE 5. CORRECTED CONNECTION PIN OPTION 1 DIMENSIONS. CHANGED WELDING INFORMATION ON PIN DETAIL.

UTAH DEPARTMENT OF TRANSPORTATION

STANDARD DRAWINGS FOR ROAD AND BRIDGE CONSTRUCTION

SALT LAKE CITY, UTAH

RECOMMENDED FOR APPROVAL — AUG.25,2005 DATE

CHAIRMAN STANDARDS COMMITTEE APPROVED — AUG.25,2005 DATE

DEPUTY DIRECTOR

PRECAST CONCRETE FULL BARRIER STANDARD SECTION

STANDARD DRAWING TITLE

STD DWG

BA 1B

DGN File:L:\Standard\Drawings\Imperial\2005\Approved\Change4Approved\BA01B.dgn
01-SEP-2005

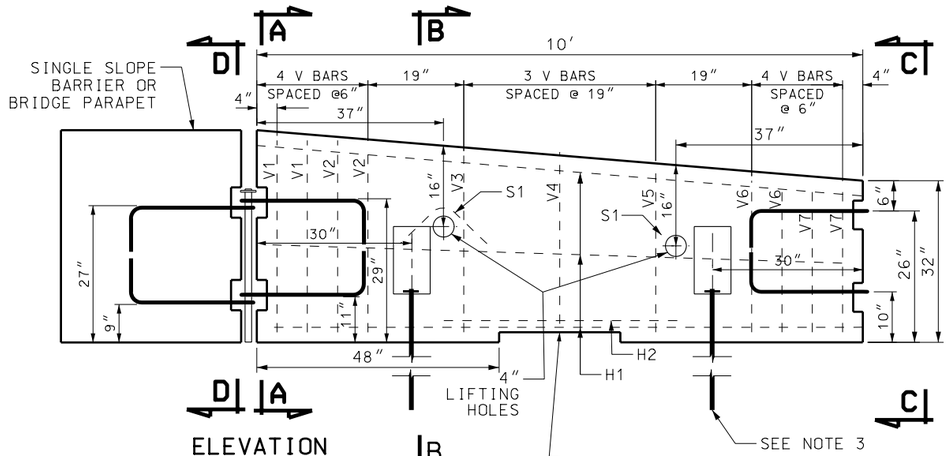

ELEVATION

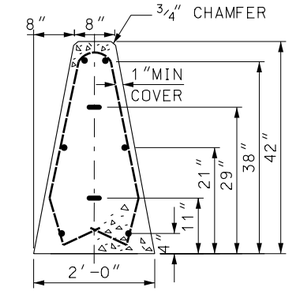

SECTION A-A

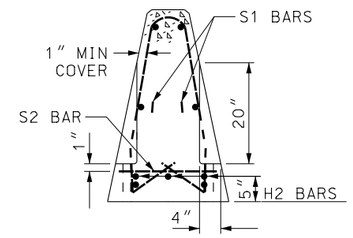

SECTION B-B

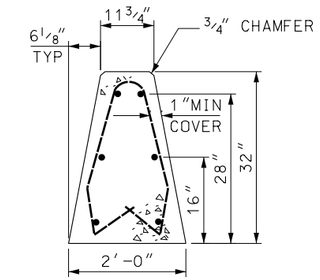

SECTION C-C

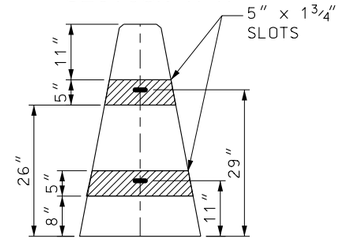

SLOT DETAIL
SECTION A-A

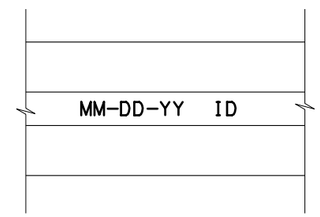

BARRIER MARKINGS
SEE NOTE 6

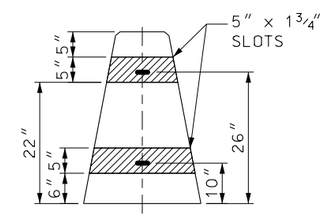

SLOT DETAIL
SECTION C-C

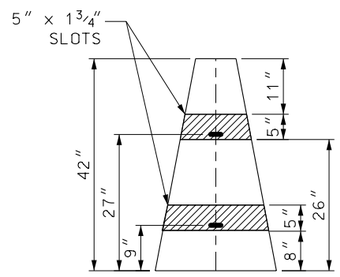

SECTION D-D

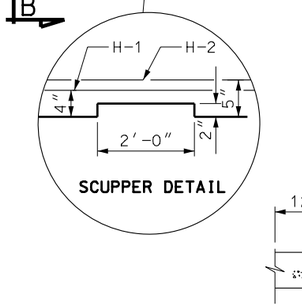

SCUPPER DETAIL

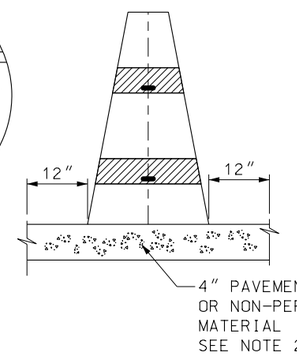

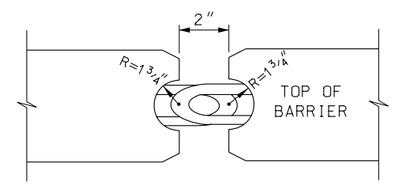

PIN ACCESS DETAIL

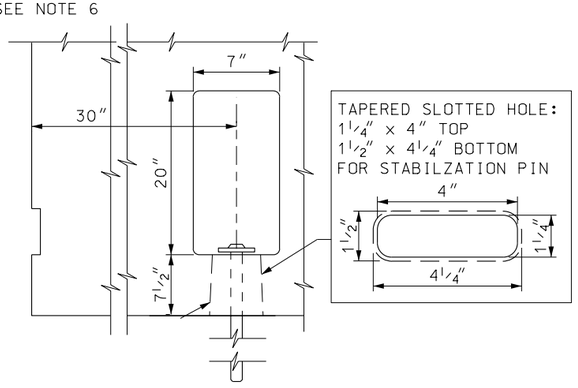

BARRIER STABILIZATION SLOT DETAIL

STEEL REINFORCEMENT TABLE

MARK	BAR SIZE	NO. OF BARS	SKETCH
H1	#5	(6) RUN THROUGH LENGTH OF BARRIER	9'-1"
H2	#5	(3) BARS CENTERED OVER SCUPPER	4'-4"
S1	#4	(2) 2 BARS CENTERED OVER EACH LIFTING HOLE	3 3/8"R, 2'-5", 90°, 1" COVER
S2	#4	(2) BARS CENTERED 1" BELOW TOP OF STABILIZATION PIN SLOTS	1 1/2"R, SLOTS, 7", 1'-6", 1" MIN CLEAR TO BAR

		#		D
V1	#5	2	(11) BARS PLACED AS PER ELEVATION DETAIL	38"
V2	#5	2		37"
V3	#5	1		35"
V4	#5	1		34"
V5	#5	1		33"
V6	#5	2		30"
V7	#5	2		29"

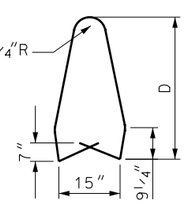

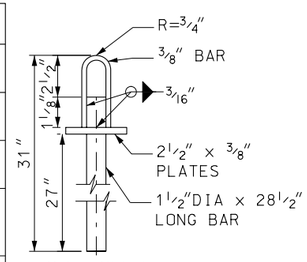

OPTION 1

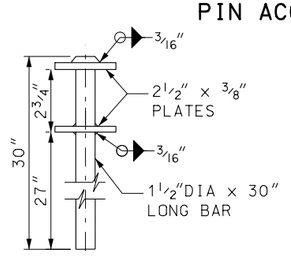

OPTION 2

GALVANIZED CONNECTION PIN
SEE NOTE 9

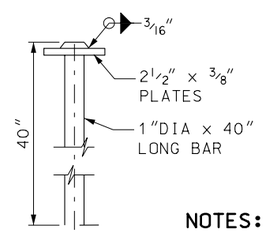

GALVANIZED STABILIZATION PIN
SEE NOTE 9

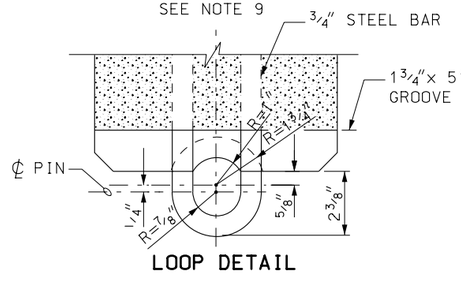

LOOP DETAIL

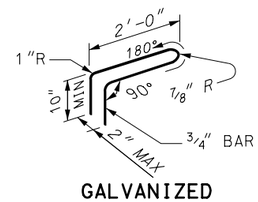

GALVANIZED STEEL BAR

CONNECTION DETAILS

NOTES:

1. TRANSITION SECTION REQUIRED WHEN A CRASH CUSHION OR W-BEAM GUARDRAIL TRANSITION IS REQUIRED ON A CONSTANT SLOPE BRIDGE PARAPET.
2. PROVIDE 4" OF PAVEMENT OR NON-PERMEABLE MATERIAL 1' IN FRONT OF AND 1' ON BOTH SIDES OF TRANSITION SECTION. PLACE TRANSITION SECTION ON TOP OF FINAL PAVEMENT COURSE.
3. ALL APPLICATIONS REQUIRE THE INSTALLATION OF STABILIZATION PINS AND CONNECTION PINS. PRE DRILL 1" HOLE THROUGH PAVEMENT SURFACE PRIOR TO INSTALLING STABILIZATION PINS.
4. USE A 4" WHITE PVC SLEEVE TO FORM THE LIFTING HOLES. LEAVE SLEEVE IN PLACE AFTER CASTING.
5. PLACE AN ADEQUATE AMOUNT OF SILICONE ADHESIVE ON BOTTOM OF WASHER BEFORE INSERTING PIN TO HOLD IN PLACE AND PREVENT EASY HAND REMOVAL.
6. MARK EACH BARRIER WITH 1 1/2" NUMBERS INDICATING THE DATE OF CASTING AND IDENTIFICATION NUMBER SUPPLIED BY THE INSPECTOR, IMPRESSED 1/4" DEEP INTO THE TOP CENTER OF THE BARRIER.
7. USE COATED REINFORCEMENT STEEL.
8. USE CLASS AA(AE) CONCRETE.
9. USE OF A HOT FORGED HEAD, MEETING PLATE SIZE AND THICKNESS IS ACCEPTABLE IN PLACE OF A WELDED PLATE.

REVISIONS

NO.	DATE	APPR.	REMARKS
1	02-24-05	G.S.	NEW DRAWING.
2	08-25-05	G.S.	ADDED NOTE 9. CORRECTED CONNECTION PIN OPTION I DIMENSIONS. CHANGED WELDING INFORMATION ON PIN DETAIL.

UTAH DEPARTMENT OF TRANSPORTATION
STANDARD DRAWINGS FOR ROAD AND BRIDGE CONSTRUCTION
SALT LAKE CITY, UTAH

RECOMMENDED FOR APPROVAL — AUG.25,2005 DATE
CHAIRMAN STANDARDS COMMITTEE APPROVED — AUG.25,2005 DATE
DEPUTY DIRECTOR

PRECAST CONCRETE CONSTANT SLOPE TRANSITION SECTION FOR CRASH CUSHION AND W-BEAM GUARDRAIL
STANDARD DRAWING TITLE

STD DWG
BA 3B

DGN File: L:\Standard Drawings\Imperial\2005Approved\ChangeMApproved\BA038.dgn
01-SEP-2005

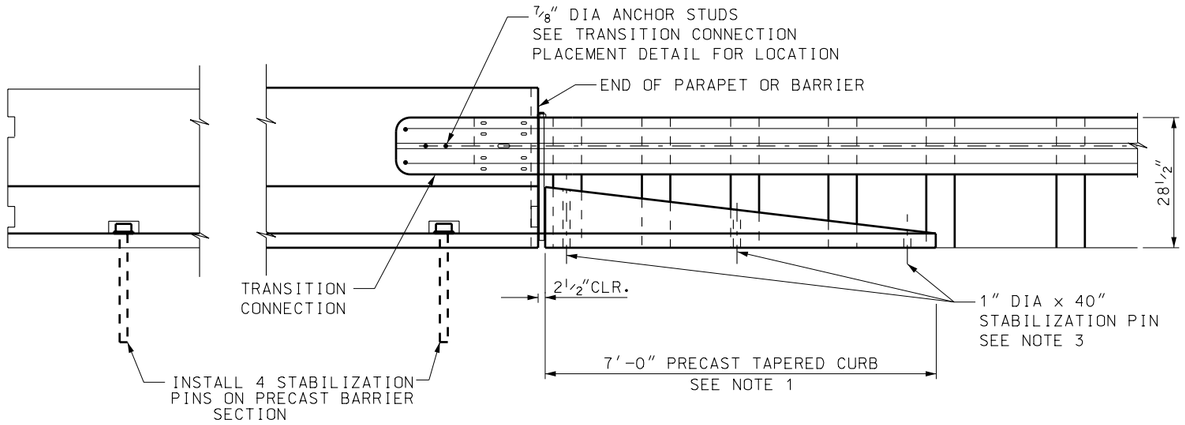

ELEVATION

RIGHT SIDE SHOWN LEFT SIDE SIMILAR

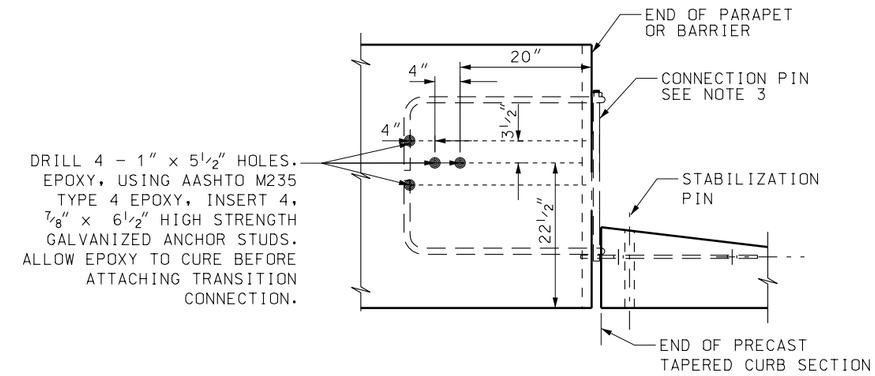

TRANSITION CONNECTION AND CURB SECTION PLACEMENT DETAIL

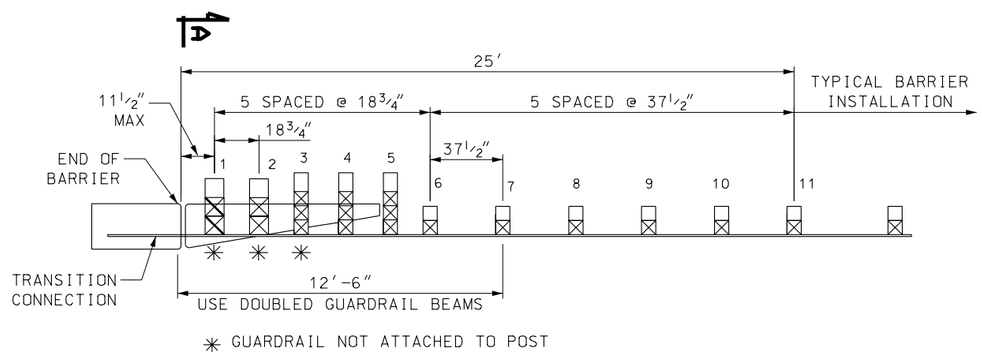

POST PLACEMENT DETAIL

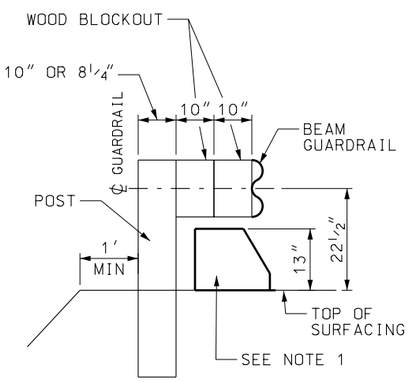

SECTION A-A

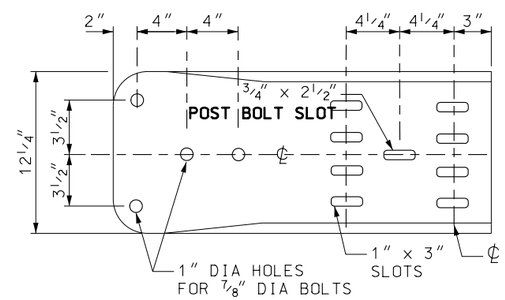

TRANSITION CONNECTION

WOOD POST OPTION
POST # 1 & # 2
POSTS 10" x 10" x 8'
BLOCKS 10" x 10" x 14"
POSTS # 3 THROUGH # 11
TYPICAL WOOD POSTS
AND BLOCKS
(SEE STD DWG BA 4A)

STEEL POST OPTION
POSTS # 1 & # 2
W8 x 21 x 8'
BLOCKS 6" x 8" x 14"
POSTS # 3 THROUGH # 11
TYPICAL STEEL POSTS
AND BLOCKS
(SEE STD DWG BA 4A)

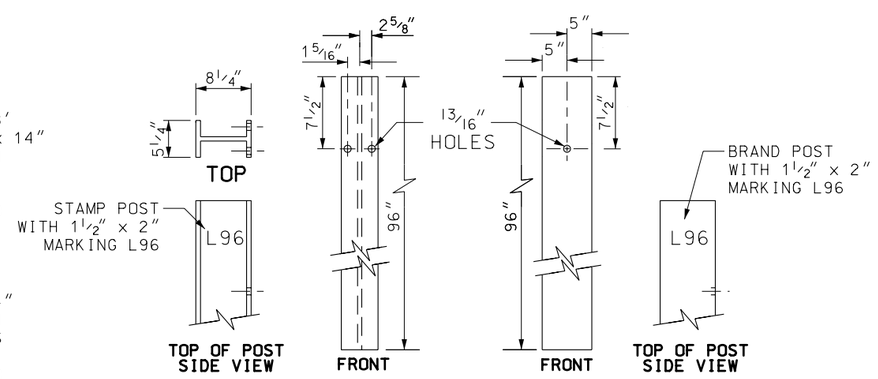

POSTS # 1 AND # 2 OPTIONS

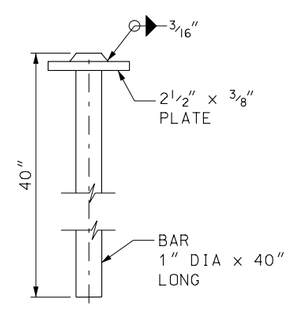

STABILIZATION PIN

SEE NOTE 5

NOTES:

1. SEE PLAN SET FOR BARRIER OR PARAPET TYPE TO DETERMINE APPROPRIATE CURB SECTION. SEE STD DWG BA 4C FOR CURB SECTION REQUIREMENTS.
2. COMPLETE SITE PREPARATION PRIOR TO INSTALLING TRANSITION.
3. INSTALL A CONNECTION PIN USING A CONNECTION PIN FROM STD DWG BA 1A.
4. PRE-DRILL 1" HOLE THROUGH PAVED SURFACE PRIOR TO INSTALLING STABILIZATION PINS.
5. USE OF A HOT FORGED HEAD, MEETING PLATE SIZE AND THICKNESS IS ACCEPTABLE IN PLACE OF A WELDED PLATE.

REVISIONS

NO.	DATE	APPR.	REMARKS
1	02/24/05	G.S.	TITLE CHANGED. DRAWING COMPLETELY REVISED.
2	08/25/05	G.S.	ADDED NOTE 5. CHANGED WELDING INFORMATION ON PIN DETAIL.

UTAH DEPARTMENT OF TRANSPORTATION
STANDARD DRAWINGS FOR ROAD AND BRIDGE CONSTRUCTION
SALT LAKE CITY, UTAH

RECOMMENDED FOR APPROVAL — AUG.25,2005 DATE
CHAIRMAN STANDARDS COMMITTEE APPROVED — AUG.25,2005 DATE
DEPUTY DIRECTOR

W-BEAM GUARDRAIL TRANSITION
STANDARD DRAWING TITLE

STD DWG
BA 4B

DGN File: L:\Standard Drawings\Imperial\2005Approved\xChange4\approved\BA04B.dgn
01-SEP-2005

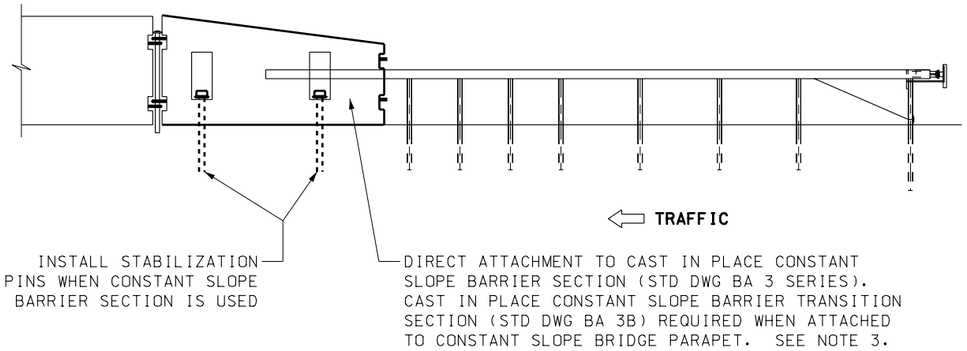

DETAIL WHEN SYSTEM IS INSTALLED WITH CONSTANT SLOPE BARRIER

(GROUND MOUNTED POST SHOWN, SURFACE MOUNTED STEEL BREAKAWAY POST ACCEPTABLE, SEE NOTE 4)

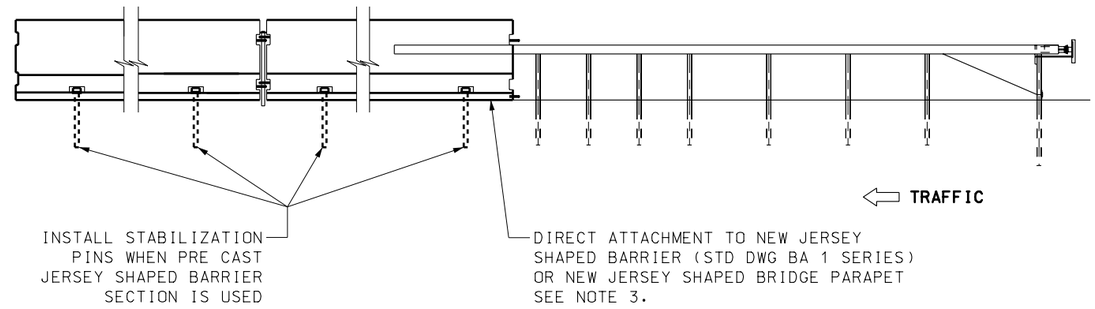

DETAIL WHEN SYSTEM IS INSTALLED WITH NEW JERSEY SHAPED BARRIER

(GROUND MOUNTED STEEL BREAKAWAY POST SHOWN SURFACE MOUNTED POSTS ACCEPTABLE, SEE NOTE 4)

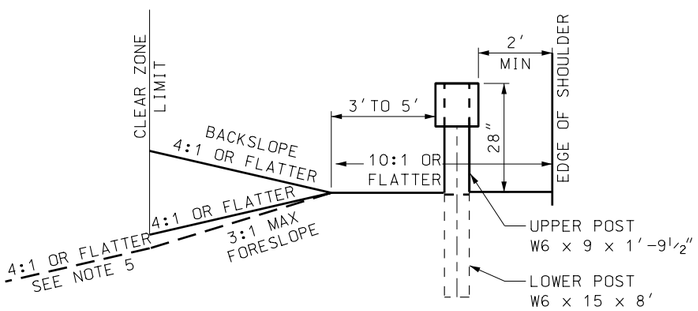

SECTION A-A

POST 1

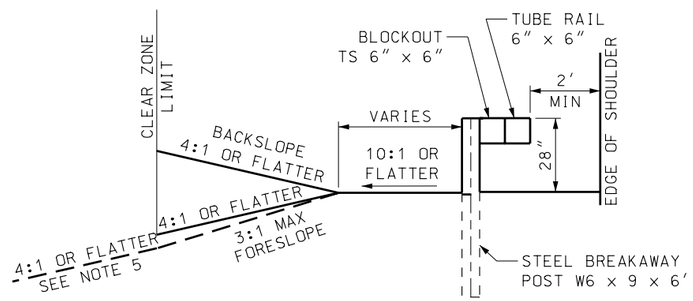

SECTION B-B

POSTS 2 TO POST 6

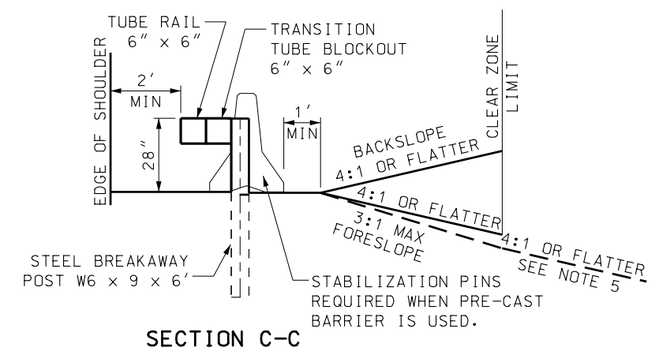

SECTION C-C

POSTS 7-8

TABLE 1	
SPEED MPH	TAPER
LESS THAN 40	7:1
40 TO 55	10:1
60 TO 75	15:1

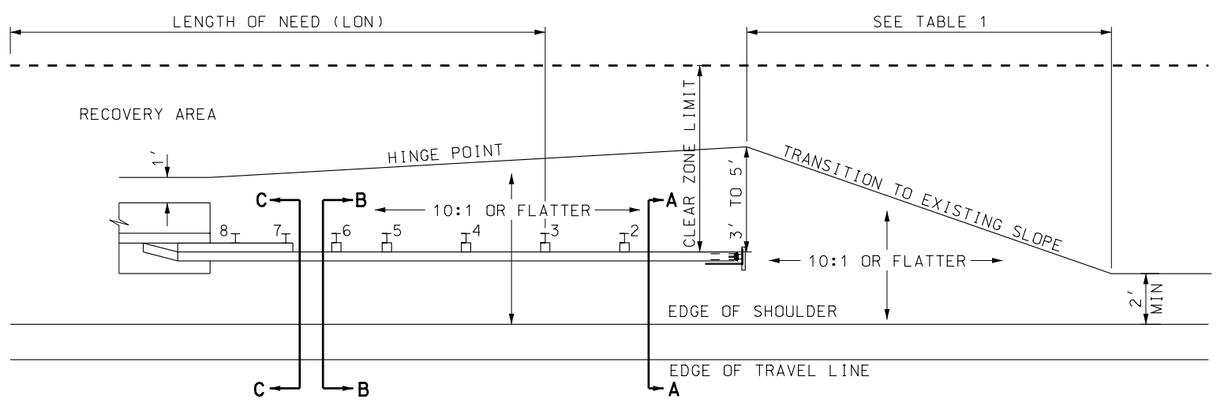

NOTES FOR CRASH CUSHION TYPE F

1. THE BEAT-SSCC, MANUFACTURED BY ROAD SYSTEMS INC. SEE UDOT'S GUIDELINES FOR CRASH CUSHIONS FOR SPECIFIC SYSTEM DETAILS.
2. USE SYSTEM WHEN DIRECT ATTACHMENT TO BARRIER IS REQUIRED AND THERE IS LESS THAN 125 FEET OF LONGITUDINAL SPACE IN FRONT OF THE HAZARD. INSTALL SYSTEM AS PER UDOT'S AND MANUFACTURER'S SPECIFICATIONS.
3. ATTACH SYSTEM TRANSITION TO BARRIER OR BRIDGE PARAPET AS PER MANUFACTURER'S REQUIREMENTS.
4. HAVE SHOP DRAWING AVAILABLE ON SITE FOR REFERENCE DURING INSTALLATION.
5. THE BEAT-SSCC REQUIRES A GRADED AND COMPACTED SURFACE WHEN GROUND MOUNTED POSTS ARE USED. SURFACE MOUNTED POST OPTIONAL, USE MANUFACTURER'S SPECIFICATIONS FOR CONCRETE PAD, POSTS AND MOUNTING HARDWARE.
6. COMPLETE SLOPE PREPARATION PRIOR TO INSTALLING SYSTEM.
   A. USE 10:1 OR FLATTERSLOPES IN APPROACH AREA.
   B. USE 4:1 OR FLATTER FORESLOPE OR BACKSLOPE IN THE RECOVERY AREA.
      1) IF A 4:1 FORESLOPE IN RECOVERY AREA IS IMPRACTICAL USE A RECOVERY AREA AT THE TOE OF THE 3:1 FORESLOPE OF 4:1 OR FLATTER.
      2) MAXIMUM 4:1 BACKSLOPE TO THE CLEAR ZONE LIMIT IN THE RECOVERY AREA.
7. CLEAR RECOVERY AND APPROACH AREAS OF ANY FIXED OBJECTS.
   A. DO NOT PLACE SIGNS OR POLES IN APPROACH AREA.
   B. USE BREAKAWAY SIGNS OR POLES WHEN PLACED IN RECOVERY AREA. MAINTAIN A MINIMUM 10 FOOT CLEARANCE TO SYSTEM.
8. INSTALL REQUIRED MARKING AS PER STD DWG CC 1, TYPE G.
9. REFER TO THE CURRENT EDITION OF THE AASHTO ROADSIDE DESIGN GUIDE TO DETERMINE LENGTH OF NEED (LON) AND CLEAR ZONE REQUIREMENTS.

REVISIONS

NO.	DATE	APPR.	REMARKS
1	08/25/05	G.S.	NEW DRAWING.

UTAH DEPARTMENT OF TRANSPORTATION
STANDARD DRAWINGS FOR ROAD AND BRIDGE CONSTRUCTION
SALT LAKE CITY, UTAH

RECOMMENDED FOR APPROVAL — AUG.25,2005 DATE
CHAIRMAN STANDARDS COMMITTEE APPROVED — AUG.25,2005 DATE
DEPUTY DIRECTOR

CRASH CUSHION TYPE F BEAT-SSCC

STANDARD DRAWING TITLE

STD DWG CC 7B

DGN File:L:\Standard Drawings\Imperial\2005\Approved\x\Change4\Approved\CC07B.dgn

01-SEP-2005

CORRUGATED STEEL PIPE ARCHES
2 2/3" x 1/2" CORRUGATIONS

PIPE DIM. SPAN X RISE inch	CORNER RADIUS inch	MIN. COVER inch	MIN. THICKNESS inch	MAX. FILL HEIGHT ft.
17 x 13	3	18	0.064	11
21 x 15	3	18	0.064	9
24 x 18	3	24	0.064	7
28 x 20	3	24	0.064	5
35 x 24	4	30	0.064	6
42 x 29	4 1/2	30	0.064	5
49 x 33	5 1/2	30	0.079	5
57 x 38	6 1/2	30	0.109	6
64 x 43	7	30	0.109	5
71 x 47	8	24	0.138	5
77 x 52	8 1/2	24	0.168	5
83 x 57	9	24	0.168	5

SEE NOTE 1

CORRUGATED STEEL PIPE ARCHES
6" x 2" CORRUGATIONS
BOLTED FABRICATION 4 BOLTS/FT 3/4" DIA.

PIPE DIM. SPAN X RISE ft-inch	CORNER RADIUS inch	MIN. COVER inch	MIN. THICKNESS inch	MAX. FILL HEIGHT ft.
6-1 x 4-7	18	18	0.109	16
7-0 x 5-1	18	18	0.109	14
7-11 x 5-7	18	18	0.109	12
8-10 x 6-1	18	24	0.109	11
9-9 x 6-7	18	24	0.109	10
10-11 x 7-1	18	24	0.109	8
11-10 x 7-7	18	24	0.109	7
12-10 x 7-7	18	24	0.109	6
14-1 x 8-4	18	30	0.109	5
15-4 x 9-3	21	24	0.138	6
15-10 x 9-10	21	24	0.138	5
16-7 x 10-9	21	24	0.138	4
13-3 x 9-4	31	24	0.109	12
14-3 x 9-10	31	24	0.109	11
15-4 x 10-4	31	24	0.138	10
16-3 x 10-10	31	24	0.138	9
17-2 x 11-4	31	30	0.138	9
18-1 x 11-10	31	30	0.168	8
19-3 x 12-4	31	30	0.168	7
19-11 x 12-10	31	30	0.168	7
20-7 x 13-10	31	36	0.188	7

ROUND CORRUGATED STEEL PIPE
3" x 1" CORRUGATIONS

THICKNESS	0.064		0.079		0.109		0.138		0.168	
PIPE DIAMETER inch	MIN. COVER inch	MAX. FILL ft.	MIN. COVER inch	MAX. FILL ft.	MIN. COVER inch	MAX. FILL ft.	MIN. COVER inch	MAX. FILL ft.	MIN. COVER inch	MAX. FILL ft.
36	12	81	12	102	12	143	12	184	12	225
42	12	70	12	87	12	122	12	157	12	193
48	12	61	12	76	12	107	12	138	12	159
54	12	54	12	68	12	95	12	122	12	150
60	12	49	12	61	12	85	12	110	12	135
66	13	44	12	55	12	78	12	100	12	122
72	15	40	13	51	12	71	12	92	12	112
78	16	37	14	47	12	66	12	85	12	104
84	17	35	15	43	13	61	12	78	12	96
90	18	32	16	40	14	57	12	73	12	90
96			17	38	15	53	13	69	12	84
102			18	36	15	50	14	65	13	79
108					16	47	14	61	14	75
114					17	45	15	58	15	71
120					18	42	16	55	15	67
126							17	52	16	64
132							17	50	17	61
138							18	48	18	58
144									18	56

SEE NOTE 1

ROUND CORRUGATED STEEL STRUCTURAL PLATE PIPE
6" x 2" CORRUGATIONS
BOLTED FABRICATION 4 BOLTS/FT 3/4" DIA. THICKNESS

THICKNESS		0.109	0.138	0.168	0.186	0.218	0.249	0.280
PIPE DIAMETER inch	MIN. COVER inch	MAX. FILL ft.	MAX. FILL ft.	MAX. FILL ft.	MAX. FILL ft.	MAX. FILL ft.	MAX. FILL ft.	MAX. FILL ft.
60	12	46	68	90	103	124	146	160
66	12	42	62	81	93	113	133	145
72	12	38	57	75	86	103	122	135
78	12	35	52	69	79	95	112	123
84	12	33	49	64	73	88	104	114
90	12	31	45	60	68	82	97	106
96	12	29	43	56	64	77	91	100
102	13	27	40	52	60	73	86	94
108	14	25	38	50	57	69	81	88
114	15	24	36	47	54	65	77	84
120	15	23	34	45	51	62	73	80
126	16	22	32	42	49	59	69	76
132	17	21	31	40	46	56	66	72
138	18	20	29	39	44	54	63	69
144	18	19	28	37	43	51	61	66
150	19	18	27	36	41	49	58	64
156	20	17	26	34	39	47	56	61
162	21	17	25	33	38	46	54	59
168	21	16	24	32	36	44	52	57
174	22	16	23	31	35	42	50	55
180	23	15	22	30	34	41	48	53
186	24	15	22	29	33	40	47	51
192	24		21	28	32	38	45	50
198	25		20	27	31	37	44	48
204	26		20	26	30	36	43	47
210	27		19	25	29	35	42	45
216	27			25	28	34	41	44
222	28			24	27	33	40	43
228	29			23	27	32	39	42
234	30			23	26	31	38	41
240	30				25	31	37	40
246	31				25	30	36	39
252	32					29	35	38
258	33					28	34	37
264	33					28	34	36
270	34					27	33	35
276	35						32	34
282	36						32	34
288	36						31	33
294	37							32
300	38							32
306	39							31

ROUND CORRUGATED STEEL PIPE
2 2/3" x 1/2" CORRUGATIONS

THICKNESS	0.064		0.079		0.109		0.138		0.168	
PIPE DIAMETER inch	MIN. COVER inch	MAX. FILL ft.	MIN. COVER inch	MAX. FILL ft.	MIN. COVER inch	MAX. FILL ft.	MIN. COVER inch	MAX. FILL ft.	MIN. COVER inch	MAX. FILL ft.
12	12	213	12	266	12	372	12	479	12	586
15	12	170	12	212	12	298	12	383	12	469
18	12	142	12	177	12	248	12	319	12	391
21	12	121	12	152	12	213	12	274	12	335
24	12	106	12	133	12	186	12	239	12	293
27	12	94	12	118	12	165	12	213	12	260
30	12	85	12	106	12	149	12	191	12	234
36	12	71	12	88	12	124	12	159	12	195
42	12	60	12	76	12	106	12	137	12	167
48	12	53	12	66	12	93	12	119	12	146
54			12	59	12	82	12	106	12	130
60					12	74	12	95	12	117
66							13	87	12	106
72							14	79	13	97
78									14	86
84									15	75

SEE NOTE 1

ROUND CORRUGATED STEEL PIPE
3/4" x 1" SPIRAL RIB PIPE

THICKNESS	0.064		0.079		0.109	
PIPE DIAMETER inch	MIN. COVER inch	MAX. FILL ft.	MIN. COVER inch	MAX. FILL ft.	MIN. COVER inch	MAX. FILL ft.
24	12	56	12	70	12	99
30	12	45	12	56	12	79
36	12	37	12	47	12	66
42	12	32	12	40	12	56
48	12	28	12	35	12	49
54		25	15	31	15	44
60		22	15	28	15	39
66			18	25	18	36
72			18	23	18	33
78					21	30
84					21	28

CORRUGATED STEEL PIPE ARCHES
3" x 1" OR 5" x 1" CORRUGATIONS

PIPE DIM. SPAN X RISE inch	CORNER RADIUS inch	MIN. COVER inch	MIN. THICKNESS inch	MAX. FILL HEIGHT ft.
53 x 41	7	24	0.109	7
60 x 46	8	24	0.109	7
66 x 51	9	18	0.109	9
73 x 55	12	18	0.109	10
81 x 59	14	18	0.109	11
87 x 63	14	18	0.109	10
95 x 67	16	18	0.109	11
103 x 71	16	24	0.109	10
112 x 75	18	24	0.109	10
117 x 79	18	24	0.109	10
128 x 83	18	24	0.138	8
137 x 87	18	24	0.138	7
142 x 91	18	24	0.168	7

SEE NOTE 1

ROUND CORRUGATED STEEL PIPE
5" x 1" CORRUGATIONS

THICKNESS	0.064		0.079		0.109		0.138		0.168	
PIPE DIAMETER inch	MIN. COVER inch	MAX. FILL ft.	MIN. COVER inch	MAX. FILL ft.	MIN. COVER inch	MAX. FILL ft.	MIN. COVER inch	MAX. FILL ft.	MIN. COVER inch	MAX. FILL ft.
36	12	72	12	90	12	127	12	163	12	200
42	12	62	12	77	12	109	12	140	12	171
48	12	54	12	68	12	95	12	122	12	150
54	12	48	12	60	12	84	12	109	12	133
60	12	43	12	54	12	76	12	98	12	120
66	13	39	12	49	12	69	12	89	12	109
72	14	36	13	45	12	63	12	81	12	100
78	16	33	14	41	12	58	12	75	12	92
84	17	31	15	38	13	54	12	70	12	85
90	18	29	16	36	14	50	12	65	12	80
96			17	34	15	47	13	61	12	75
102			18	32	15	44	14	57	13	70
108					16	42	14	54	14	66
114					17	40	15	51	15	63
120					18	38	16	49	15	60
126							17	46	16	57
132							17	44	17	54
138							18	42	18	52
144									18	50

SEE NOTE 1

NOTE 1: TABLE IS FOR PIPE WITH HELICAL LOCK SEAMS OR HELICAL WELDED SEAMS ONLY.

STRUCTURAL STEEL UNDERPASS
6" x 2" CORRUGATIONS

PIPE DIM. SPAN X RISE ft-inch	CORNER RADIUS inch	MIN. COVER inch	MIN. THICKNESS inch	MAX. FILL HEIGHT ft.
12-2 x 11-0	38	24	0.111	11
13-2 x 11-11	38	24	0.111	10
14-1 x 12-10	38	24	0.111	10
14-10x 13-5	38	24	0.111	10
15-9 x 15-1	38	24	0.111	7
16-5 x 16-1	38	24	0.140	7
17-3 x 17-0	47	36	0.140	9
19-2 x 17-2	47	36	0.170	7
20-4 x 17-9	47	36	0.188	6

REVISIONS

NO.	DATE	APPR.	REMARKS
1	08/25/05	B.A.	CHANGED FT TO INCH IN LEFT TOP TWO TABLES FOR MIN. COVER.

UTAH DEPARTMENT OF TRANSPORTATION
STANDARD DRAWINGS FOR ROAD AND BRIDGE CONSTRUCTION
SALT LAKE CITY, UTAH

RECOMMENDED FOR APPROVAL — AUG.25,2005 DATE
CHAIRMAN STANDARDS COMMITTEE
APPROVED — AUG.25,2005 DATE
DEPUTY DIRECTOR

STANDARD DRAWING TITLE
FILL HEIGHT FOR METAL PIPE (STEEL)

STD DWG
DG 1

DGN File:L:\Standard Drawings\Imperial\2005Approved\xChange4Approved\dg01.dgn
01-SEP-2005

CHECK DAMS

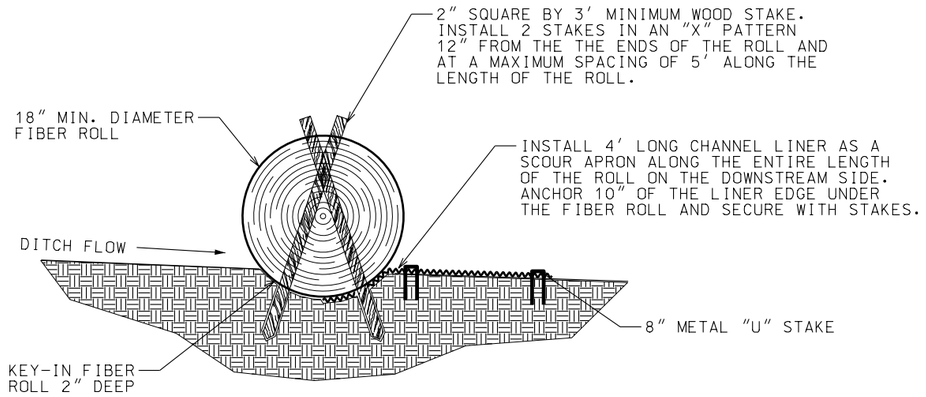

SECTION Y – Y

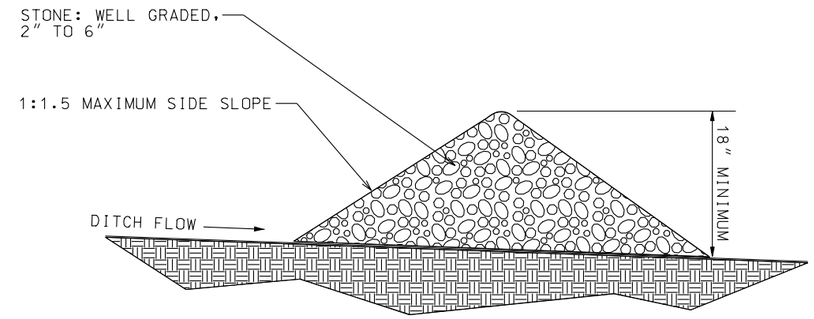

SECTION Z – Z

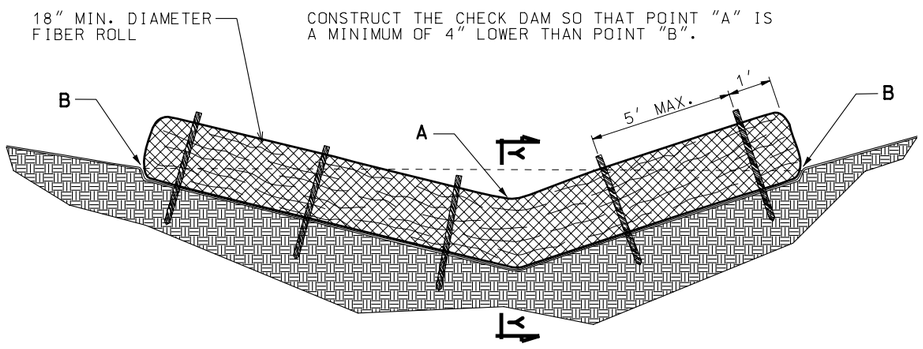

FIBER ROLL CHECK DAM

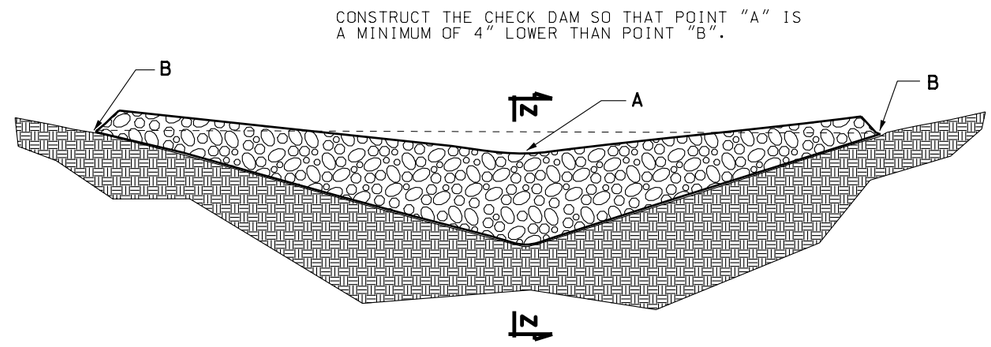

STONE CHECK DAM

MATERIAL QUANTITY CHART		
DITCH SIDE SLOPE	LENGTH OF FIBER ROLL REQUIRED FOR HALF OF DITCH	CUBIC YARDS OF STONE REQUIRED FOR HALF OF DITCH
2:1	4.5'	0.25
3:1	6'	0.35
4:1	8'	0.5
6:1	11.5'	0.7
8:1	15'	1.0
10:1	18.5'	1.2
12:1	22.5'	1.4

EXAMPLE: A CUT DITCH WITH A 6:1 FORE SLOPE AND A 2:1 BACK SLOPE WOULD REQUIRE A 16' MIN. FIBER ROLL OR 0.95 CUBIC YARDS MIN. OF STONE.

NOTES FOR CHECK DAMS:

1. PLACE A CHECK DAM AT EVERY TWO-FOOT DROP IN ELEVATION ALONG THE CUT DITCH.
2. A 9" TO 12" DIAMETER FIBER ROLL CAN BE USED IN PLACE OF THE 18" ROLL PROVIDED A ROLL IS INSTALLED AT EVERY ONE-FOOT DROP IN ELEVATION ALONG THE CUT DITCH.
3. PLACE CHECK DAMS PERPENDICULAR TO THE FLOW LINE OF THE DITCH.
4. DO NOT PLACE CHECK DAMS ACROSS NATURAL STREAM BEDS.
5. DO NOT USE STONE CHECK DAMS WITHIN CLEAR ZONES.
6. CONSTRUCT CHECK DAMS SO THAT WATER DOES NOT FLOW AROUND THE ENDS OF THE DAM.
7. REMOVE SEDIMENT AS IT ACCUMULATES AND PLACE IT IN A STABLE AREA APPROVED BY THE ENGINEER.
8. AFTER SURROUNDING AREAS HAVE BEEN SEEDED AND MULCHED, SPREAD ROCK FROM CHECK DAMS TO LINE THE CUT DITCH AND BREAK APART FIBER ROLLS AND SPREAD THE STRAW OVER SEEDED AREAS.

REVISIONS

NO.	DATE	APPR.	REMARKS
1	08/25/05	T.J.	REVISED ENTIRE DRAWING.

UTAH DEPARTMENT OF TRANSPORTATION
STANDARD DRAWINGS FOR ROAD AND BRIDGE CONSTRUCTION

RECOMMENDED FOR APPROVAL — AUG.25, 2005 DATE
CHAIRMAN STANDARDS COMMITTEE — AUG.25, 2005 DATE
APPROVED — DEPUTY DIRECTOR

TEMPORARY EROSION CONTROL (CHECK DAMS)
STANDARD DRAWING TITLE

STD DWG
EN 1

DGN File:L:\Standard_Drawings\Imperial\2005Approved\Change4Approved\EN01.dgn
01-SEP-2005

SILT FENCE

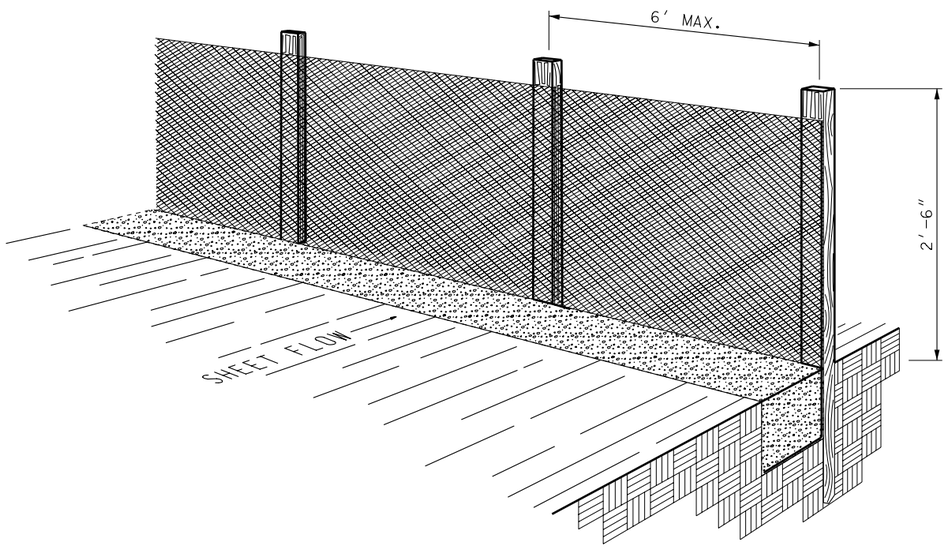

PERSPECTIVE VIEW

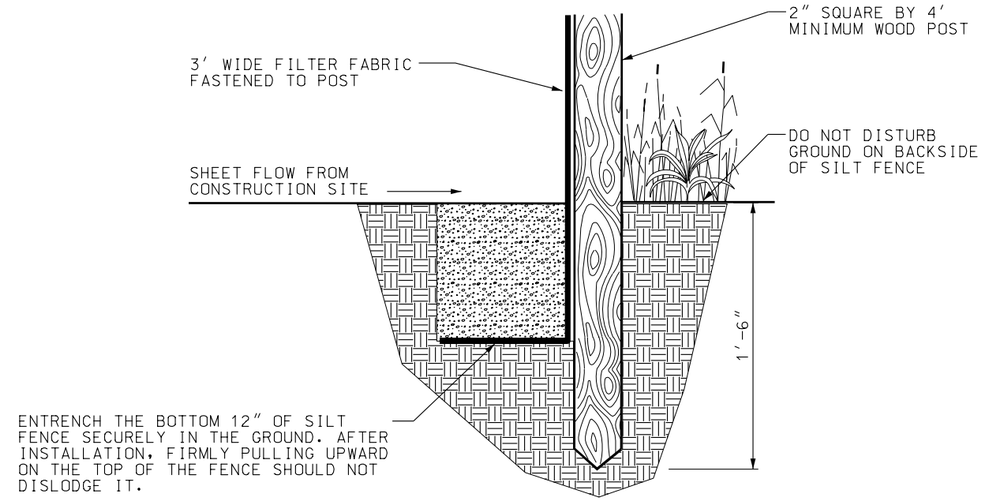

SECTION

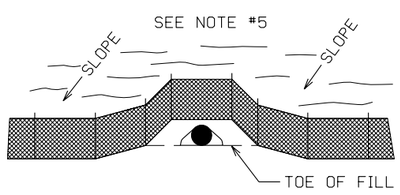

AROUND A PIPE OUTLET

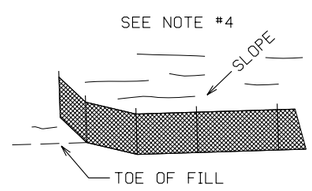

AT END OF SILT FENCE

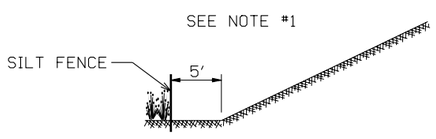

AT TOE OF FILL SLOPE

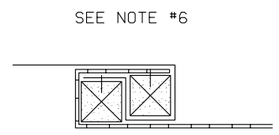

SPLICES (TOP VIEW)

SILT FENCE INSTALLATIONS

NOTES FOR SILT FENCE:

1. WHERE PERMITTED, POSITION THE SILT FENCE 5′ BEYOND THE TOE OF SLOPE.
2. TO AVOID CREATING LOW POINTS ALONG THE SILT FENCE, ALIGN THE FENCE ALONG THE CONTOUR AS MUCH AS POSSIBLE. WHERE EXCESSIVE RUNOFF WILL ACCUMULATE AT A LOW POINT, PROVIDE AN OPENING IN THE FENCE AND INSTALL A SEDIMENT TRAP.
3. WHEN EXCAVATING THE TRENCH, USE MACHINERY THAT WILL MINIMIZE DISTURBANCE.
4. TO PREVENT RUNOFF FROM FLOWING AROUND THE ENDS OF THE SILT FENCE, RUN THE ENDS OF THE FENCE UP SLOPE.
5. DO NOT PLACE SILT FENCE ACROSS POTENTIAL CONCENTRATED FLOWS (e.g., PIPE OUTLETS, DRAINAGE CHANNELS, CUT DITCHES).
6. AVOID USING SPLICES ALONG THE FENCE AS MUCH AS POSSIBLE. IF A SPLICE IS NECESSARY, BEFORE POUNDING IN THE END POSTS, OVERLAP THE END POSTS AND TWIST 180 DEGREES.
7. MAINTAIN A PROPERLY FUNCTIONING SILT FENCE THROUGHOUT THE DURATION OF THE PROJECT OR UNTIL DISTURBED AREAS HAVE BEEN VEGETATED.
8. WHEN A STORM EVENT DEPOSITS SEDIMENT BEHIND THE FENCE, REMOVE THE SEDIMENT AND PLACE IT IN A STABLE AREA APPROVED BY THE ENGINEER.
9. IN AREAS THAT HAVE BEEN SEEDED AND MULCHED, REMOVE SILT FENCE UNLESS THEY ARE PROTECTING A WETLAND OR WATER BODY.

REVISIONS

NO.	DATE	APPR.	REMARKS
1	08/25/05	T.J.	REVISED ENTIRE DRAWING.

UTAH DEPARTMENT OF TRANSPORTATION
STANDARD DRAWINGS FOR ROAD AND BRIDGE CONSTRUCTION
SALT LAKE CITY, UTAH

RECOMMENDED FOR APPROVAL — AUG.25, 2005 DATE
CHAIRMAN STANDARDS COMMITTEE — AUG.25, 2005 DATE
APPROVED — DEPUTY DIRECTOR

TEMPORARY EROSION CONTROL (SILT FENCE)

STANDARD DRAWING TITLE

STD DWG
EN 2

DGN File:L:\Standard Drawings\Imperial\2005Approved\Approved\Change4\EN02.dgn
01-SEP-2005

SLOPE DRAIN AND TEMPORARY BERM

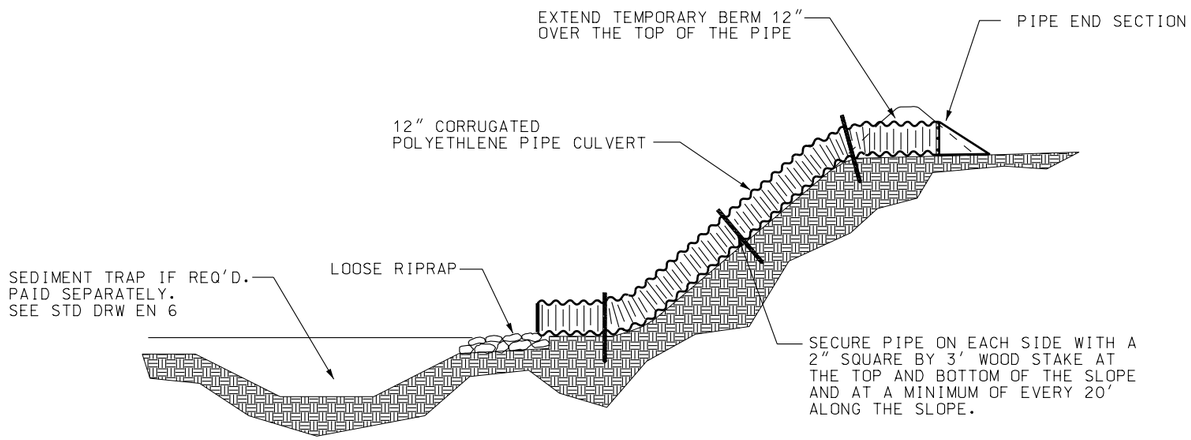

SLOPE DRAIN SECTION

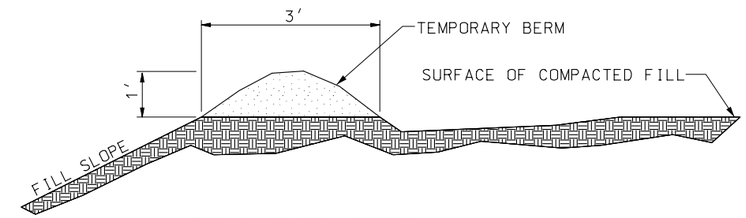

TEMPORARY BERM

NOTES FOR TEMPORARY BERM:

1. COMPACT THE RIDGE OF EXISTING SOIL TO PROVIDE A NON-ERODIBLE BERM THAT DIVERTS STORM RUNOFF FROM RECENTLY CONSTRUCTED SLOPES. REPAIR ANY EROSION OF THE BERM IMMEDIATELY.
2. TEMPORARY BERMS ARE TYPICALLY USED IN CONJUCNCTION WITH SLOPE DRAINS.

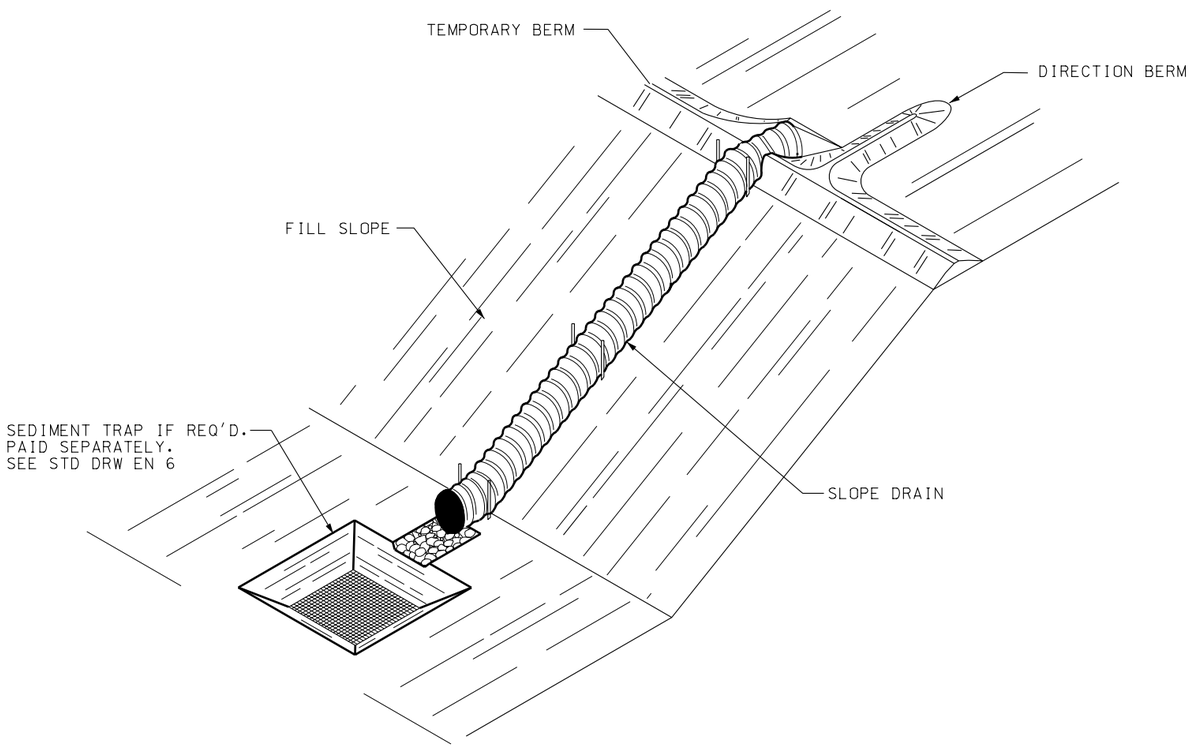

SLOPE DRAIN ISOMETRIC

NOTES FOR SLOPE DRAIN:

1. COMPACT THE SOIL SURFACE AND BERMS AROUND THE ENTRANCE TO THE PIPE END SECTION TO PREVENT WATER FROM UNDERMINING THE PIPE AND ERODING THE SLOPE. REPAIR ANY EROSION AROUND THE INLET, OUTLET OR SLOPE IMMEDIATELY.
2. SECURE THE PIPE TO THE GROUND EVERY 20′ TO PREVENT PIPE MOVEMENT AND SUBSEQUENT FAILURES DURING STORM EVENTS.
3. USE WATER-TIGHT FITTINGS AT ALL SLOPE DRAIN CONNECTIONS.
4. EXTEND THE SLOPE DRAIN AS REQUIRED TO COINCIDE WITH THE HEIGHT OF THE EMBANKMENT.
5. EXTEND THE DRAIN A MINIMUM OF 3′ BEYOND THE TOE OF THE SLOPE AND PROVIDE OUTLET PROTECTION.
6. 50 PERCENT OF THE RIPRAP TO BE BETWEEN 6″ AND 8″ WITH A MAXIMUM SIZE OF 12″ AND A MINIMUM SIZE OF 4″.
7. IF A SEDIMENT TRAP CANNOT BE CONSTRUCTED AT THE PIPE OUTLET PROVIDE A SEDIMENT TRAPPING DEVICE BEFORE THE PIPE INLET.
8. MAINTAIN SLOPE DRAINS UNTIL SLOPES HAVE BEEN PERMANENTLY STABILIZED. REMOVE SLOPE DRAINS AS DIRECTED BY ENGINEER.

REVISIONS

NO.	DATE	APPR.	REMARKS
1	08/25/05	T.J.	REVISED ENTIRE DRAWING.

UTAH DEPARTMENT OF TRANSPORTATION
STANDARD DRAWINGS FOR ROAD AND BRIDGE CONSTRUCTION
SALT LAKE CITY, UTAH

RECOMMENDED FOR APPROVAL — AUG.25, 2005 DATE
CHAIRMAN STANDARDS COMMITTEE
APPROVED — AUG.25, 2005 DATE
DEPUTY DIRECTOR

TEMPORARY EROSION CONTROL (SLOPE DRAIN AND TEMPORARY BERM)

STANDARD DRAWING TITLE

STD DWG
EN 3

DGN File:L:\Standard Drawings\Imperial\2005Approved\Change4Approved\EN03.dgn
01-SEP-2005

DROP INLET BARRIERS

FIBER ROLL DROP INLET BARRIER

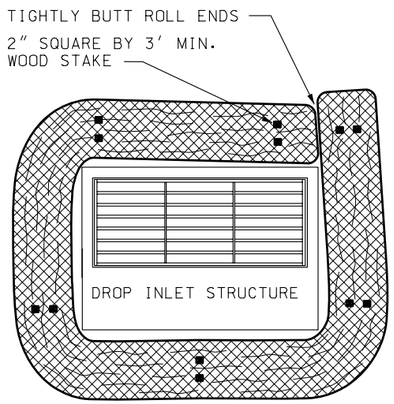

PLAN VIEW

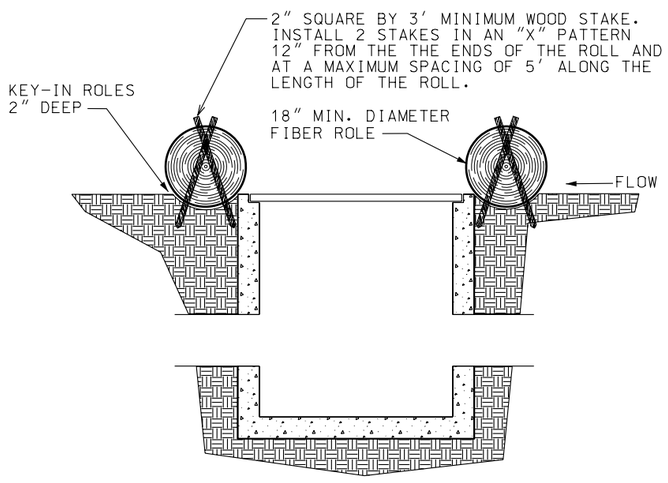

SECTION

NOTES:

1. KEY-IN FIBER ROLLS 2" DEEP AROUND THE PERIMETER OF THE DROP INLET STRUCTURE AND STAKE AS SHOWN.
2. OVERLAP THE ENDS OF THE FIBER ROLL AT LEAST 18".
3. IN MEDIAN AREAS, CONSTRUCT SO THAT THE TOPS OF THE ROLLS ARE NOT HIGHER THAN THE ADJACENT ROADWAY.
4. MAINTAIN A PROPERLY FUNCTIONING FIBER LOG BARRIER THROUGHOUT CONSTRUCTION OR UNTIL DISTURBED AREAS CONTRIBUTING TO THE INLET HAVE BEEN PAVED OR VEGETATED.
5. REMOVE SEDIMENT AS IT ACCUMULATES AND PLACE IT IN A STABLE AREA APPROVED BY THE ENGINEER.

SILT FENCE DROP INLET BARRIER

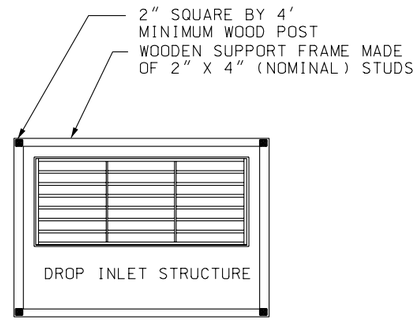

PLAN VIEW

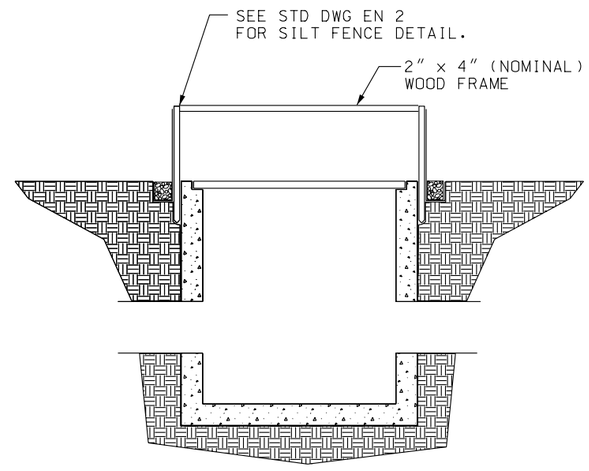

SECTION

NOTES:

1. ENTRENCH THE BOTTOM 18" OF SILT FENCE SECURELY IN THE GROUND AROUND THE PERIMETER OF THE DROP INLET.
2. DRIVE POSTS AT EACH CORNER OF THE INLET STRUCTURE. IF THE DISTANCE BETWEEN CORNER POSTS EXCEEDS 4', PLACE ANOTHER POST(S) BETWEEN THEM.
3. CROSS-BRACE THE TOPS OF ALL POSTS WITH A WOODEN FRAME MADE OF 2X4 STUDS. USE NAILS OR SCREWS FOR FASTENING.
4. IN MEDIAN AREAS, CONSTRUCT SO THAT THE TOP OF THE SILT FENCE IS NOT HIGHER THAN THE ADJACENT ROADWAY.
5. MAINTAIN A PROPERLY FUNCTIONING SILT FENCE BARRIER THROUGHOUT CONSTRUCTION OR UNTIL DISTURBED AREAS CONTRIBUTING TO THE INLET HAVE BEEN PAVED OR VEGETATED.
6. REMOVE SEDIMENT AS IT ACCUMULATES AND PLACE IT IN A STABLE AREA APPROVED BY THE ENGINEER.

STONE DROP INLET BARRIER

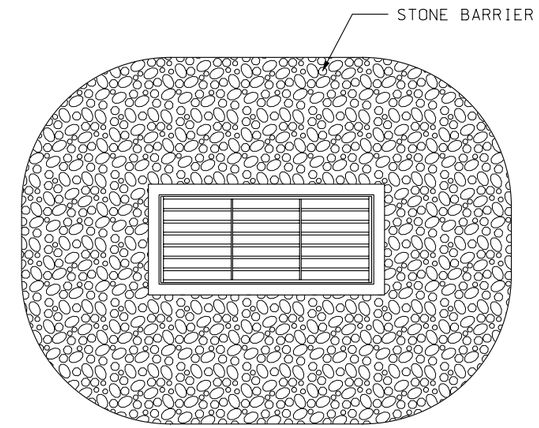

PLAN VIEW

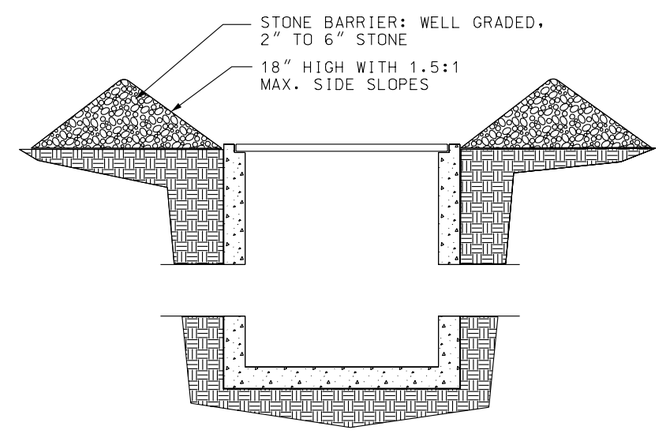

SECTION

NOTES:

1. PLACE STONE BARRIER AS SHOWN AROUND THE INLET OPENING.
2. DO NOT USE STONE BARRIERS WITHIN THE CLEAR ZONE. INSTEAD USE THE FIBER ROLL OR SILT FENCE BARRIER.
3. IN MEDIAN AREAS, CONSTRUCT SO THAT THE TOP OF THE STONE BARRIER IS NOT HIGHER THAN THE ADJACENT ROADWAY.
4. MAINTAIN A PROPERLY FUNCTIONING STONE BARRIER THROUGHOUT CONSTRUCTION OR UNTIL DISTURBED AREAS CONTRIBUTING TO THE INLET HAVE BEEN PAVED OR VEGETATED.
5. REMOVE SEDIMENT AS IT ACCUMULATES AND PLACE IT IN A STABLE AREA APPROVED BY THE ENGINEER.

REVISIONS

NO.	DATE	APPR.	REMARKS
1	08/25/05	T.J.	REVISED ENTIRE DRAWING.

UTAH DEPARTMENT OF TRANSPORTATION
STANDARD DRAWINGS FOR ROAD AND BRIDGE CONSTRUCTION
SALT LAKE CITY, UTAH

RECOMMENDED FOR APPROVAL — AUG.25, 2005 DATE
CHAIRMAN STANDARDS COMMITTEE APPROVED — AUG.25, 2005 DATE
DEPUTY DIRECTOR

TEMPORARY EROSION CONTROL (DROP INLET BARRIERS)
STANDARD DRAWING TITLE

STD DWG
EN 4

DGN File:L:\Standard_Drawings\Imperial\2005Approved\Change4Approved\EN04.dgn
01-SEP-2005

PIPE INLET BARRIER

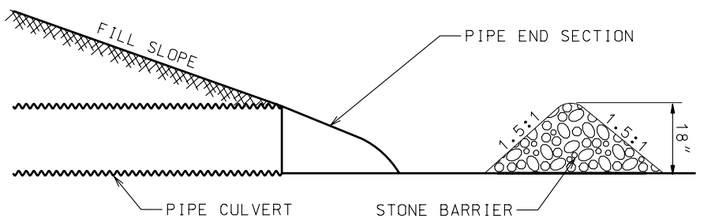

SECTION A-A

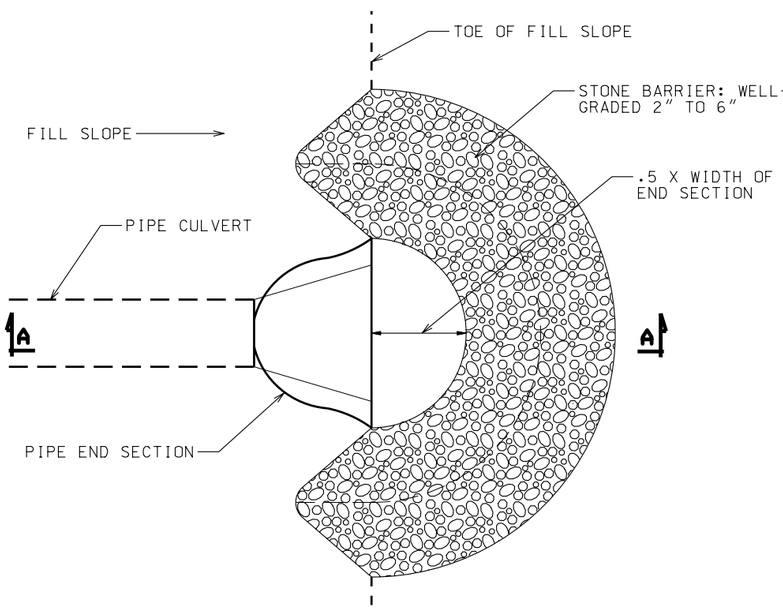

PLAN VIEW

NOTES FOR PIPE INLET BARRIER:

1. PLACE PIPE INLET BARRIERS AT LOCATIONS SHOWN ON THE PLANS OR AS DIRECTED BY THE ENGINEER.
2. MAINTAIN A PROPERLY FUNCTIONING SEDIMENT BARRIER THROUGHOUT CONSTRUCTION.
3. REMOVE SEDIMENT AS IT ACCUMULATES AND PLACE IT IN A STABLE AREA APPROVED BY THE ENGINEER.
4. WHEN SURROUNDING AREAS HAVE BEEN SEEDED AND MULCHED, REMOVE THE STONE BARRIER BY SPREADING THE STONE ALONG THE CUT DITCH.
5. AN 18" MINIMUM DIAMETER FIBER ROLL MAY BE USED AS A SUBSTITUTE FOR THE STONE BARRIER. STAKE AS SHOWN ON STD DRW EN 1.

CURB INLET BARRIER

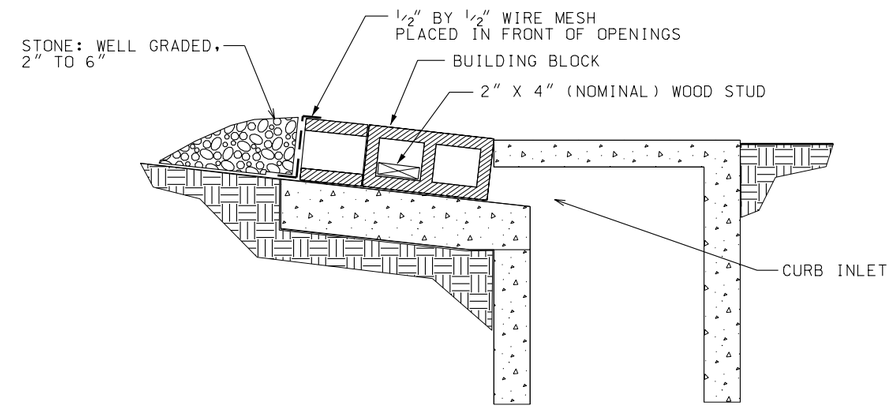

SECTION B-B

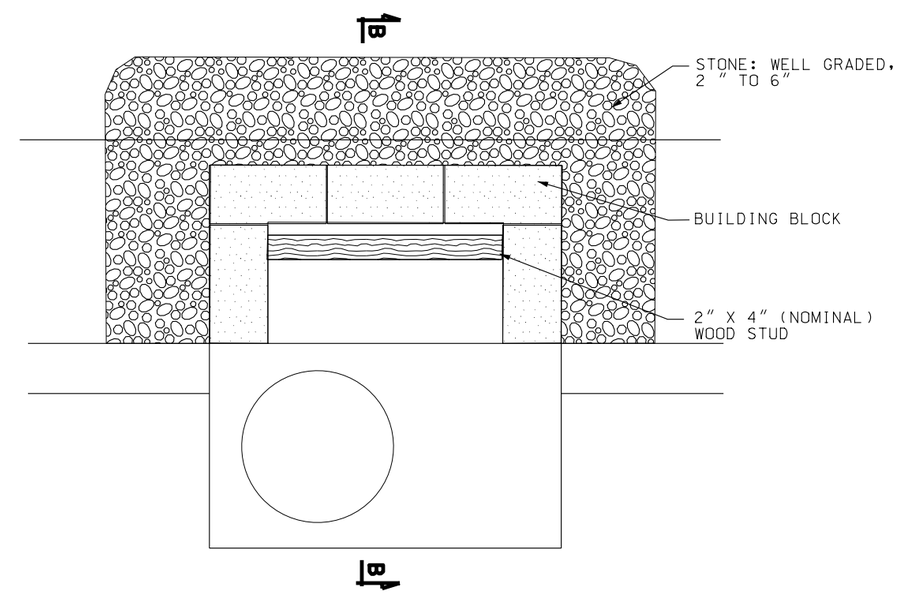

PLAN VIEW

NOTES FOR CURB INLET BARRIER:

1. PLACE BUILDING BLOCKS, WIRE MESH AND STONE AS SHOWN AROUND THE CURB INLETS.
2. MAINTAIN A PROPERLY FUNCTIONING STONE BARRIER THROUGHOUT CONSTRUCTION OR UNTIL DISTURBED AREAS CONTRIBUTING TO THE INLET HAVE BEEN PAVED OR VEGETATED.
3. REMOVE SEDIMENT AS IT ACCUMULATES AND PLACE IT IN A STABLE AREA APPROVED BY THE ENGINEER.

REVISIONS

NO.	DATE	APPR.	REMARKS
1	08/25/05	T.J.	REVISED ENTIRE DRAWING. TITLE CHANGED.

UTAH DEPARTMENT OF TRANSPORTATION
STANDARD DRAWINGS FOR ROAD AND BRIDGE CONSTRUCTION
SALT LAKE CITY, UTAH

RECOMMENDED FOR APPROVAL — AUG.25, 2005 DATE
CHAIRMAN STANDARDS COMMITTEE APPROVED — AUG.25, 2005 DATE
DEPUTY DIRECTOR

TEMPORARY EROSION CONTROL (PIPE INLET AND CURB INLET BARRIERS)
STANDARD DRAWING TITLE

STD DWG
EN 5

01-SEP-2005 DGN File:L:\Standard Drawings\Imperial\2005Approved\xChange4Approved\EN05.dgn

SEDIMENT TRAP

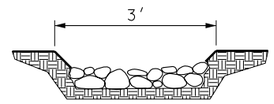

SECTION A-A

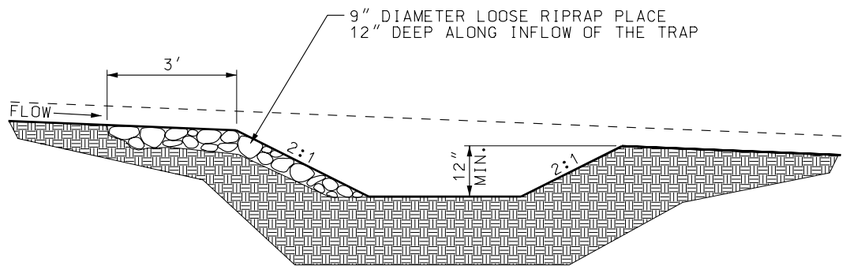

SECTION B-B

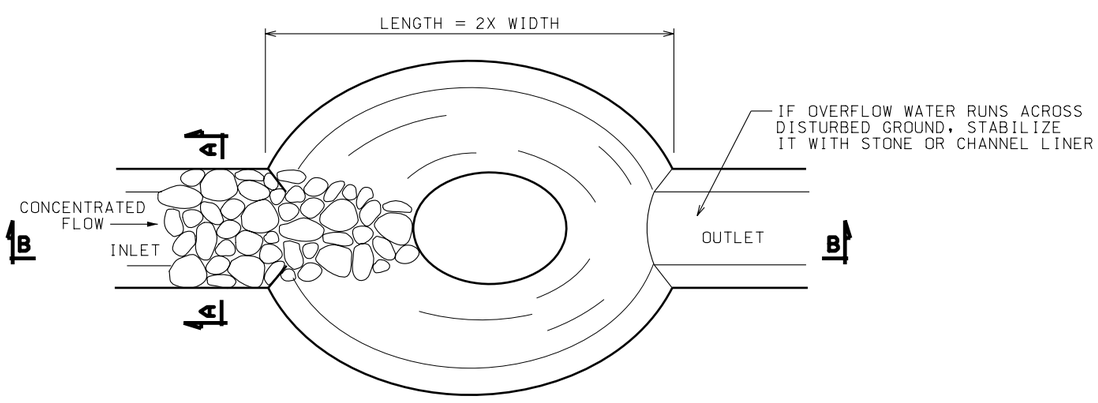

PLAN VIEW

NOTES FOR SEDIMENT TRAPS:

1. PLACE SEDIMENT TRAPS AT LOCATIONS SHOWN ON THE PLANS OR AS DIRECTED BY THE ENGINEER.
2. IDENTIFY THE STORAGE CAPACITY OF EACH SEDIMENT TRAP IN THE PROJECT PLAN SET.
3. CONSTRUCT TRAP LENGTH TWICE AS LONG AS THE WIDTH.
4. MAINTAIN A PROPERLY FUNCTIONING SEDIMENT TRAP THROUGHOUT CONSTRUCTION OR UNTIL DISTURBED AREAS CONTRIBUTING TO THE BASIN HAVE BEEN PAVED OR SEEDED AND MULCHED.
5. REMOVE SEDIMENT AS IT ACCUMULATES AND PLACE IT IN A STABLE AREA APPROVED BY THE ENGINEER.

STABILIZED CONSTRUCTION ENTRANCE

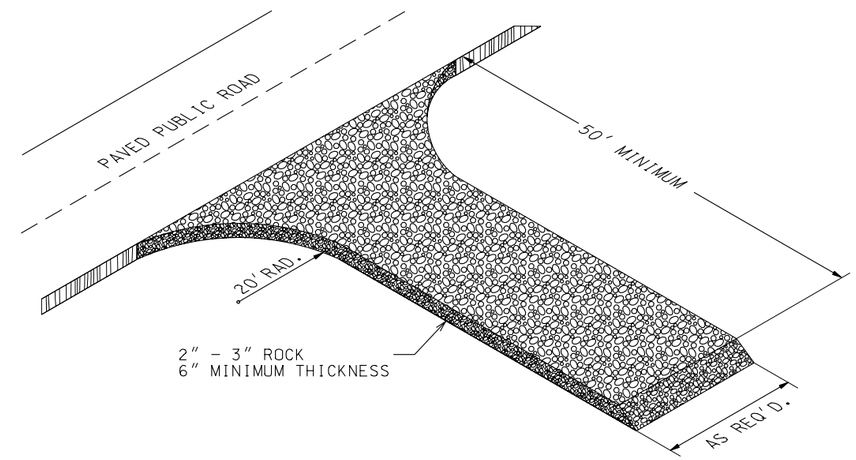

NOTES FOR STABILIZED CONSTRUCTION ENTRANCE:

1. PLACE STABILIZED CONSTRUCTION ENTRANCES AT LOCATIONS SHOWN ON THE PLANS OR AS DIRECTED BY THE ENGINEER.
2. MAINTAIN A PROPERLY FUNCTIONING CONSTRUCTION ENTRANCE THROUGHOUT CONSTRUCTION OR UNTIL DISTURBED AREAS HAVE BEEN PAVED.
3. DO NOT ALLOW VEHICLES LEAVING THE CONSTRUCTION SITE TO TRACK MUD ONTO PAVED ROADS.

REVISIONS

NO.	DATE	APPR.	REMARKS
1	08/25/05	T.J.	NEW DRAWING.

UTAH DEPARTMENT OF TRANSPORTATION
STANDARD DRAWINGS FOR ROAD AND BRIDGE CONSTRUCTION
SALT LAKE CITY, UTAH

RECOMMENDED FOR APPROVAL — AUG.25, 2005 DATE
CHAIRMAN STANDARDS COMMITTEE APPROVED — AUG.25, 2005 DATE
DEPUTY DIRECTOR

TEMPORARY EROSION CONTROL (SEDIMENT TRAP AND STABILIZED CONSTRUCTION ENTRANCE)
STANDARD DRAWING TITLE

STD DWG
EN 6

DGN Files:L:\Standard.Drawings\Imperial\2005Approved\xChange4Approved\en06.dgn
01-SEP-2005

STRAW BALE BARRIER

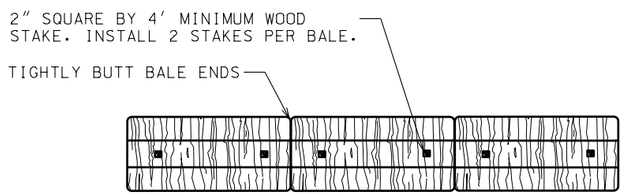

PLAN VIEW

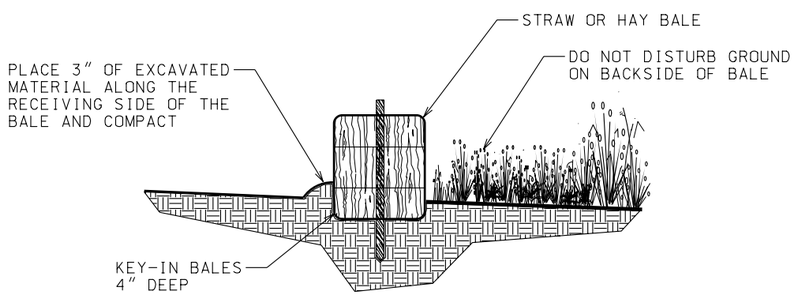

SECTION

NOTES FOR STRAW BALE BARRIER:

1. PLACE STRAW BALE BARRIERS BEFORE BEGINNING EARTH DISTURBING ACTIVITIES.
2. DO NOT PLACE STRAW BALE BARRIERS ACROSS NATURAL STREAM BEDS.
3. MAINTAIN A PROPERLY FUNCTIONING STRAW BALE BARRIER THROUGHOUT THE DURATION OF THE PROJECT OR UNTIL DISTURBED AREAS HAVE BEEN SEEDED AND MULCHED.
4. AFTER SURROUNDING AREAS HAVE BEEN STABILIZED, REMOVE BALES AND STAKES AND LEVEL AND SEED THE AREA. BALES MAY BE BUSTED APART AND SPREAD AS MULCH.

REVISIONS

NO.	DATE	APPR.	REMARKS
1	08/25/05	T.J.	NEW DRAWING.

UTAH DEPARTMENT OF TRANSPORTATION
STANDARD DRAWINGS FOR ROAD AND BRIDGE CONSTRUCTION
SALT LAKE CITY, UTAH

RECOMMENDED FOR APPROVAL — AUG.25, 2005 DATE
CHAIRMAN STANDARDS COMMITTEE — AUG.25, 2005 DATE
APPROVED
DEPUTY DIRECTOR

TEMPORARY EROSION CONTROL (STRAW BALE BARRIER)
STANDARD DRAWING TITLE

STD DWG
EN 7

DGN Files:L:\Standard Drawings\Imperial\2005Approved\xChange4Approved\en07.dgn
01-SEP-2005

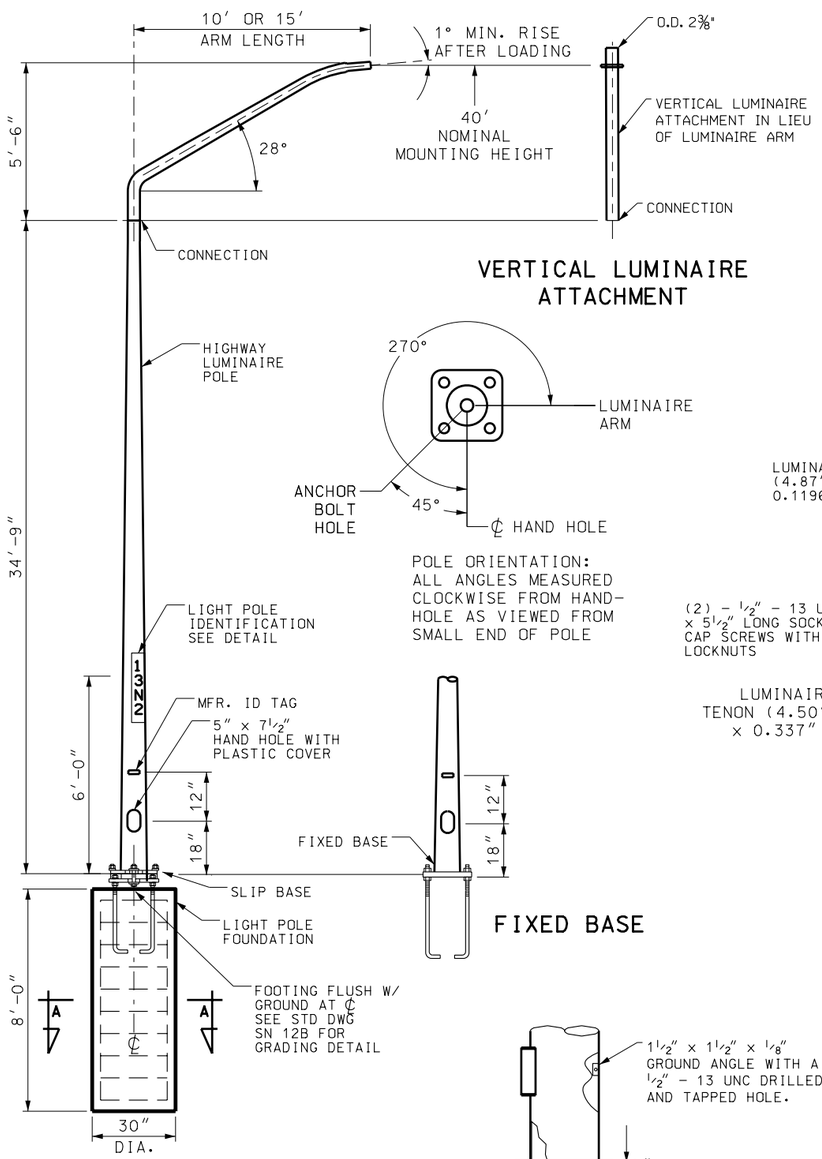

VERTICAL LUMINAIRE ATTACHMENT

SLIP BASE

SECTION A-A
REINFORCEMENT

FIXED BASE

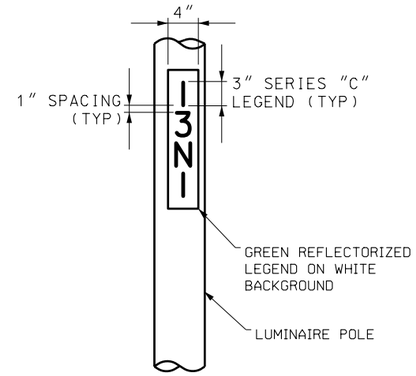

LUMINAIRE POLE
IDENTIFICATION DETAIL

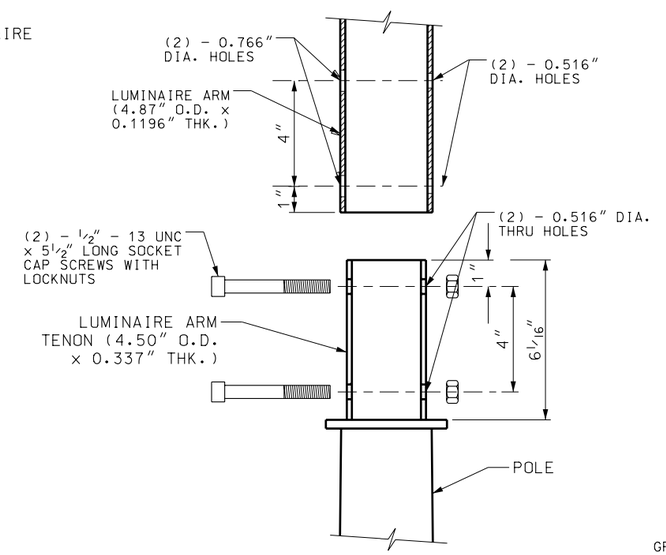

LUMINAIRE ARM/ATTACHMENT
CONNECTION

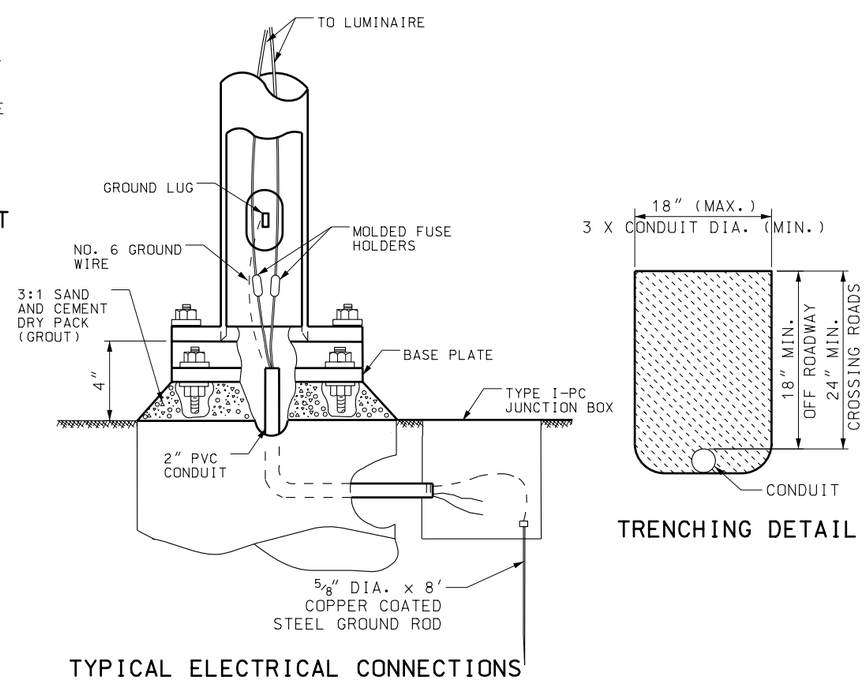

TRENCHING DETAIL

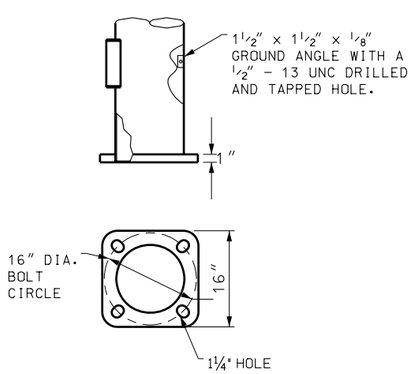

FIXED BASE PLATE DETAIL

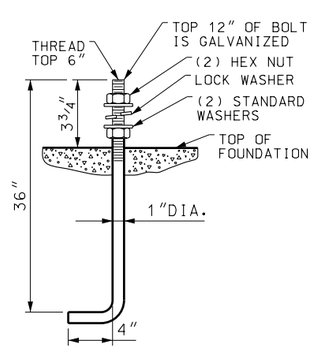

ANCHOR BOLT

NOTES:

1. LIGHT POLE ASSEMBLY CONSISTS OF A POLE, ARM, BASE, INTERNAL CONDUCTORS, IDENTIFICATION, SPLICES, MOLDED CONNECTORS, FUSE HOLDERS, ANCHOR BOLTS, HARDWARE AND SLIP BASE OR FIXED BASE.
2. LIGHT POLE WITH BASE, LUMINAIRE ARM OR VERTICAL ATTACHMENT, ANCHOR BOLTS, AND RELATED HARDWARE ARE STATE FURNISHED ITEMS.
3. ALL STEEL MATERIALS INCLUDING ANCHOR BOLT THREADS ARE HOT-DIPPED GALVANIZED. AVOID DAMAGING THE GALVANIZED FINISH OF MATERIALS DURING TRANSPORT AND PLACEMENT.
4. ORIENT ALL ARM EXTENSIONS AT RIGHT ANGLES TO THE SURVEY LINE OF ROADWAY.
5. CENTER SHAFT TOP OVER CENTER OF FOUNDATION AFTER ARM EXTENSION, LUMINAIRE AND ALL ELECTRICAL ACCESSORIES ARE IN PLACE.
6. LOCATE LIGHT POLE BEHIND SIGNS WHEN THERE IS CONFLICT.
7. USE EPOXY COATED REBARS AND CLASS AA(AE) CONCRETE FOR ALL FOUNDATIONS.
8. USE BREAKAWAY BASE ON ALL LIGHT POLES EXCEPT THOSE LOCATED ON STRUCTURES OR SPECIFIED ON PLANS. SEE STD DWG SL 15 FOR BREAKAWAY BASE DETAILS.

STATE FURNISHED ITEMS

ITEM	CONTENTS
SLIP BASE HIGHWAY LUMINAIRE POLE WITH HARDWARE KIT	SLIP BASE LUMINAIRE POLE, SLIP BASE ASSEMBLY, KEEPER PLATE, PLATE WASHERS, PLASTIC HANDHOLE COVER, CONNECTION BOLTS, WASHERS, AND NUTS
FIXED BASE HIGHWAY LUMINAIRE POLE WITH HARDWARE KIT	FIXED BASE LUMINAIRE POLE, PLASTIC HANDHOLE COVER, CONNECTION BOLTS, WASHERS, AND NUTS.
LUMINAIRE ARM OR VERTICAL ATTACHMENT	LUMINAIRE ARM OR VERTICAL ATTACHMENT
1″ DIA. x 36″ ANCHOR BOLT WITH HARDWARE	ANCHOR BOLT, WASHERS, AND NUTS.

REVISIONS

NO.	DATE	APPR.	REMARKS
1	8/25/05	LJM	UPDATED BOLT CIRCLE FOR FIXED BASE PLATE DETAIL. UPDATED NOTE ON FOUNDATION DETAIL.

UTAH DEPARTMENT OF TRANSPORTATION
STANDARD DRAWINGS FOR ROAD AND BRIDGE CONSTRUCTION
SALT LAKE CITY, UTAH

RECOMMENDED FOR APPROVAL — AUG.25,2005 DATE
CHAIRMAN STANDARDS COMMITTEE
APPROVED — AUG.25,2005 DATE
DEPUTY DIRECTOR

HIGHWAY LUMINAIRE
POLE GROUND MOUNT
STANDARD DRAWING TITLE

STD DWG
SL 14

DGN File:L:\Standard Drawings\Imperial\2005\Approved\Change4\approved\sl14.dgn
01-SEP-2005

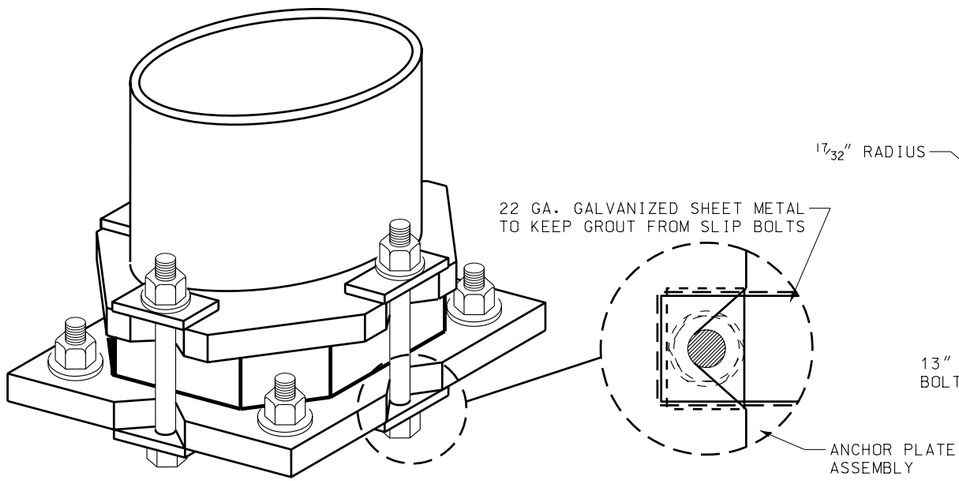

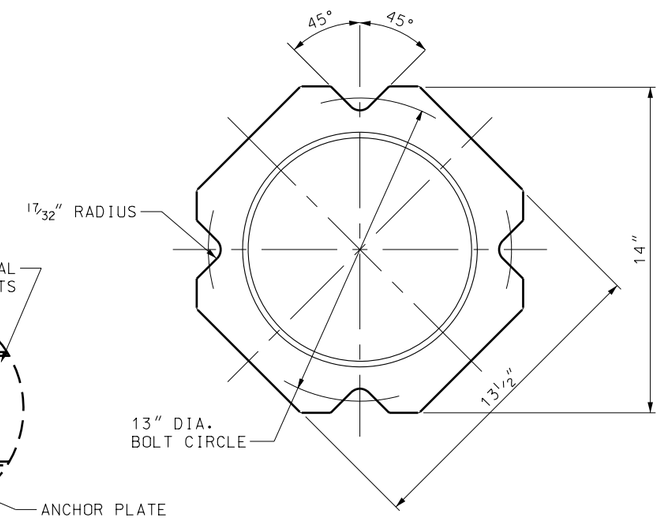

POLE BASE PLATE

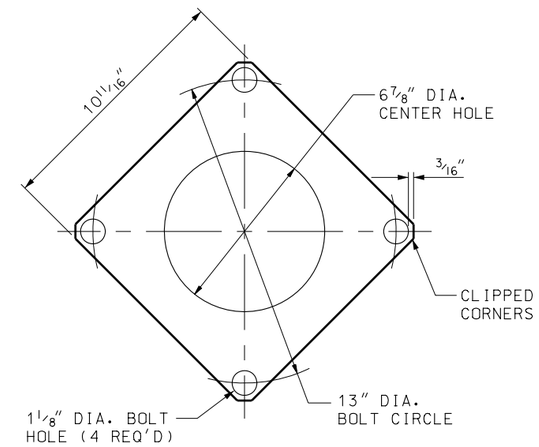

KEEPER PLATE

(28 GAUGE STAINLESS STEEL)

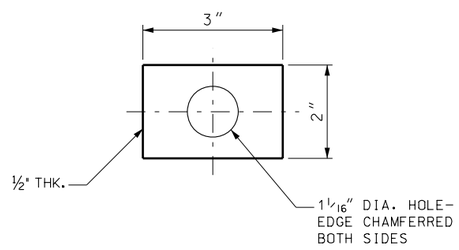

PLATE WASHER

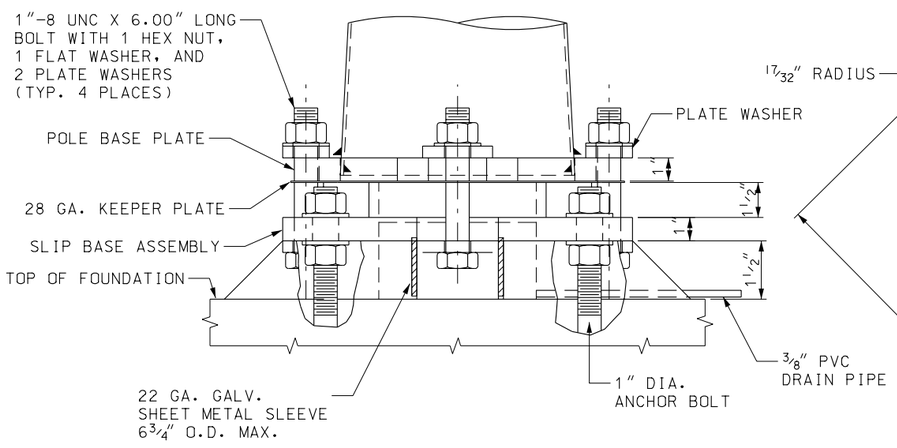

SLIP BASE DETAIL

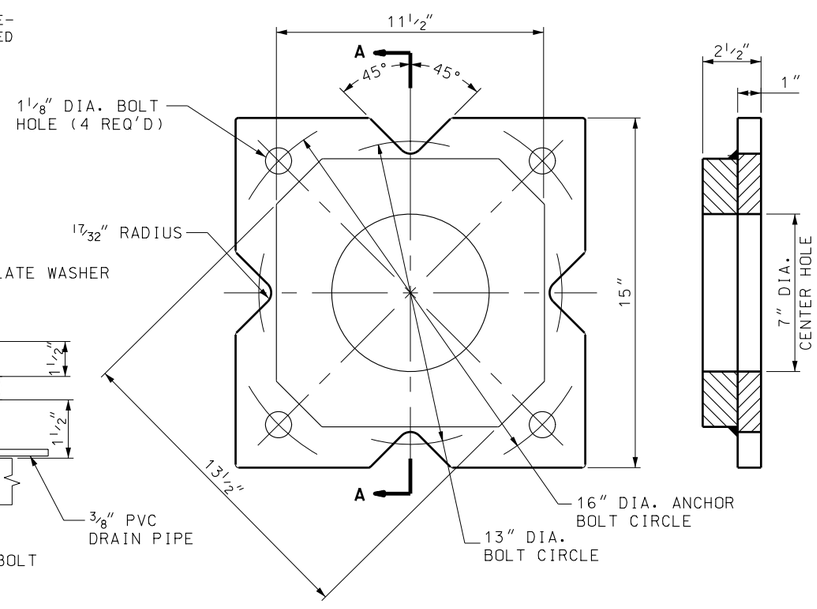

SLIP BASE ASSEMBLY

SECTION A – A

NOTES:

1. PLACE ANCHOR PLATE ASSEMBLY ON ANCHOR BOLT LEVELING NUTS AND SECURE IN PLACE.
2. ERECT LIGHT POLE AND SECURE WITH 1 INCH DIA. HIGH STRENGTH BOLTS. INSTALL BOLTS IN THE SLOTS SO THE BOLT SHANKS ARE IN CONTACT WITH THE LIGHT POLE PLATE AND ANCHOR PLATE ASSEMBLY.
3. ALL STEEL MATERIALS INCLUDING AHCHOR BOLT THREADS ARE HOT-DIPPED GALVANIZED. AVOID DAMAGING THE GALVANIZED FINISH OF MATERIALS DURING TRANSPORT AND PLACEMENT.
4. TORQUE ALL SLIP BOLTS TO 80 FT LBS, RELEASE AND RETORQUE TO 70 FT LBS.
5. INSTALL DRY PACK GROUT AFTER LIGHT POLE IS PLACED IN FINAL POSITION.

REVISIONS

NO.	DATE	APPR.	REMARKS
1	8/25/05	LJM	UPDATED SLIP BASE ASSEMBLY DETAIL.

UTAH DEPARTMENT OF TRANSPORTATION
STANDARD DRAWINGS FOR ROAD AND BRIDGE CONSTRUCTION
SALT LAKE CITY, UTAH

RECOMMENDED FOR APPROVAL — AUG.25,2005 DATE
CHAIRMAN STANDARDS COMMITTEE
APPROVED — AUG.25,2005 DATE
DEPUTY DIRECTOR

LUMINAIRE
SLIP BASE
DETAILS

STANDARD DRAWING TITLE

STD DWG
SL 15

DGN File:L:\Standard Drawings\Imperial\2005\Approved\Change4Approved\SL15.dgn
01-SEP-2005

HORIZONTAL SIGN DIMENSION (W)

VERTICAL SIGN DIMENSION (V)	ONE POST PER SIGN					TWO POSTS PER SIGN											THREE POSTS PER SIGN							
	1'-0"	2'-0"	3'-0"	4'-0"	5'-0"	6'-0"	7'-0"	8'-0"	9'-0"	10'-0"	11'-0"	12'-0"	13'-0"	14'-0"	15'-0"	16'-0"	17'-0"	18'-0"	19'-0"	20'-0"	21'-0"	22'-0"	23'-0"	24'-0"
1'-0"	3"Ø 3'-0"	3"Ø 3'-0"	3"Ø 3'-0"	3"Ø 3'-0"	3"Ø 3'-0"	S3X5.7 3'-0"	S3X5.7 3'-0"	S3X5.7 3'-0"	S3X5.7 3'-0"	S3X5.7 3'-0"	S3X5.7 3'-0"	S3X5.7 3'-0"	S3X5.7 3'-0"	S3X5.7 3'-0"	S3X5.7 3'-0"	S3X5.7 3'-0"	S3X5.7 3'-0"	S3X5.7 3'-0"	S3X5.7 3'-0"	S3X5.7 3'-0"	S3X5.7 3'-0"	S3X5.7 3'-0"	S3X5.7 3'-0"	S3X5.7 3'-0"
1'-6"	3"Ø 3'-0"	3"Ø 3'-0"	3"Ø 3'-0"	3"Ø 3'-0"	3"Ø 3'-0"	S3X5.7 3'-0"	S3X5.7 3'-0"	S3X5.7 3'-0"	S3X5.7 3'-0"	S3X5.7 3'-0"	S3X5.7 3'-0"	S3X5.7 3'-0"	S3X5.7 3'-0"	S3X5.7 3'-0"	S4X9.5 3'-0"	S4X9.5 3'-0"	S3X5.7 3'-0"	S3X5.7 3'-0"	S3X5.7 3'-0"	S3X5.7 3'-0"	S4X9.5 3'-0"	S4X9.5 3'-0"	S4X9.5 3'-0"	S4X9.5 3'-0"
2'-0"	3"Ø 3'-0"	3"Ø 3'-0"	3"Ø 3'-0"	3"Ø 3'-0"	3"Ø 3'-0"	S3X5.7 3'-0"	S3X5.7 3'-0"	S3X5.7 3'-0"	S3X5.7 3'-0"	S3X5.7 3'-0"	S4X9.5 3'-0"	S4X9.5 3'-0"	S4X9.5 3'-0"	S4X9.5 3'-0"	S4X9.5 3'-0"	S4X9.5 3'-0"	S4X9.5 3'-0"	S4X9.5 3'-0"	S4X9.5 3'-0"	S4X9.5 3'-0"	S4X9.5 3'-0"	S4X9.5 3'-0"	S4X9.5 3'-0"	S4X9.5 3'-0"
2'-6"	3"Ø/ 3'-0"	3"Ø 3'-0"	3"Ø 3'-0"	3"Ø 3'-0"	3"Ø 3'-0"	S3X5.7 3'-0"	S3X5.7 3'-0"	S3X5.7 3'-0"	S4X9.5 3'-0"	S4X9.5 3'-0"	S4X9.5 3'-0"	S4X9.5 3'-0"	S4X9.5 3'-0"	S4X9.5 3'-0"	S4X9.5 3'-0"	S4X9.5 3'-0"	S4X9.5 3'-0"	S4X9.5 3'-0"	S4X9.5 3'-0"	S4X9.5 3'-0"	S4X9.5 3'-0"	S4X9.5 3'-0"	S6X12.5 3'-0"	S6X12.5 3'-0"
3'-0"	3"Ø 3'-0"	3"Ø 3'-0"	3"Ø 3'-0"	3"Ø 3'-0"	4"Ø 3'-0"	S3X5.7 3'-0"	S3X5.7 3'-0"	S4X9.5 3'-0"	S4X9.5 3'-0"	S4X9.5 3'-0"	S4X9.5 3'-0"	S4X9.5 3'-0"	S4X9.5 3'-0"	S6X12.5 3'-6"	S6X12.5 3'-0"	S6X12.5 3'-0"	S4X9.5 3'-0"	S4X9.5 3'-0"	S4X9.5 3'-0"	S6X12.5 3'-6"	S6X12.5 3'-6"	S6X12.5 3'-6"	S6X12.5 3'-6"	S6X12.5 3'-0"
4'-0"	3"Ø 3'-0"	3"Ø 3'-0"	3"Ø 3'-6"	4"Ø 3'-6"	4"Ø 3'-6"	S4X9.5 3'-6"	S4X9.5 3'-6"	S4X9.5 3'-6"	S4X9.5 4'-0"	S4X9.5 3'-6"	S6X12.5 3'-6"	S6X12.5 3'-6"	S6X12.5 3'-0"	S6X12.5 3'-6"	S6X12.5 3'-6"	S6X12.5 3'-6"	S6X12.5 3'-6"	S6X12.5 3'-6"	S6X12.5 3'-0"	S6X12.5 3'-6"	S6X12.5 3'-6"	S6X12.5 3'-6"	S6X12.5 3'-6"	S6X12.5 3'-6"
5'-0"	3"Ø 3'-0"	3"Ø 3'-0"	4"Ø 3'-6"	4"Ø 3'-6"	5"Ø 3'-6"	S4X9.5 3'-6"	S4X9.5 4'-0"	S4X9.5 4'-0"	S6X12.5 4'-6"	S6X12.5 4'-0"	S6X12.5 3'-0"	S6X12.5 3'-6"	S6X12.5 3'-6"	S6X12.5 3'-6"	S6X12.5 4'-0"	S6X12.5 4'-0"	S6X12.5 3'-6"	S6X12.5 3'-6"	S6X12.5 3'-6"	S6X12.5 3'-6"	S6X12.5 4'-0"	S6X12.5 4'-0"	S6X12.5 4'-0"	S6X17.5 4'-0"
6'-0"	3"Ø 3'-0"	4"Ø 3'-0"	4"Ø 3'-0"	5"Ø 3'-0"	5"Ø 3'-0"	S4X9.5 4'-0"	S6X12.5 4'-0"	S6X12.5 4'-6"	S6X12.5 3'-0"	S6X12.5 3'-6"	S6X12.5 3'-6"	S6X12.5 4'-0"	S6X12.5 4'-0"	S6X17.5 4'-0"	S6X17.5 4'-6"	S8X18.4 4'-6"	S6X12.5 3'-6"	S6X12.5 4'-0"	S6X12.5 4'-0"	S6X17.5 4'-0"	S6X17.5 4'-0"	S6X17.5 4'-6"	S8X18.4 4'-6"	S8X18.4 4'-6"
7'-0"	3"Ø 3'-0"	4"Ø 3'-0"	4"Ø 3'-0"	5"Ø 3'-0"	5"Ø 3'-6"	S6X12.5 4'-0"	S6X12.5 3'-0"	S6X12.5 3'-6"	S6X12.5 3'-6"	S6X12.5 3'-6"	S6X12.5 4'-0"	S6X17.5 4'-0"	S6X17.5 4'-6"	S8X18.4 4'-6"	S8X18.4 4'-6"	S8X18.4 5'-0"	S6X17.5 4'-0"	S6X17.5 4'-0"	S6X17.5 4'-6"	S8X18.4 4'-6"	S8X18.4 4'-6"	S8X18.4 5'-0"	S8X18.4 5'-0"	S8X18.4 5'-0"
8'-0"	3"Ø 3'-0"	4"Ø 3'-0"	5"Ø 3'-0"	5"Ø 3'-6"	6"Ø 4'-0"	S6X12.5 3'-0"	S6X12.5 3'-6"	S6X12.5 3'-6"	S6X12.5 4'-0"	S6X12.5 4'-0"	S6X17.5 4'-6"	S8X18.4 4'-6"	S8X18.4 4'-6"	S8X18.4 5'-0"	S8X18.4 5'-0"	S8X18.4 5'-6"	S8X18.4 4'-6"	S8X18.4 4'-6"	S8X18.4 4'-6"	S8X18.4 5'-0"	S8X18.4 5'-0"	S8X18.4 5'-0"	S8X18.4 5'-6"	S8X18.4 5'-6"
9'-0"	3"Ø 3'-0"	4"Ø 3'-0"	5"Ø 3'-6"	6"Ø 4'-0"	6"Ø 4'-0"	S6X12.5 3'-6"	S6X12.5 3'-6"	S6X12.5 4'-0"	S6X17.5 4'-0"	S6X17.5 4'-6"	S8X18.4 4'-6"	S8X18.4 5'-0"	S8X18.4 5'-0"	S8X18.4 5'-6"	S8X18.4 5'-6"	S8X18.4 5'-6"	S8X18.4 5'-0"	S8X18.4 5'-0"	S8X18.4 5'-0"	S8X18.4 5'-0"	S8X18.4 5'-6"	S8X18.4 5'-6"	W10X19.0 5'-0"	W10X19.0 6'-0"
10'-0"	3"Ø 3'-0"	5"Ø 3'-0"	5"Ø 3'-6"	6"Ø 4'-0"	6"Ø 4'-6"	S6X12.5 3'-6"	S6X12.5 4'-0"	S6X17.5 4'-6"	S6X17.5 4'-6"	S8X18.4 5'-0"	S8X18.4 5'-0"	S8X18.4 5'-6"	S8X18.4 5'-6"	S8X18.4 6'-0"	W10X19.0 6'-0"	W10X19.0 6'-6"	S8X18.4 5'-6"	S8X18.4 5'-6"	S8X18.4 6'-0"	S8X18.4 6'-0"	W10X19.0 6'-0"	W10X19.0 6'-6"	W10X19.0 6'-6"	W10X19.0 6'-6"
11'-0"	4"Ø 3'-0"	5"Ø 3'-0"	6"Ø 3'-6"	6"Ø 4'-6"	8"Ø 5'-0"	S6X12.5 4'-0"	S6X17.5 4'-6"	S6X17.5 4'-6"	S8X18.4 5'-0"	S8X18.4 5'-0"	S8X18.4 5'-6"	S8X18.4 5'-6"	W10X19.0 6'-0"	W10X19.0 6'-0"	W10X19.0 6'-6"	W10X19.0 7'-0"	S8X18.4 5'-6"	S8X18.4 5'-6"	W10X19.0 6'-0"	W10X19.0 6'-0"	W10X19.0 6'-6"	W10X19.0 6'-6"	W10X19.0 7'-0"	W10X22.0 7'-0"
12'-0"	4"Ø 3'-0"	5"Ø 3'-0"	6"Ø 4'-0"	6"Ø 4'-6"	8"Ø 5'-0"	S6X12.5 4'-0"	S6X17.5 4'-6"	S6X18.4 4'-6"	S8X18.4 5'-0"	S8X18.4 5'-0"	S8X18.4 5'-6"	W10X19.0 6'-0"	W10X19.0 6'-0"	W10X19.0 6'-6"	W10X22.0 6'-6"	W10X22.0 7'-0"	W10X19.0 5'-6"	W10X19.0 6'-0"	W10X19.0 6'-0"	W10X19.0 6'-6"	W10X19.0 6'-6"	W10X22.0 6'-6"	W10X22.0 7'-0"	W10X22.0 7'-0"
13'-0"	4"Ø 3'-0"	5"Ø 3'-6"	6"Ø 4'-0"	8"Ø 5'-0"	8"Ø 5'-6"	S6X17.5 4'-0"	S8X18.4 4'-6"	S8X18.4 5'-0"	S8X18.4 5'-0"	S8X18.4 5'-6"	W10X19.0 6'-0"	W10X19.0 6'-0"	W10X19.0 6'-6"	W10X22.0 6'-6"	W10X22.0 7'-0"	W10X22.0 7'-0"	W10X19.0 6'-0"	W10X19.0 6'-0"	W10X19.0 6'-6"	W10X22.0 6'-6"	W10X22.0 7'-0"	W10X22.0 7'-0"	W10X22.0 7'-0"	W10X22.0 7'-6"
14'-0"	4"Ø 3'-0"	5"Ø 3'-6"	6"Ø 4'-6"	8"Ø 5'-0"	8"Ø 5'-6"	S6X17.5 4'-6"	S8X18.4 5'-0"	S8X18.4 5'-0"	S8X18.4 5'-6"	W10X19.0 6'-0"	W10X19.0 6'-0"	W10X19.0 6'-6"	W10X22.0 6'-6"	W10X22.0 7'-0"	W10X26.0 7'-6"	W10X26.0 7'-6"	W10X19.0 6'-6"	W10X22.0 6'-6"	W10X22.0 7'-0"	W10X22.0 7'-0"	W10X22.0 7'-0"	W10X26.0 7'-6"	W10X26.0 7'-6"	W10X30.0 8'-0"
15'-0"	4"Ø 3'-0"	6"Ø 3'-6"	6"Ø 4'-6"	8"Ø 5'-6"	8"Ø 6'-0"	S8X18.4 4'-6"	S8X18.4 5'-0"	S8X18.4 5'-6"	S8X18.4 5'-6"	W10X19.0 6'-0"	W10X19.0 6'-6"	W10X22.0 6'-6"	W10X22.0 7'-0"	W10X26.0 7'-6"	W10X30.0 7'-6"	W10X30.0 8'-0"	W10X22.0 6'-6"	W10X22.0 7'-0"	W10X22.0 7'-0"	W10X26.0 7'-6"	W10X26.0 7'-6"	W10X26.0 7'-6"	W10X30.0 8'-0"	W10X30.0 8'-0"
16'-0"	4"Ø 3'-0"	6"Ø 4'-0"	8"Ø 4'-6"	8"Ø 5'-6"	8"Ø 6'-0"	S8X18.4 5'-0"	S8X18.4 5'-0"	S8X18.4 5'-6"	W10X19.0 6'-0"	W10X19.0 6'-6"	W10X22.0 6'-6"	W10X22.0 7'-0"	W10X26.0 7'-6"	W10X30.0 7'-6"	W10X30.0 8'-0"	W10X30.0 8'-6"	W10X22.0 7'-0"	W10X22.0 7'-0"	W10X26.0 7'-6"	W10X26.0 7'-6"	W10X30.0 8'-0"	W10X30.0 8'-0"	W10X30.0 8'-6"	W10X30.0 8'-6"

USE 10' WIDTH IF SIZE FALLS IN THIS AREA

WIDTH W	SPACING FOR POSTS
1'- 5'	ONE POST
6'	1'* 4'* 1'
7'	1'* 5'* 1'
8'	1'* 6'* 1'
9'	1'* 7'* 1'
10'	1'* 8'* 1'
11'	1.5'* 8'* 1.5'
12'	2'* 8'* 2'
13'	2.5'* 8'* 2.5'
14'	3'* 8'* 3'
15'	3.5'* 8'* 3.5'
16'	4'* 8'* 4'
17'	1'* 7.5'* 7.5' * 1'
18'	1'* 8'* 8' * 1'
19'	1.5'* 8'* 8' * 1.5'
20'	2'* 8'* 8' * 2'
21'	2.5'* 8'* 8' * 2.5'
22'	3'* 8'* 8' * 3'
23'	3.5'* 8'* 8' * 3.5'
24'	4'* 8'* 8' * 4'

(*)REPRESENTS ONE POST

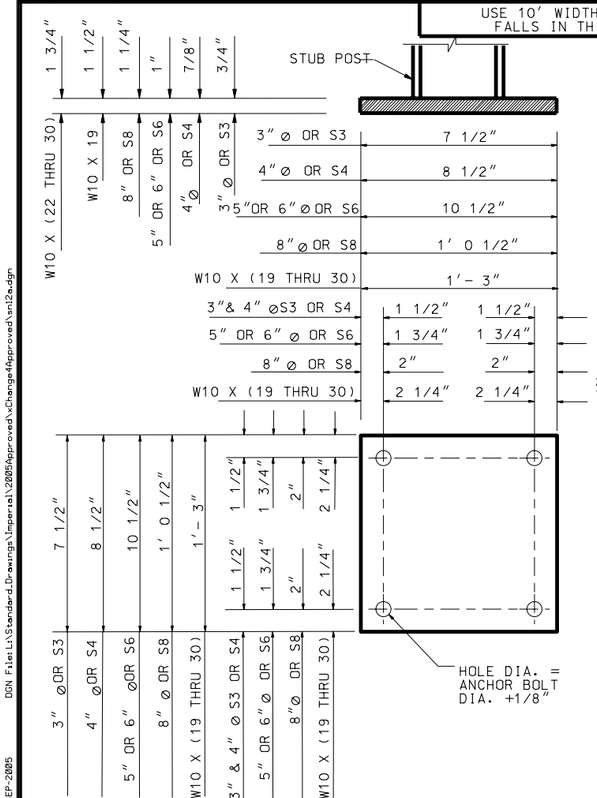

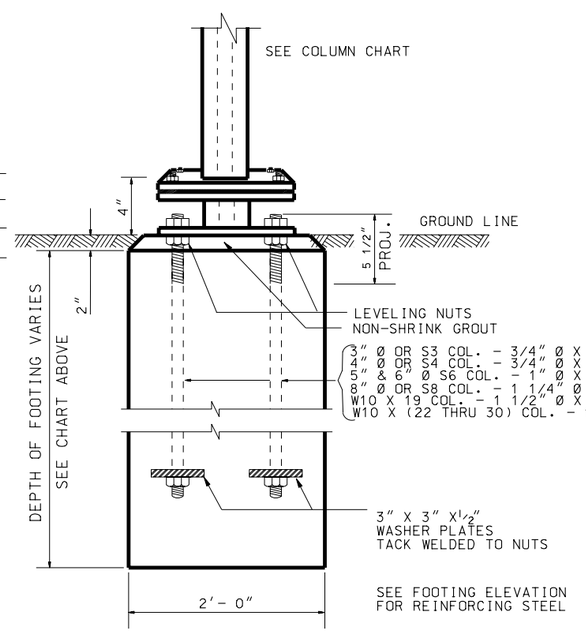

FOOTING DETAILS

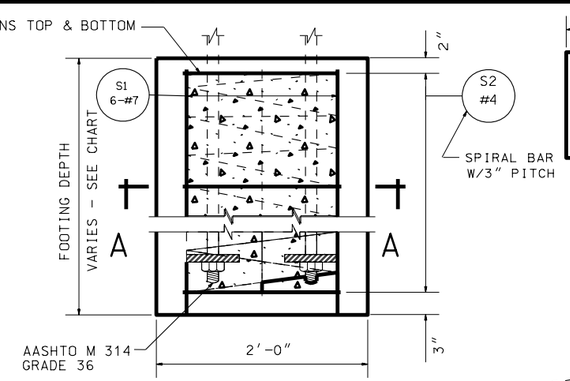

FOOTING ELEVATION

BAR	LENGTH
S1	FOOTING DEPTH MINUS 2"
S2	1'-8" OUTSIDE DIAMETER

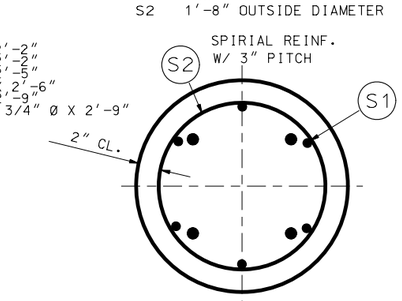

SECTION A – A

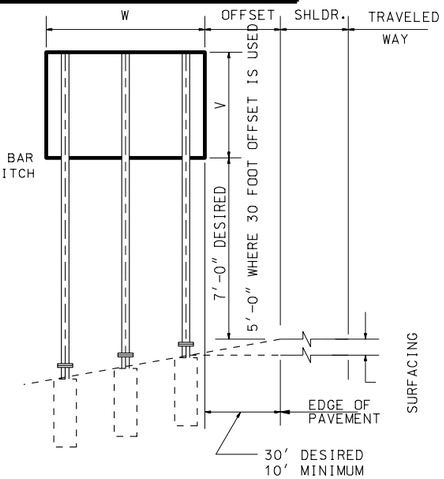

REAR ELEVATION

NOTES:

1. ENTER CHART WITH KNOWN HORIZONTAL AND VERTICAL DIMENSIONS OF SIGN. PROCEED HORIZONTALLY AND VERTICALLY FROM GIVEN DIMENSIONS TO INTERSECTING SQUARE WHICH GIVES IN ORDER, TOP: NUMBER, SIZE AND WEIGHT OF SUPPORT SECTION OR OF STANDARD STRENGTH PIPE COLUMNS, BOTTOM: MINIMUM REQUIRED DEPTH OF FOOTING.
2. SEE STD DWG SN 12B FOR MATERIAL SPECIFICATIONS NOT GIVEN AND GENERAL NOTES.
3. DO NOT ATTACH SIGNS BELOW HINGE POINT.

NO.	DATE	APPR.	REMARKS
1	08/25/05	B.W.	REVISED/CLARIFIED FOUNDATION REINFORCING STEEL.

REVISIONS

UTAH DEPARTMENT OF TRANSPORTATION
STANDARD DRAWINGS FOR ROAD AND BRIDGE CONSTRUCTION
SALT LAKE CITY, UTAH

RECOMMENDED FOR APPROVAL — AUG.25,2005 DATE
CHAIRMAN STANDARDS COMMITTEE
APPROVED — AUG.25,2005 DATE
DEPUTY DIRECTOR

GROUND MOUNTED SIGN INSTALLATION DETAILS

STANDARD DRAWING TITLE

STD DWG
SN 12A

DGN File:L:\Standard Drawings\Imperial\2005\Approved\x\Change4\Approved\sn12a.dgn
01-SEP-2005