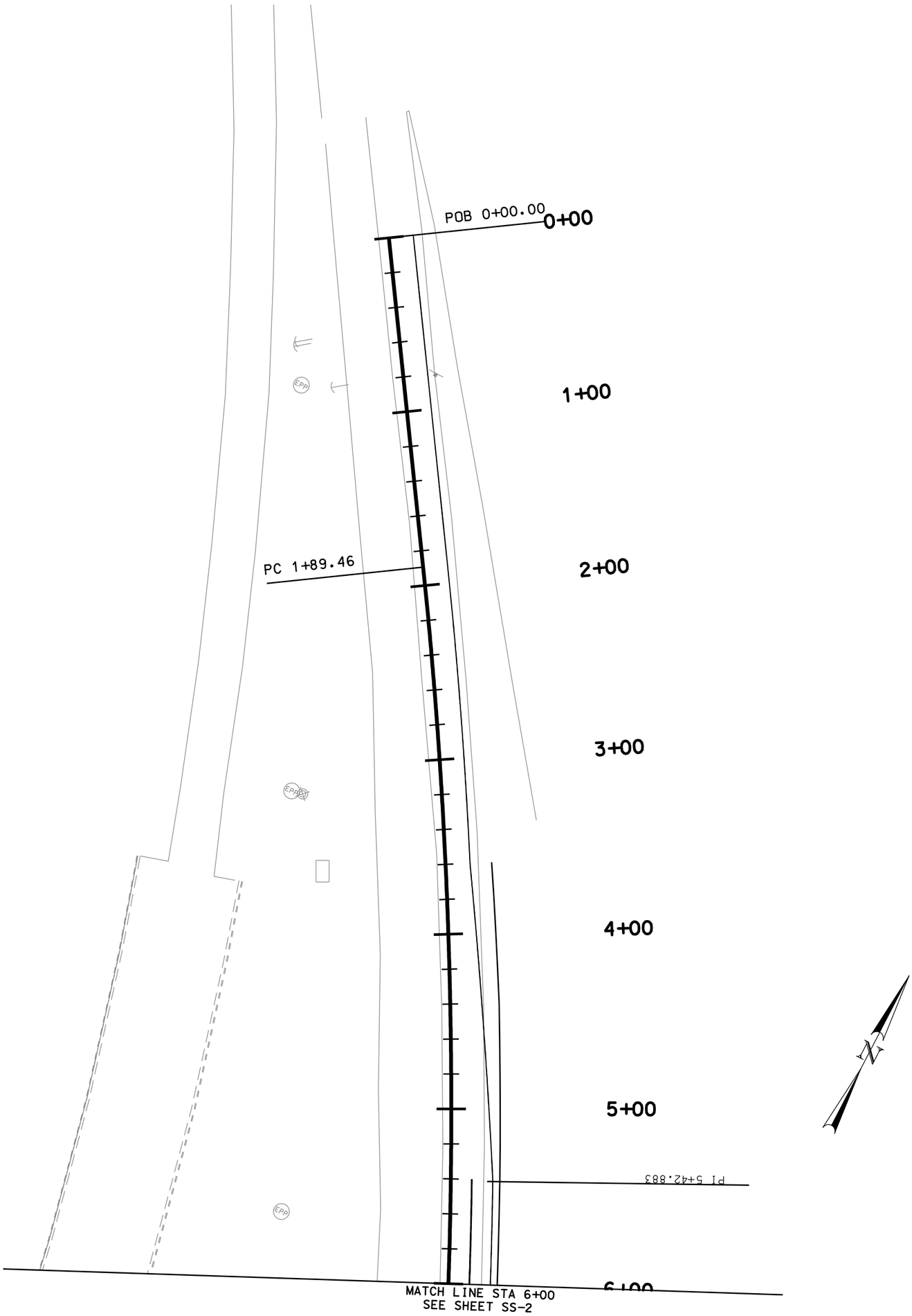

SHEET NO. SS-1	UTAH COUNTY	SR-92, EAST OF I-15	UTAH DEPARTMENT OF TRANSPORTATION		
		IN LEHI, UTAH CO.	REGION THREE, OREM, UTAH		
		SIGNING AND STRIPING	ROADWAY DESIGN		
		PROJECT NUMBER SP-0092(5)1	APPROVAL RECOMM. DATE PROJECT DESIGN ENGINEER	DESIGN CHECK	REVIEW
			APPROVED FOR USE BY UDOT DATE PRECONSTRUCTION ENGINEER	DRAWN CHECK	DATE
				QUANT. CHECK	BY

NO.	DATE	DESIGN REV.BY	MAPS CORR.BY	PARCELS AFFECTED	REQUEST BY	REMARKS
		ORIGINAL SUBMISSION FOR AUTHORIZATION				
DATE		REVISIONS				

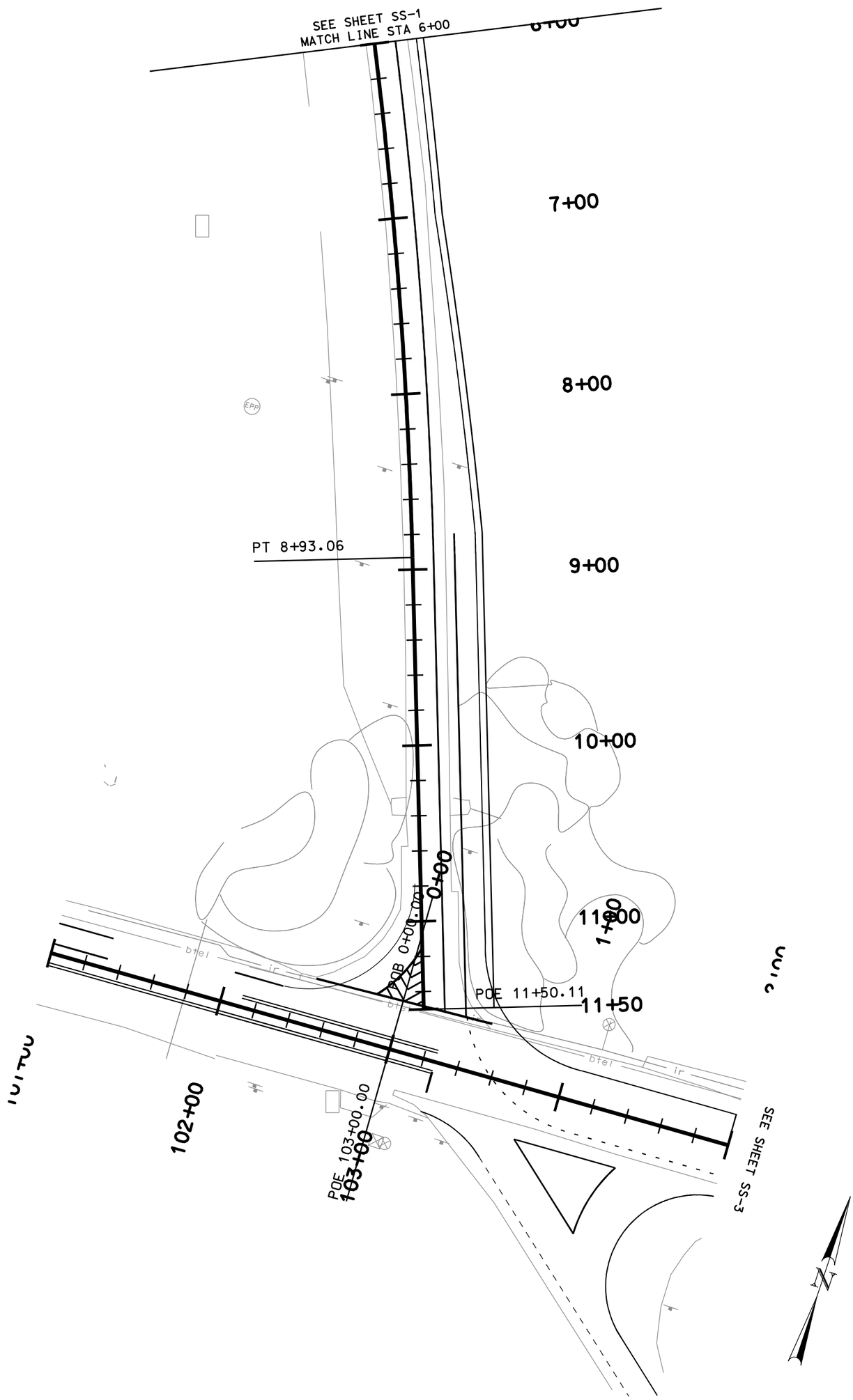

SHEET NO. SS-2	COUNTY UTAH	SR-92, EAST OF I-15	UTAH DEPARTMENT OF TRANSPORTATION								
		IN LEHI, UTAH CO.	REGION THREE, OREM, UTAH								
		SIGNING AND STRIPING	ROADWAY DESIGN								
			APPROVAL RECOMM. DATE PROJECT DESIGN ENGINEER	DESIGN	CHECK	REVIEW					
				DRAWN	CHECK	DATE	NO.	DATE	DESIGN REV.BY	MAPS CORR.BY	PARCELS AFFECTED	REQUEST BY	REMARKS
		PROJECT NUMBER SP-0092(5)1	APPROVED FOR USE BY UDOT DATE PRECONSTRUCTION ENGINEER	QUANT.	CHECK	BY			ORIGINAL SUBMISSION FOR AUTHORIZATION				
								DATE	REVISIONS				

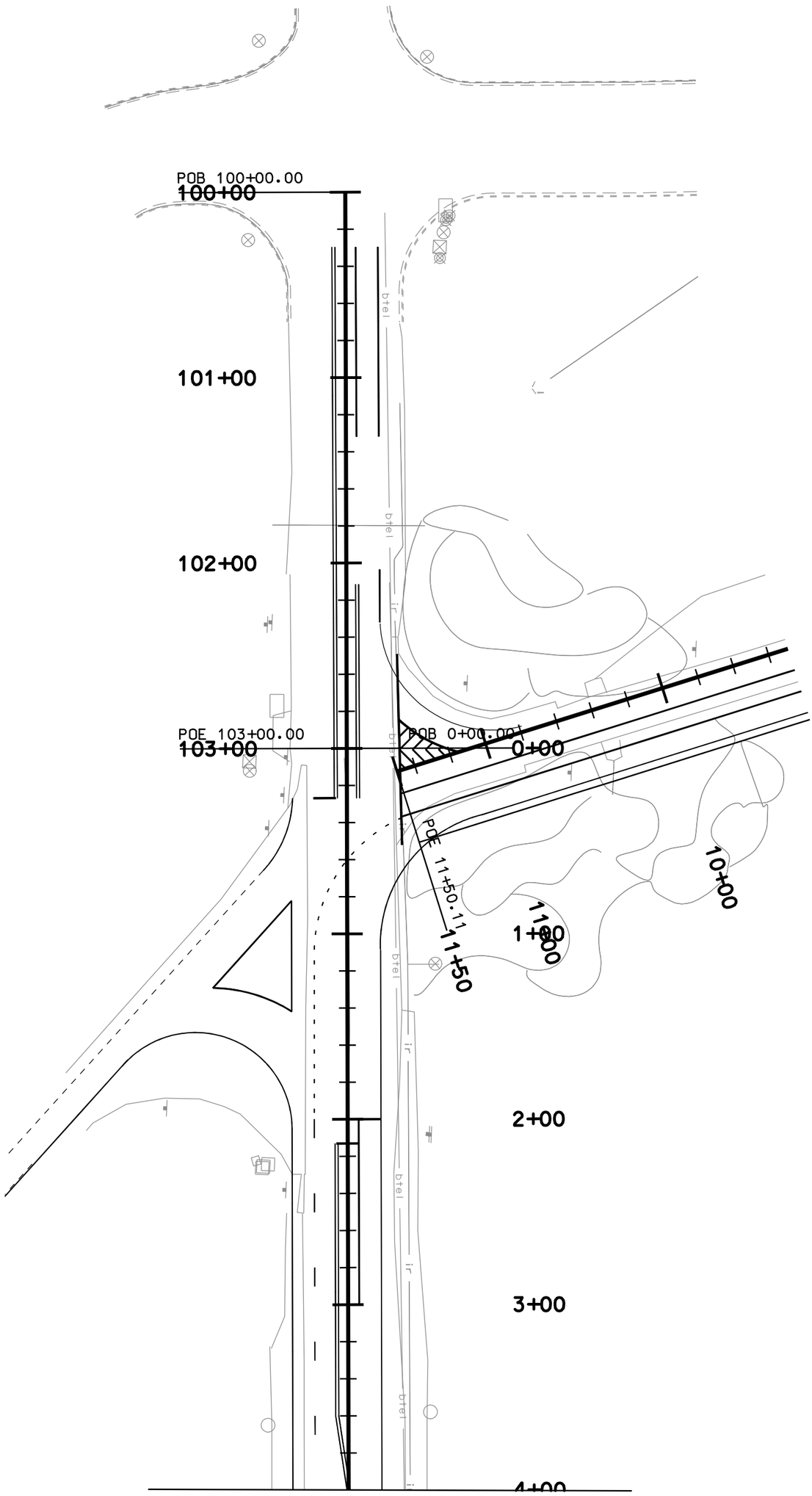

SR-92, EAST OF I-15	UTAH DEPARTMENT OF TRANSPORTATION		
IN LEHI, UTAH CO.	REGION THREE, OREM, UTAH		
SIGNING AND STRIPING	ROADWAY DESIGN		
PROJECT NUMBER SP-0092(5)1	APPROVAL RECOMM. DATE PROJECT DESIGN ENGINEER	DESIGN CHECK	REVIEW
	APPROVED FOR USE BY UDOT DATE PRECONSTRUCTION ENGINEER	DRAWN CHECK	DATE
		QUANT. CHECK	BY

SHEET NO. SS-3 COUNTY UTAH

NO.	DATE	DESIGN REV.BY	MAPS CORR.BY	PARCELS AFFECTED	REQUEST BY	REMARKS
						ORIGINAL SUBMISSION FOR AUTHORIZATION
DATE						REVISIONS

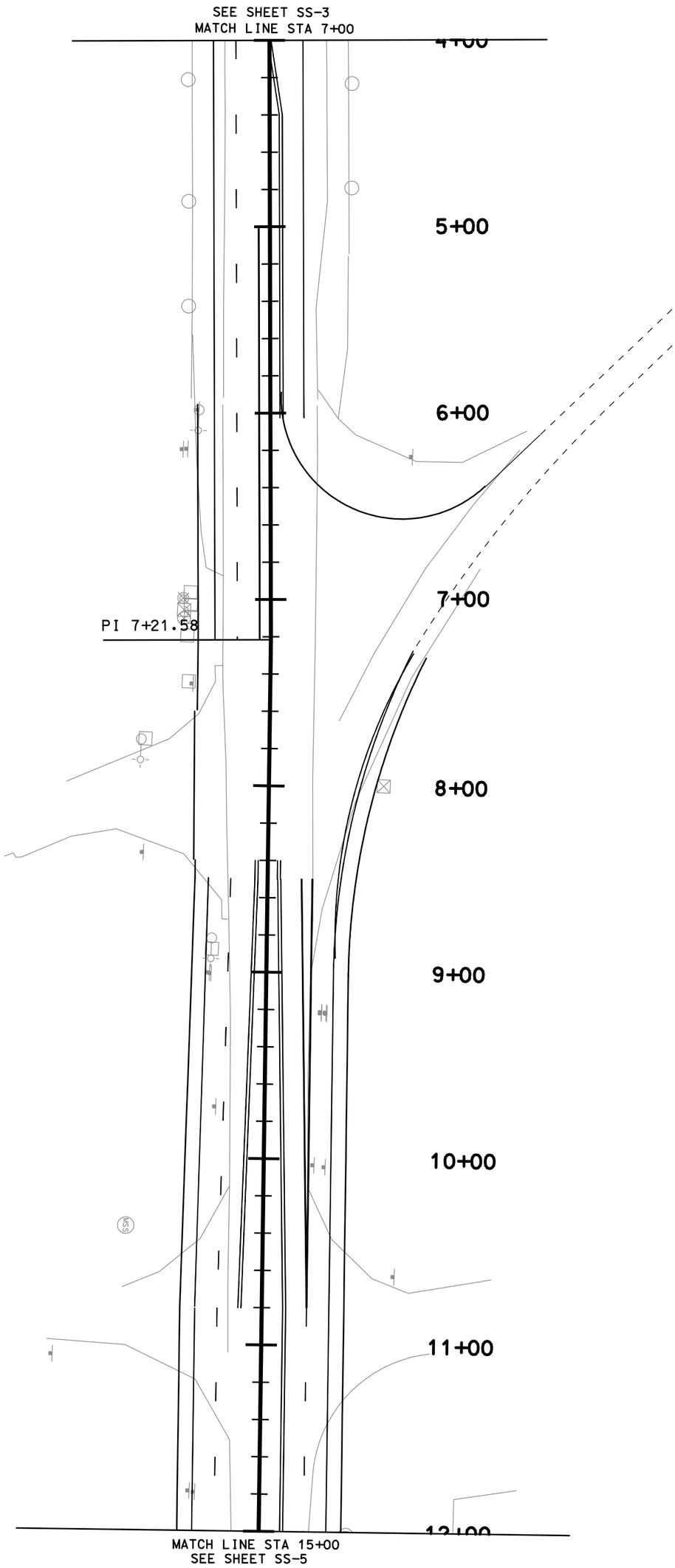

SR-92, EAST OF I-15	UTAH DEPARTMENT OF TRANSPORTATION				
IN LEHI, UTAH CO.	REGION THREE, OREM, UTAH				
	ROADWAY DESIGN				
SIGNING AND STRIPING	APPROVAL RECOMM. DATE PROJECT DESIGN ENGINEER	DESIGN CHECK	REVIEW		
		DRAWN CHECK	DATE		
PROJECT NUMBER SP-0092(5)1	APPROVED FOR USE BY UDOT DATE PRECONSTRUCTION ENGINEER	QUANT. CHECK	BY		

NO.	DATE	DESIGN REV.BY	MAPS CORR.BY	PARCELS AFFECTED	REQUEST BY	REMARKS
						ORIGINAL SUBMISSION FOR AUTHORIZATION
	DATE					REVISIONS

SHEET NO. SS-4 COUNTY UTAH

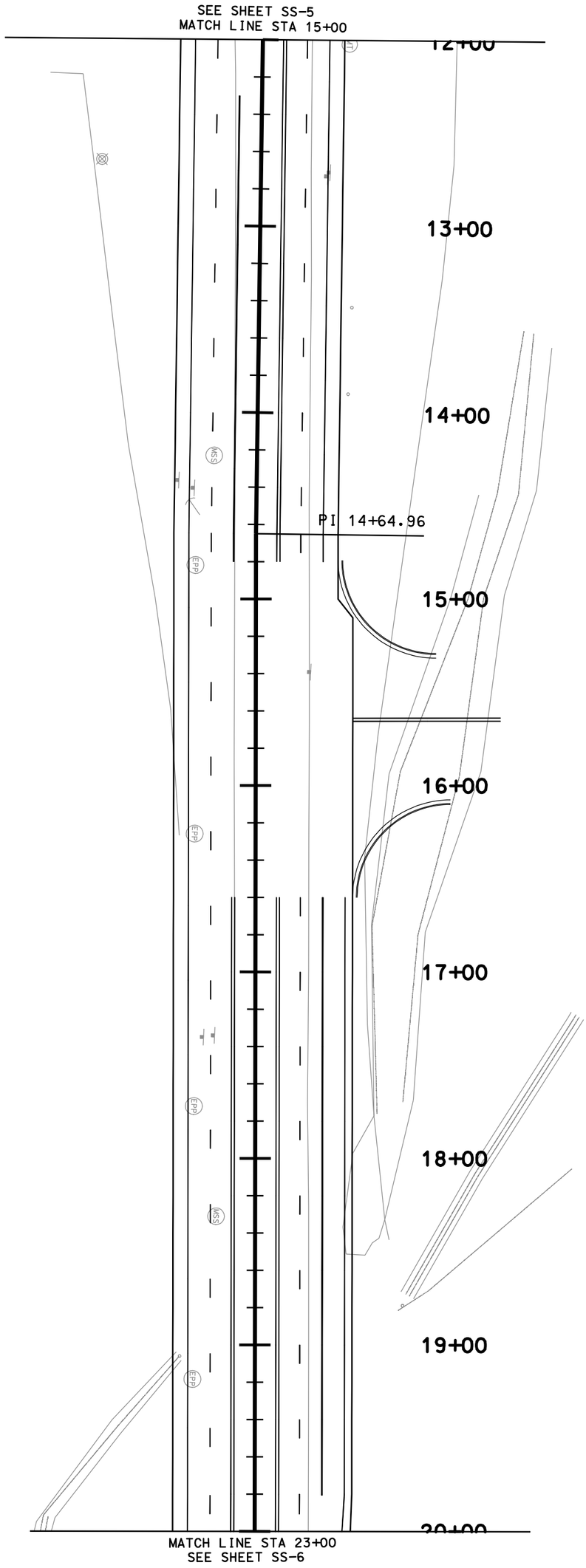

SR-92, EAST OF I-15	UTAH DEPARTMENT OF TRANSPORTATION REGION THREE, OREM, UTAH ROADWAY DESIGN				
IN LEHI, UTAH CO.					
SIGNING AND STRIPING	APPROVAL RECOMM. ____ DATE ____ PROJECT DESIGN ENGINEER	DESIGN ____	CHECK ____	REVIEW	
		DRAWN ____	CHECK ____	DATE ____	
PROJECT NUMBER SP-0092(5)1	APPROVED FOR USE BY UDOT ____ DATE ____ PRECONSTRUCTION ENGINEER	QUANT. ____	CHECK ____	BY ____	

NO.	DATE	DESIGN REV.BY	MAPS CORR.BY	PARCELS AFFECTED	REQUEST BY	REMARKS
						ORIGINAL SUBMISSION FOR AUTHORIZATION
	DATE					REVISIONS

SHEET NO. SS-5 COUNTY UTAH

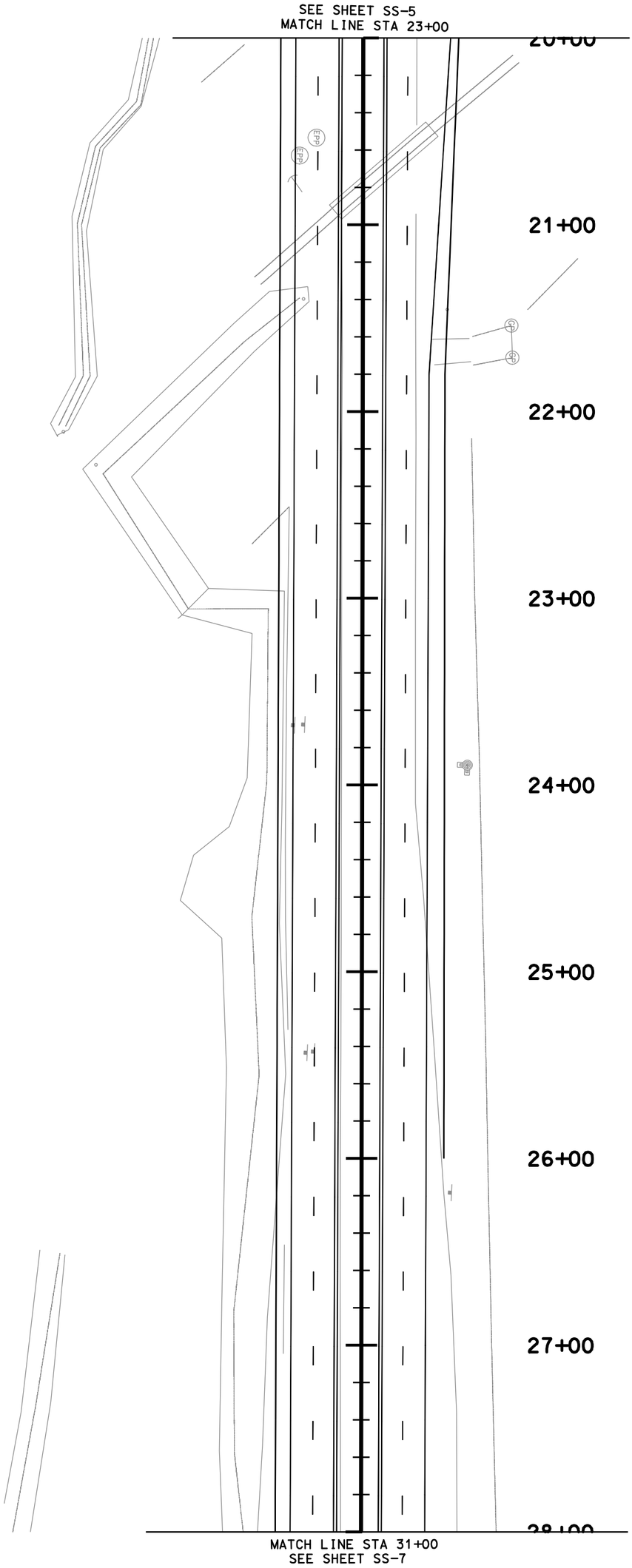

SHEET NO. SS-6

UTAH COUNTY

SR-92, EAST OF I-15
IN LEHI, UTAH CO.
SIGNING AND STRIPING

PROJECT NUMBER SP-0092(5)1

UTAH DEPARTMENT OF TRANSPORTATION
REGION THREE, OREM, UTAH
ROADWAY DESIGN

APPROVAL RECOMM. DATE PROJECT DESIGN ENGINEER
APPROVED FOR USE BY UDOT DATE PRECONSTRUCTION ENGINEER

DESIGN CHECK
DRAWN CHECK
QUANT. CHECK

REVIEW
DATE
BY

NO.	DATE	DESIGN REV.BY	MAPS CORR.BY	PARCELS AFFECTED	REQUEST BY	REMARKS
						ORIGINAL SUBMISSION FOR AUTHORIZATION
DATE						REVISIONS

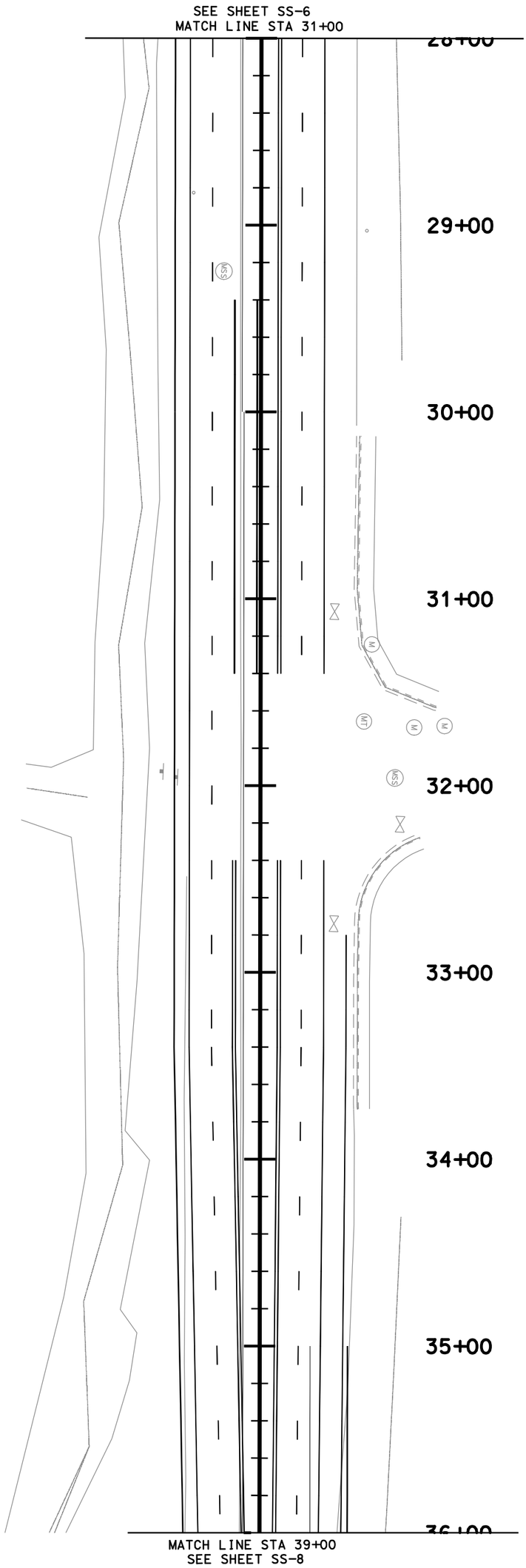

SR-92, EAST OF I-15	UTAH DEPARTMENT OF TRANSPORTATION				
IN LEHI, UTAH CO.	REGION THREE, OREM, UTAH				
SIGNING AND STRIPING	ROADWAY DESIGN				
	APPROVAL RECOMM. DATE PROJECT DESIGN ENGINEER	DESIGN CHECK	REVIEW	NO. DATE DESIGN REV.BY MAPS CORR.BY PARCELS AFFECTED REQUEST BY REMARKS	
		DRAWN CHECK	DATE	ORIGINAL SUBMISSION FOR AUTHORIZATION	
PROJECT NUMBER SP-0092(5)1	APPROVED FOR USE BY UDOT DATE PRECONSTRUCTION ENGINEER	QUANT. CHECK	BY	DATE REVISIONS	

SHEET NO. SS-7 COUNTY UTAH

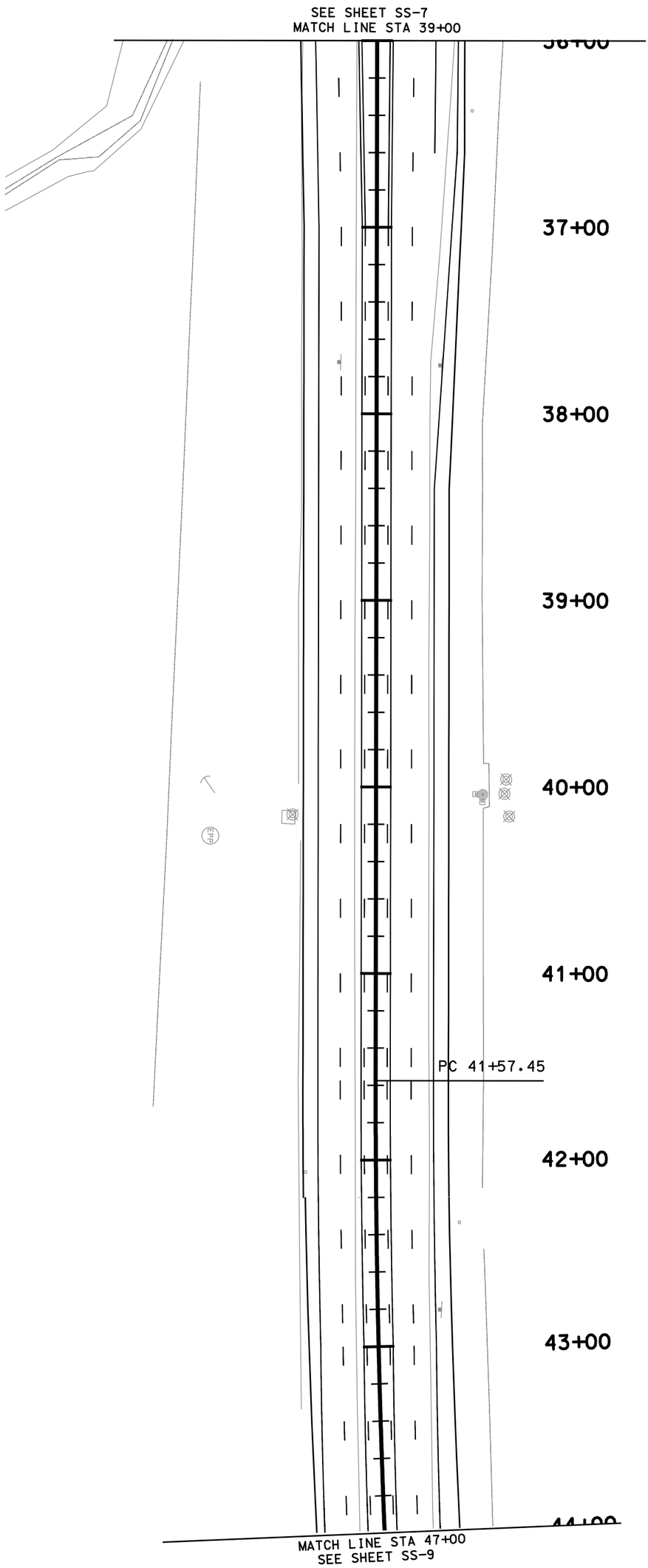

SR-92, EAST OF I-15	UTAH DEPARTMENT OF TRANSPORTATION				
IN LEHI, UTAH CO.	REGION THREE, OREM, UTAH				
SIGNING AND STRIPING	ROADWAY DESIGN				
	APPROVAL RECOMM. DATE PROJECT DESIGN ENGINEER	DESIGN	CHECK	REVIEW	
		DRAWN	CHECK	DATE	
PROJECT NUMBER SP-0092(5)1	APPROVED FOR USE BY UDOT DATE PRECONSTRUCTION ENGINEER	QUANT.	CHECK	BY	

NO.	DATE	DESIGN REV.BY	MAPS CORR.BY	PARCELS AFFECTED	REQUEST BY	REMARKS
		ORIGINAL SUBMISSION FOR AUTHORIZATION				
DATE		REVISIONS				

SHEET NO. SS-8 COUNTY UTAH

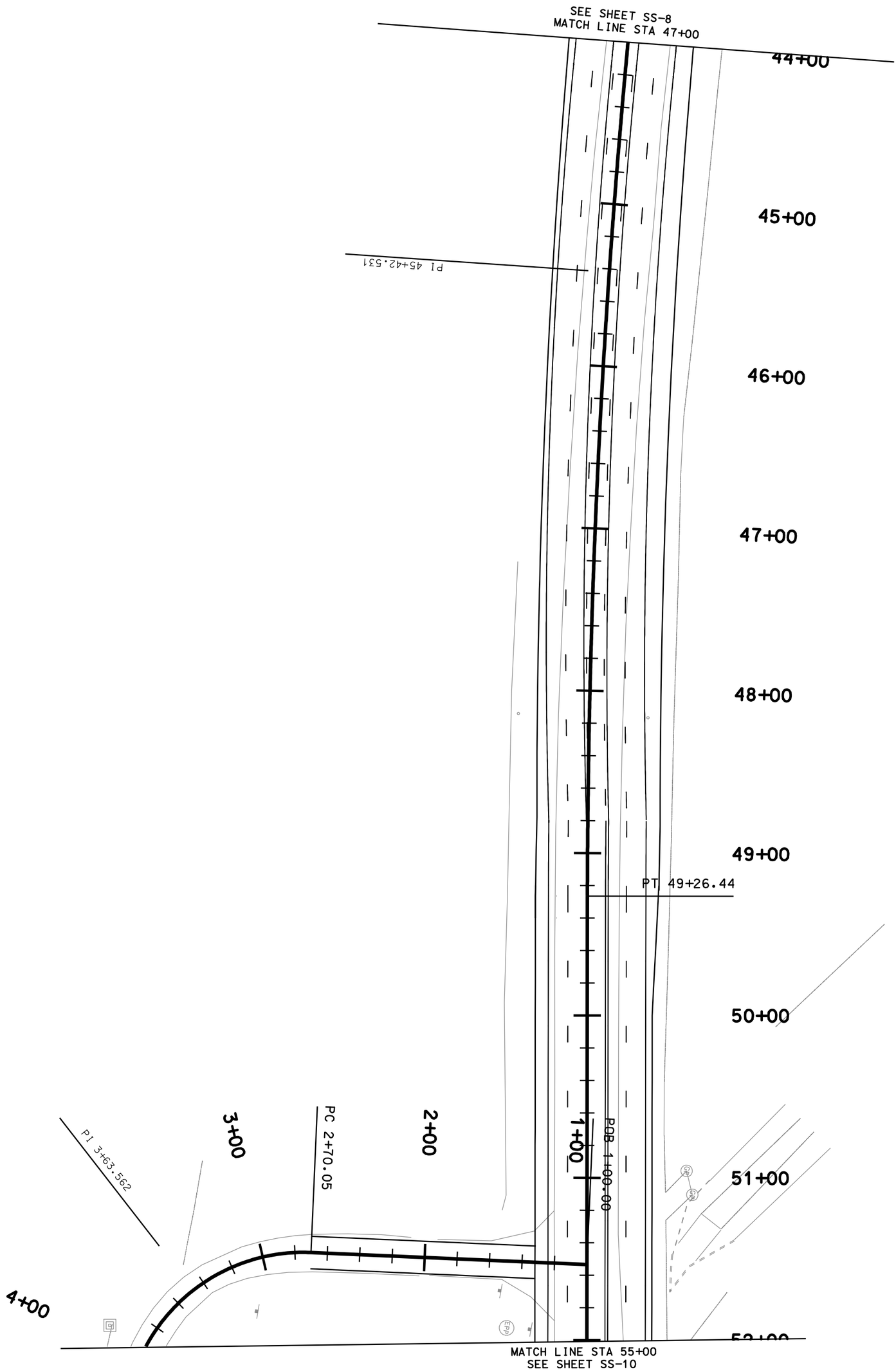

SR-92, EAST OF I-15	UTAH DEPARTMENT OF TRANSPORTATION				
IN LEHI, UTAH CO.	REGION THREE, OREM, UTAH				
SIGNING AND STRIPING	ROADWAY DESIGN				
	APPROVAL RECOMM. DATE PROJECT DESIGN ENGINEER	DESIGN	CHECK	REVIEW	
		DRAWN	CHECK	DATE	
PROJECT NUMBER SP-0092(5)1	APPROVED FOR USE BY UDOT DATE PRECONSTRUCTION ENGINEER	QUANT.	CHECK	BY	

NO.	DATE	DESIGN REV.BY	MAPS CORR.BY	PARCELS AFFECTED	REQUEST BY	REMARKS
		ORIGINAL SUBMISSION FOR AUTHORIZATION				
DATE		REVISIONS				

SHEET NO. SS-9 COUNTY UTAH

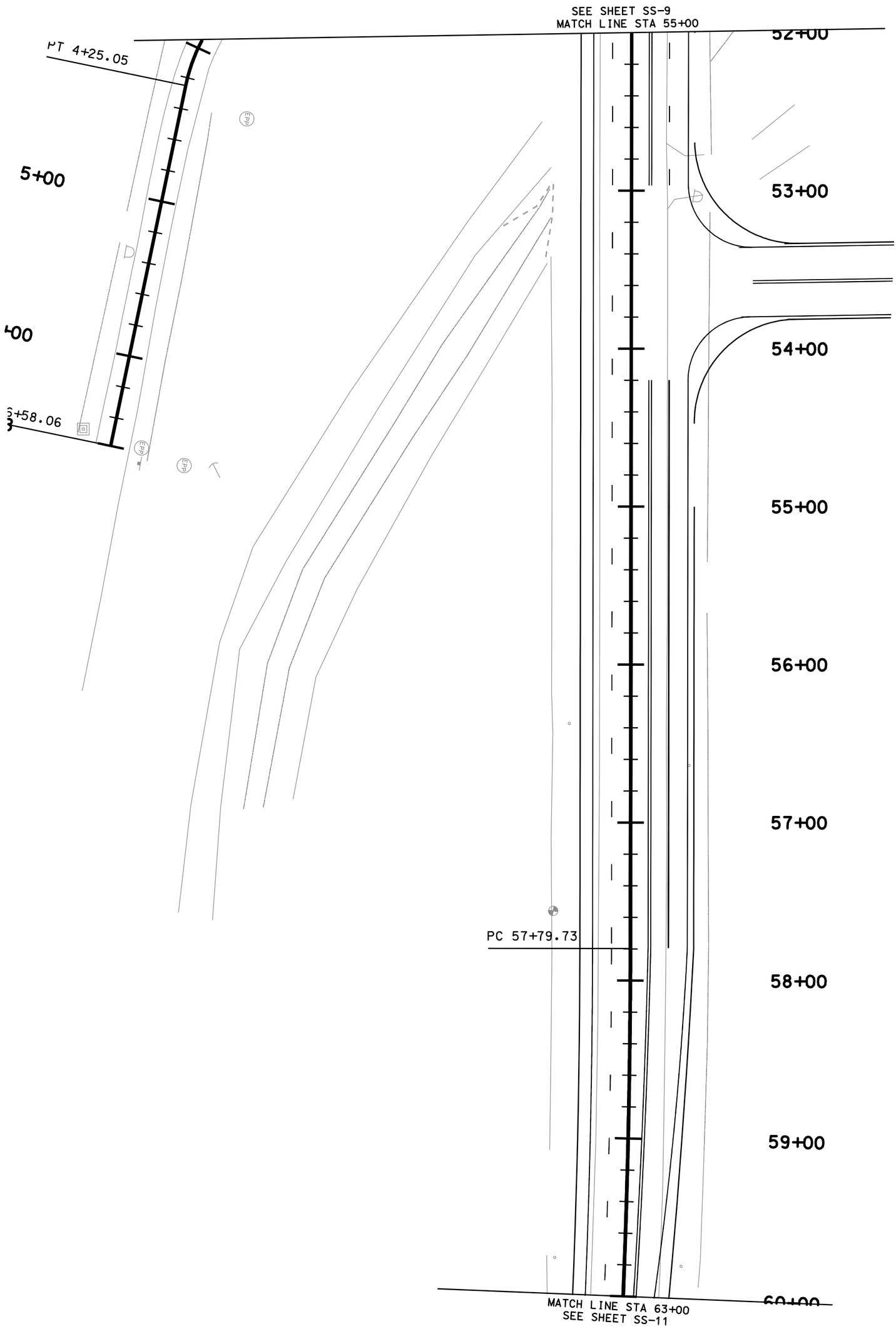

SR-92, EAST OF I-15	UTAH DEPARTMENT OF TRANSPORTATION				
IN LEHI, UTAH CO.	REGION THREE, OREM, UTAH				
SIGNING AND STRIPING	ROADWAY DESIGN				
	APPROVAL RECOMM. DATE PROJECT DESIGN ENGINEER	DESIGN	CHECK	REVIEW	
		DRAWN	CHECK	DATE	
PROJECT NUMBER SP-0092(5)1	APPROVED FOR USE BY UDOT DATE PRECONSTRUCTION ENGINEER	QUANT.	CHECK	BY	

NO.	DATE	DESIGN REV.BY	MAPS CORR.BY	PARCELS AFFECTED	REQUEST BY	REMARKS
		ORIGINAL SUBMISSION FOR AUTHORIZATION				
	DATE	REVISIONS				

SHEET NO. SS-10 COUNTY UTAH

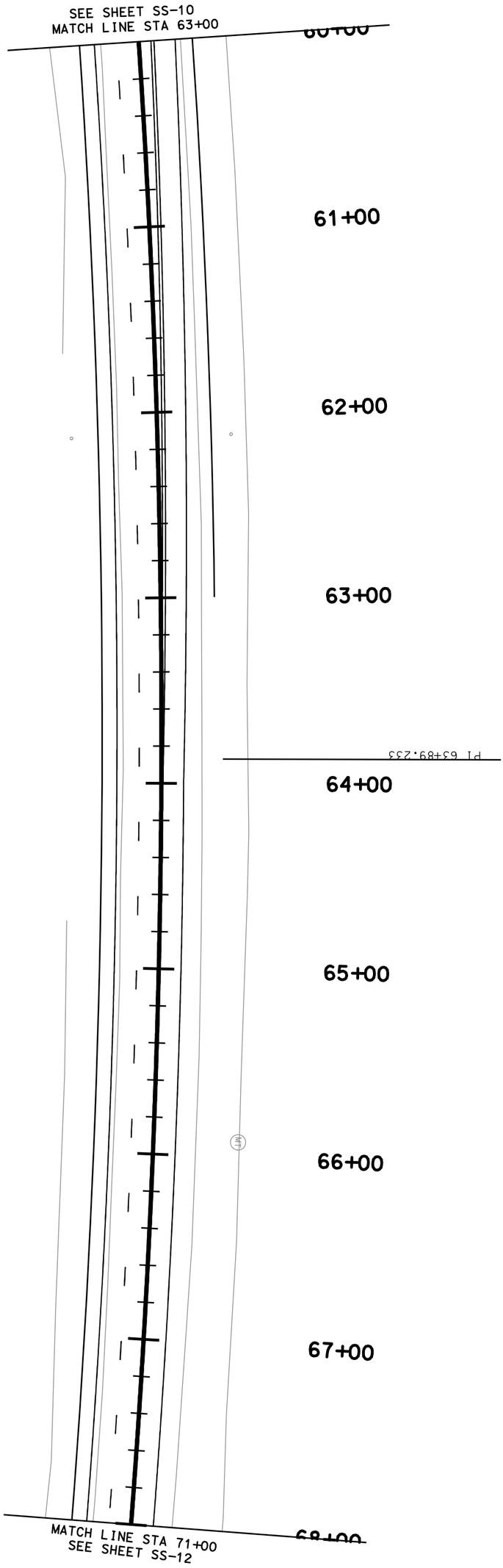

SHEET NO. SS-11	COUNTY UTAH	SR-92, EAST OF I-15	UTAH DEPARTMENT OF TRANSPORTATION		
		IN LEHI, UTAH CO.	REGION THREE, OREM, UTAH		
		SIGNING AND STRIPING	ROADWAY DESIGN		
		PROJECT NUMBER SP-0092(5)1	APPROVAL RECOMM. DATE PROJECT DESIGN ENGINEER	DESIGN CHECK	REVIEW
			APPROVED FOR USE BY UDOT DATE PRECONSTRUCTION ENGINEER	DRAWN CHECK	DATE
				QUANT. CHECK	BY

NO.	DATE	DESIGN REV.BY	MAPS CORR.BY	PARCELS AFFECTED	REQUEST BY	REMARKS
						ORIGINAL SUBMISSION FOR AUTHORIZATION
	DATE					REVISIONS

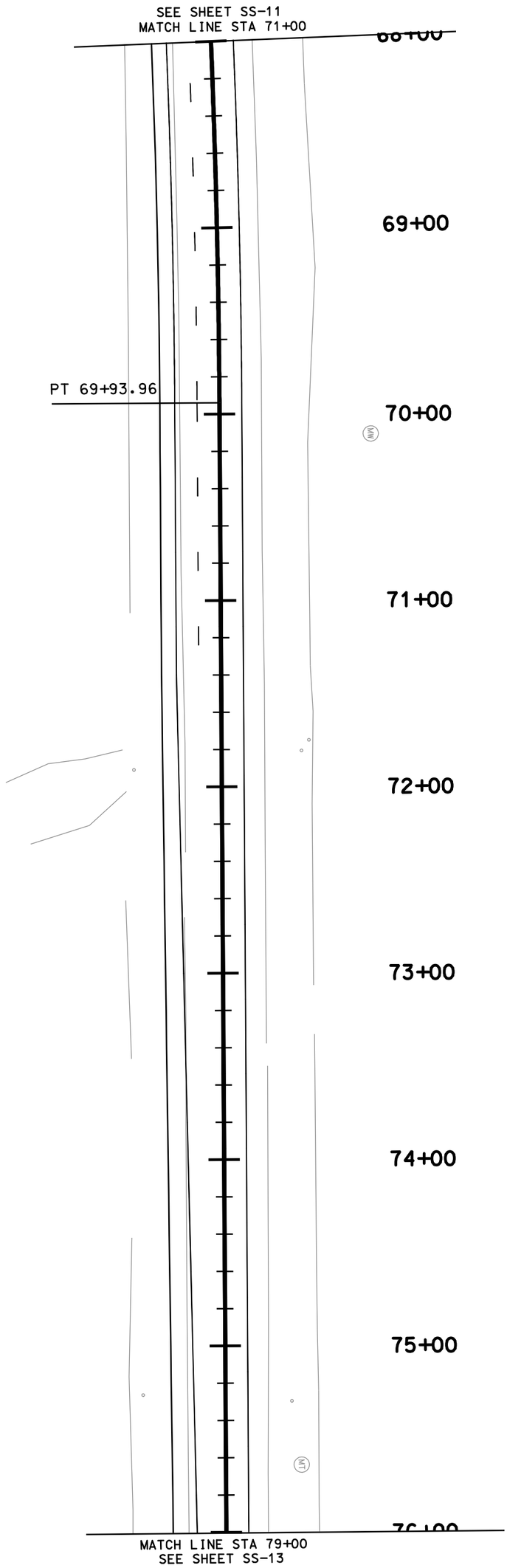

SR-92, EAST OF I-15	UTAH DEPARTMENT OF TRANSPORTATION				
IN LEHI, UTAH CO.	REGION THREE, OREM, UTAH				
SIGNING AND STRIPING	ROADWAY DESIGN				
	APPROVAL RECOMM. DATE PROJECT DESIGN ENGINEER	DESIGN	CHECK	REVIEW	
		DRAWN	CHECK	DATE	
	APPROVED FOR USE BY UDOT DATE PRECONSTRUCTION ENGINEER	QUANT.	CHECK	BY	
PROJECT NUMBER SP-0092(5)1					

NO.	DATE	DESIGN REV.BY	MAPS CORR.BY	PARCELS AFFECTED	REQUEST BY	REMARKS
		ORIGINAL SUBMISSION FOR AUTHORIZATION				
DATE		REVISIONS				

SHEET NO. SS-12 COUNTY UTAH

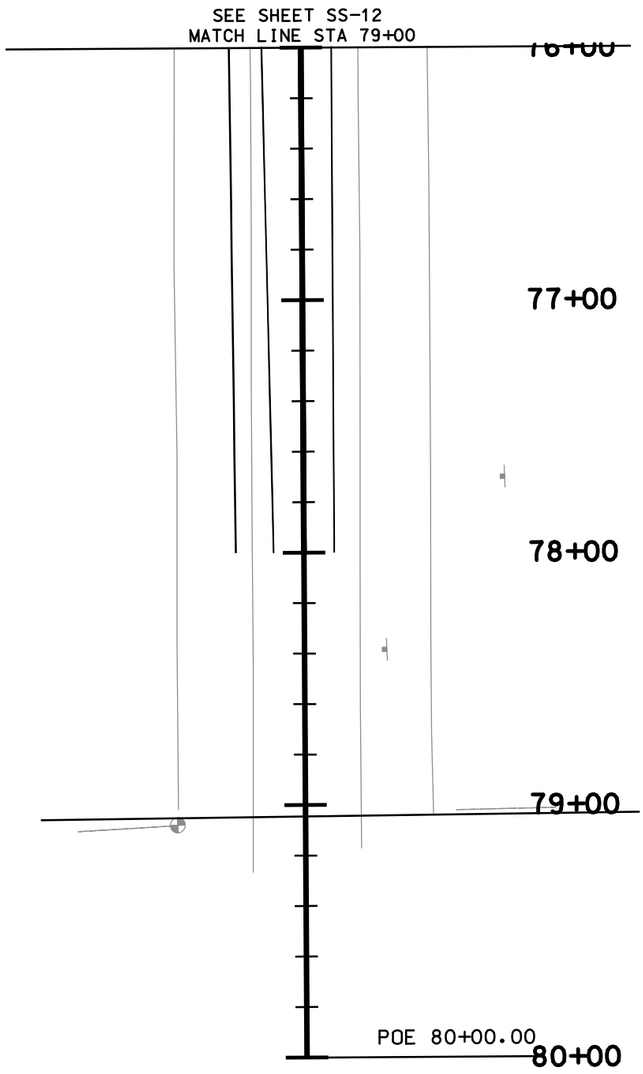

SHEET NO. SS-13	COUNTY UTAH	SR-92, EAST OF I-15	UTAH DEPARTMENT OF TRANSPORTATION		
		IN LEHI, UTAH CO.	REGION THREE, OREM, UTAH		
		SIGNING AND STRIPING	ROADWAY DESIGN		
		PROJECT NUMBER SP-0092(5)1	APPROVAL RECOMM. DATE PROJECT DESIGN ENGINEER	DESIGN CHECK	REVIEW
			APPROVED FOR USE BY UDOT DATE PRECONSTRUCTION ENGINEER	DRAWN CHECK	DATE
				QUANT. CHECK	BY

NO.	DATE	DESIGN REV.BY	MAPS CORR.BY	PARCELS AFFECTED	REQUEST BY	REMARKS
		ORIGINAL SUBMISSION FOR AUTHORIZATION				
	DATE	REVISIONS				