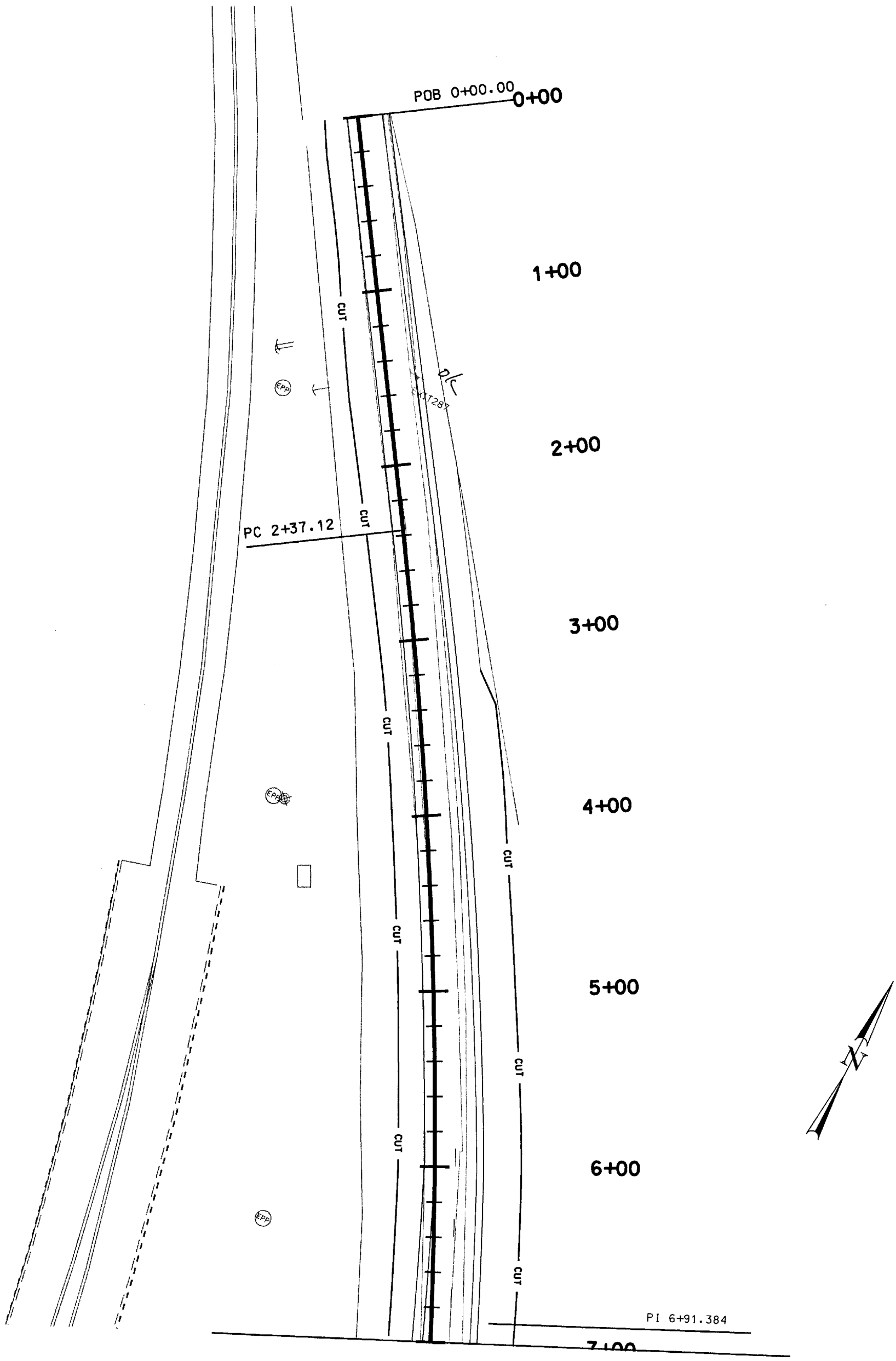

SHEET NO. RD-1	UTAH COUNTY	SR-92, EAST OF I-15 IN LEHI, UTAH CO. PLAN SHEET	UTAH DEPARTMENT OF TRANSPORTATION REGION ##### -- CITY, UTAH ROADWAY DESIGN							
		PROJECT NUMBER SP-0092(5)1	APPROVAL RECOMM. DATE PROJECT DESIGN ENGINEER	DESIGN	CHECK	REVIEW	NO.	DATE	DESIGN REV.BY / MAPS CORR.BY / PARCELS AFFECTED / REQUEST BY	REMARKS
			APPROVED FOR USE BY UDOT DATE PRECONSTRUCTION ENGINEER	DRAWN	CHECK	DATE			ORIGINAL SUBMISSION FOR AUTHORIZATION	
				QUANT.	CHECK	BY	DATE		REVISIONS	

16-DEC-2004 DGN File: N:\PROJECTS\4600_05\Sheet_Files\Roadway_Design\4600_RD-02.dgn

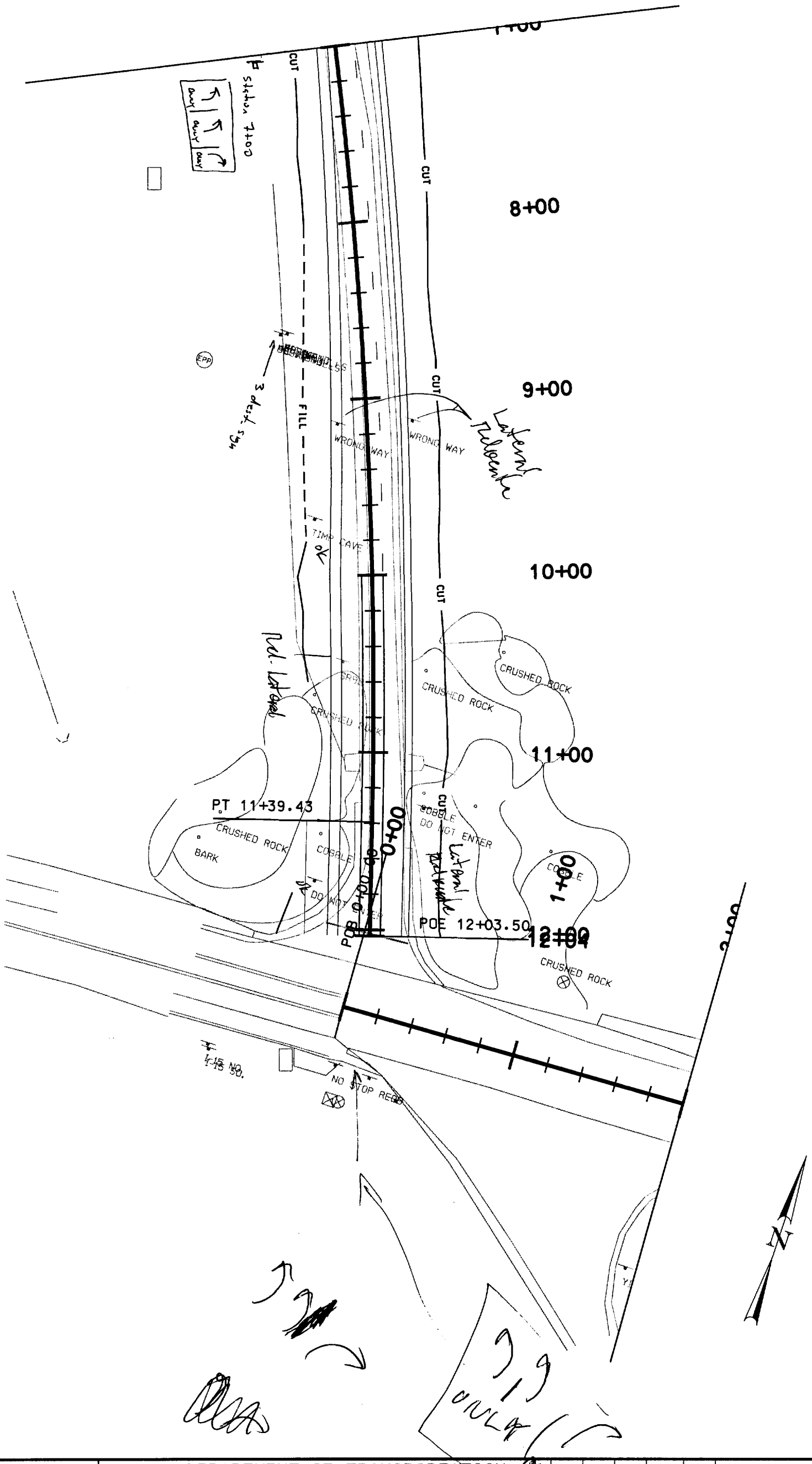

SHEET NO. RD-2	UTAH COUNTY	SR-92, EAST OF I-15	UTAH DEPARTMENT OF TRANSPORTATION								
		IN LEHI, UTAH CO.	REGION ##### -- CITY, UTAH								
		PLAN SHEET	ROADWAY DESIGN								
		PROJECT NUMBER SP-0092(5)1	APPROVAL RECOMM. DATE PROJECT DESIGN ENGINEER	DESIGN	CHECK	REVIEW	NO.	DATE	DESIGN REV.BY	MAPS CORR.BY	PARCELS AFFECTED	REQUEST BY	REMARKS
			APPROVED FOR USE BY UDOT DATE PRECONSTRUCTION ENGINEER	DRAWN	CHECK	DATE			ORIGINAL SUBMISSION FOR AUTHORIZATION				
				QUANT.	CHECK	BY	DATE		REVISIONS				

16-DEC-2004 DGN File: N:\PROJECTS\4600_05\Sheet_Files\Roadway_Design\4600_RD-03.dgn

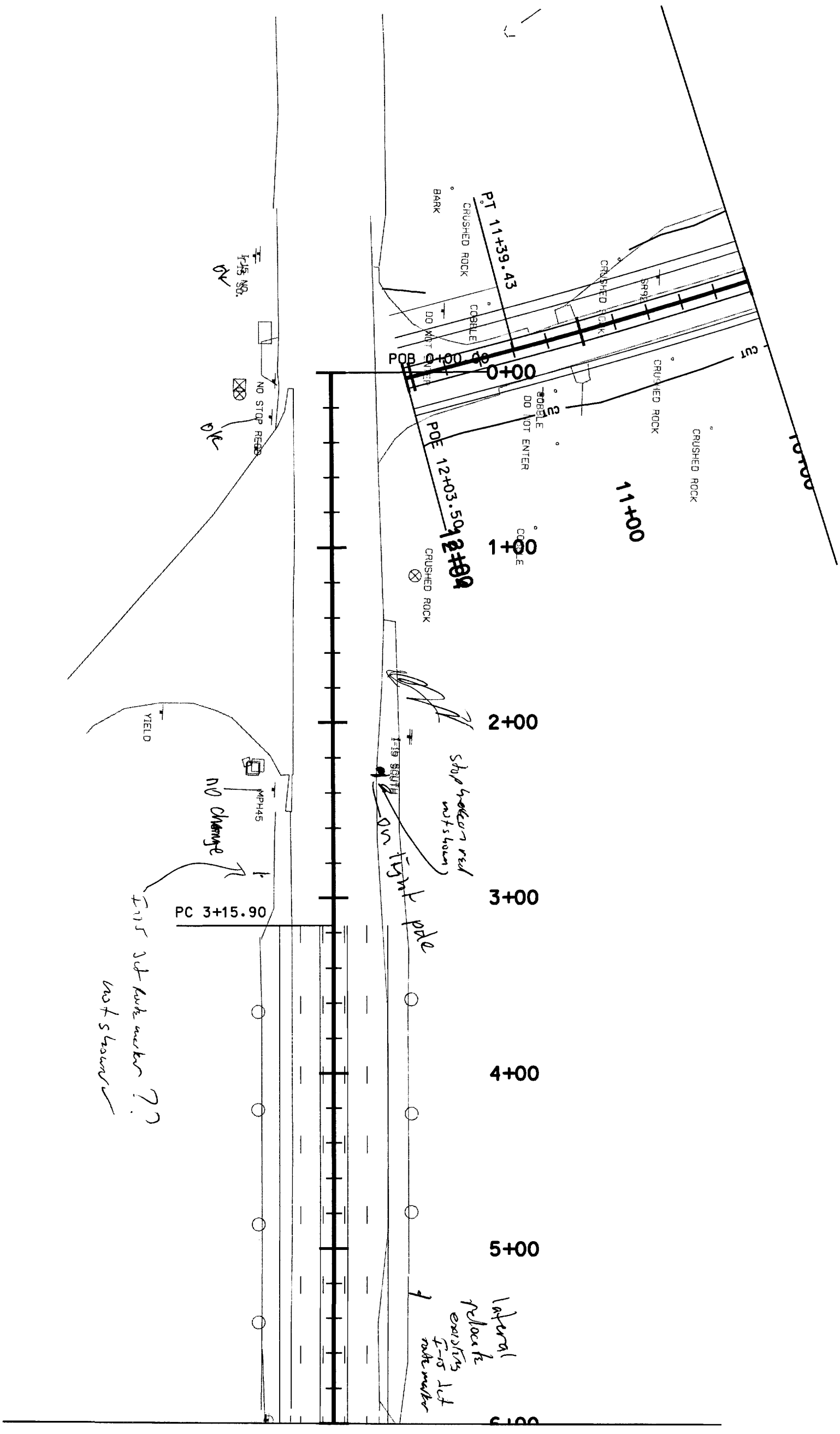

SR-92, EAST OF I-15	UTAH DEPARTMENT OF TRANSPORTATION				
IN LEHI, UTAH CO.	REGION ##### -- CITY, UTAH				
PLAN SHEET	ROADWAY DESIGN				
PROJECT NUMBER SP-0092(5)1	APPROVAL RECOMM. DATE PROJECT DESIGN ENGINEER	DESIGN	CHECK	REVIEW	
	APPROVED FOR USE BY UDOT DATE PRECONSTRUCTION ENGINEER	DRAWN	CHECK	DATE	
		QUANT.	CHECK	BY	

NO.	DATE	DESIGN REV. BY	MAPS CORR. BY	PARCELS AFFECTED	REQUEST BY	REMARKS
		ORIGINAL SUBMISSION FOR AUTHORIZATION				
DATE		REVISIONS				

SHEET NO. RD-3

UTAH COUNTY

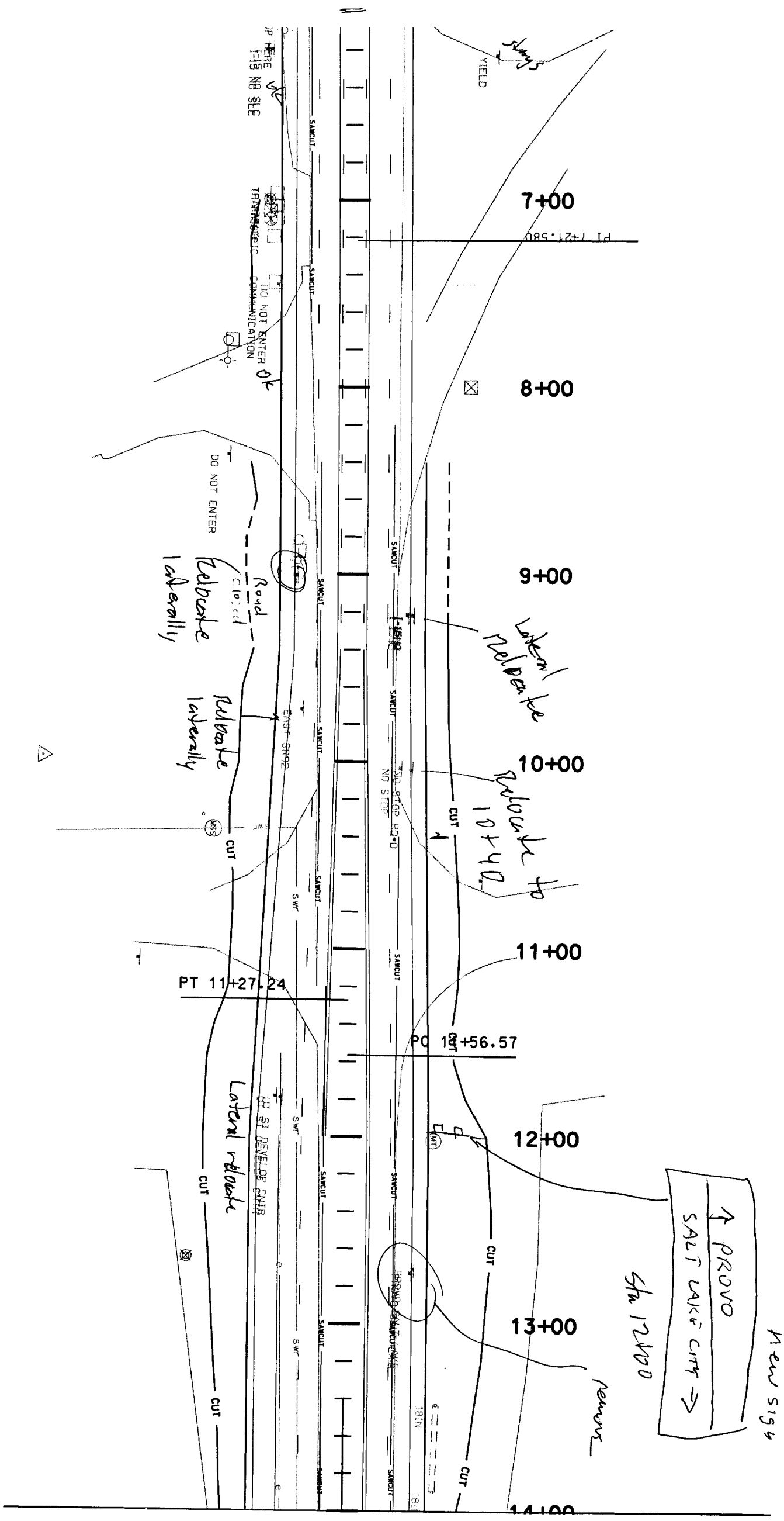

SR-92, EAST OF I-15	UTAH DEPARTMENT OF TRANSPORTATION						
IN LEHI, UTAH CO.	REGION ##### -- CITY, UTAH						
PLAN SHEET	ROADWAY DESIGN						
PROJECT NUMBER SP-0092(5)1	APPROVAL RECOMM. DATE PROJECT DESIGN ENGINEER	DESIGN	CHECK	REVIEW	NO.	DATE	REMARKS
	APPROVED FOR USE BY UDOT DATE PRECONSTRUCTION ENGINEER	DRAWN	CHECK	DATE			ORIGINAL SUBMISSION FOR AUTHORIZATION
		QUANT.	CHECK	BY	DATE		REVISIONS

UTAH COUNTY

SHEET NO. RD-4

SR-92, EAST OF I-15	UTAH COUNTY	PROJECT NUMBER	SP-0092(5)1
IN LEHI, UTAH CO.		APPROVAL RECOMM.	DATE / PROJECT DESIGN ENGINEER
PLAN SHEET		APPROVED FOR USE BY UDOT	DATE / PRECONSTRUCTION ENGINEER
	SHEET NO. RD-5		

UTAH DEPARTMENT OF TRANSPORTATION
REGION ##### -- CITY, UTAH
ROADWAY DESIGN

DESIGN	CHECK	REVIEW
DRAWN	CHECK	DATE
QUANT.	CHECK	BY

NO.	DATE	DESIGN REV.BY	MAPS CORR.BY	PARCELS AFFECTED	REQUEST BY	REMARKS

ORIGINAL SUBMISSION FOR AUTHORIZATION

REVISIONS DATE

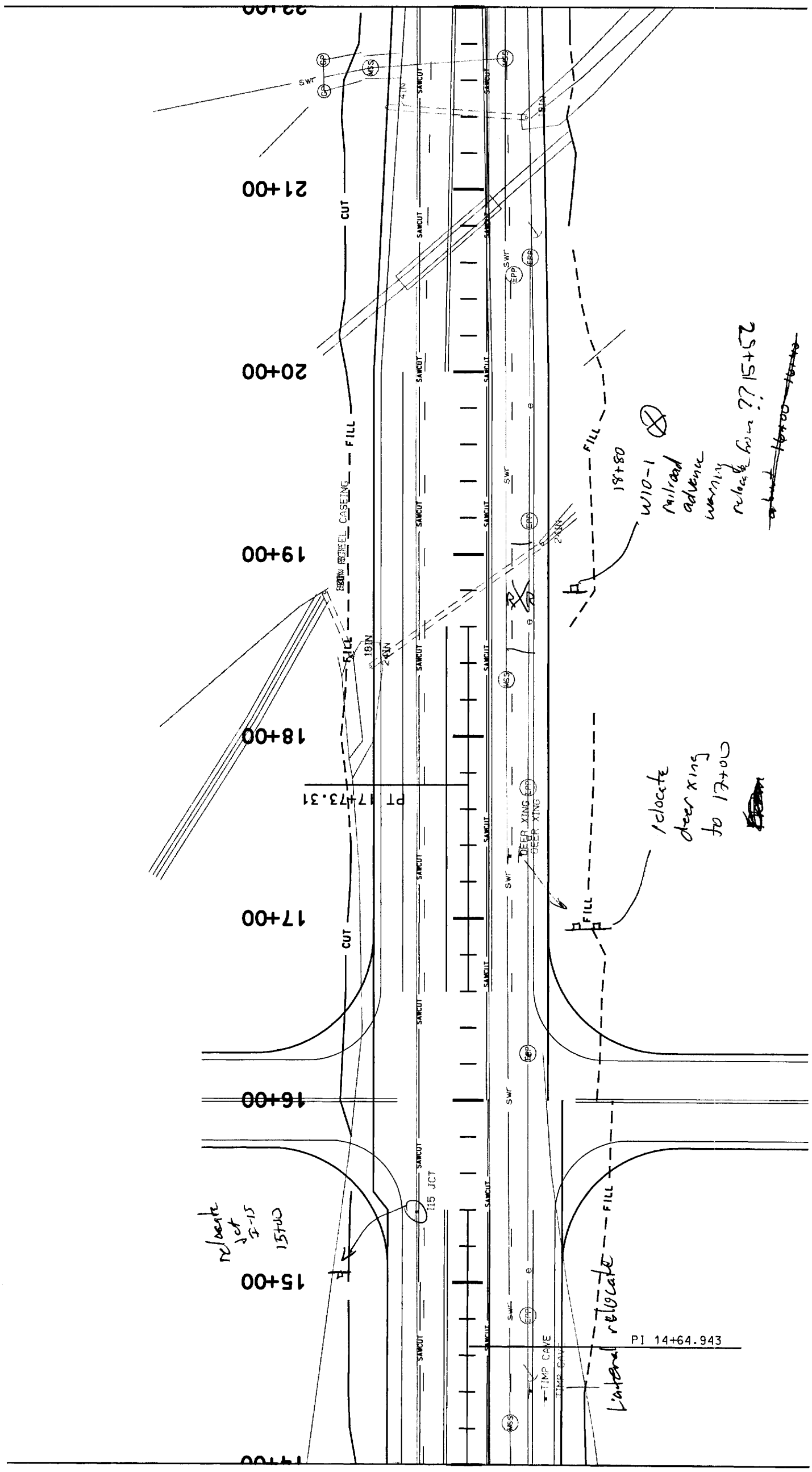

DGN File:N:\PROJECTS\4600_05\Sheet_Files\Roadway_Design\4600_RD-05.dgn 16-DEC-2004

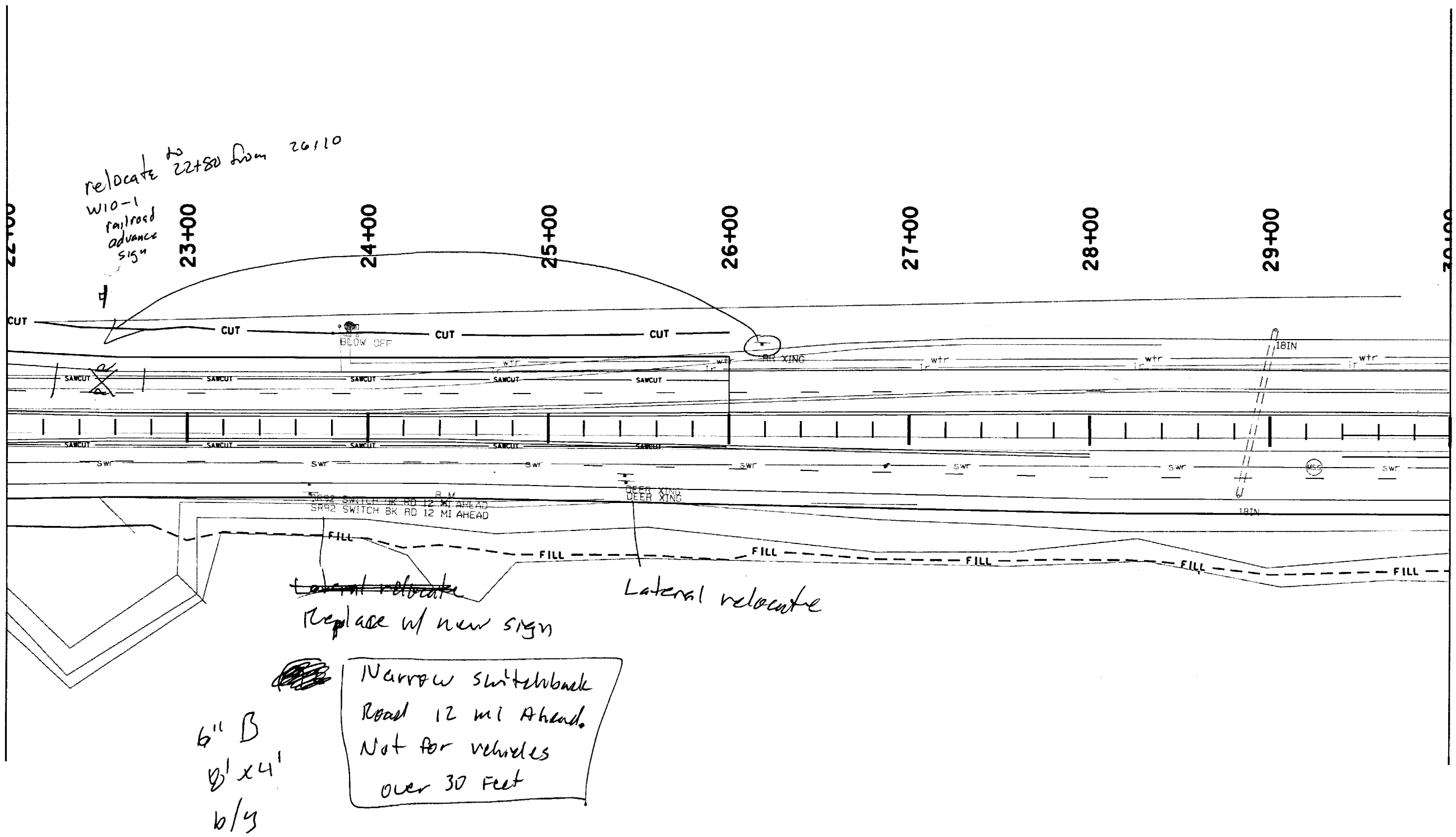

UTAH DEPARTMENT OF TRANSPORTATION
REGION ##### -- CITY, UTAH
ROADWAY DESIGN

SR-92, EAST OF I-15
IN LEHI, UTAH CO.

PLAN SHEET

PROJECT NUMBER SP-0092(5)1

UTAH
COUNTY

SHEET NO. RD-6

NO.	DATE	DESIGN REV. BY	MAPS CORR. BY	PARCELS AFFECTED	REQUEST BY	REMARKS

ORIGINAL SUBMISSION FOR AUTHORIZATION

REVISIONS

DATE

REVIEW

DATE

BY

DESIGN

DRAWN

QUANT.

CHECK

CHECK

CHECK

APPROVAL RECOMM. DATE PROJECT DESIGN ENGINEER

APPROVED FOR USE BY UDOT DATE PRECONSTRUCTION ENGINEER

16-DEC-2004 DGN File: N:\PROJECTS\4600.05\Sheet_Files\Roadway_Design\4600_RD-06.dgn

16-DEC-2004 DGN File: N:\PROJECTS\4600_05\Sheet_Files\Roadway_Design\4600_RD-07.dgn

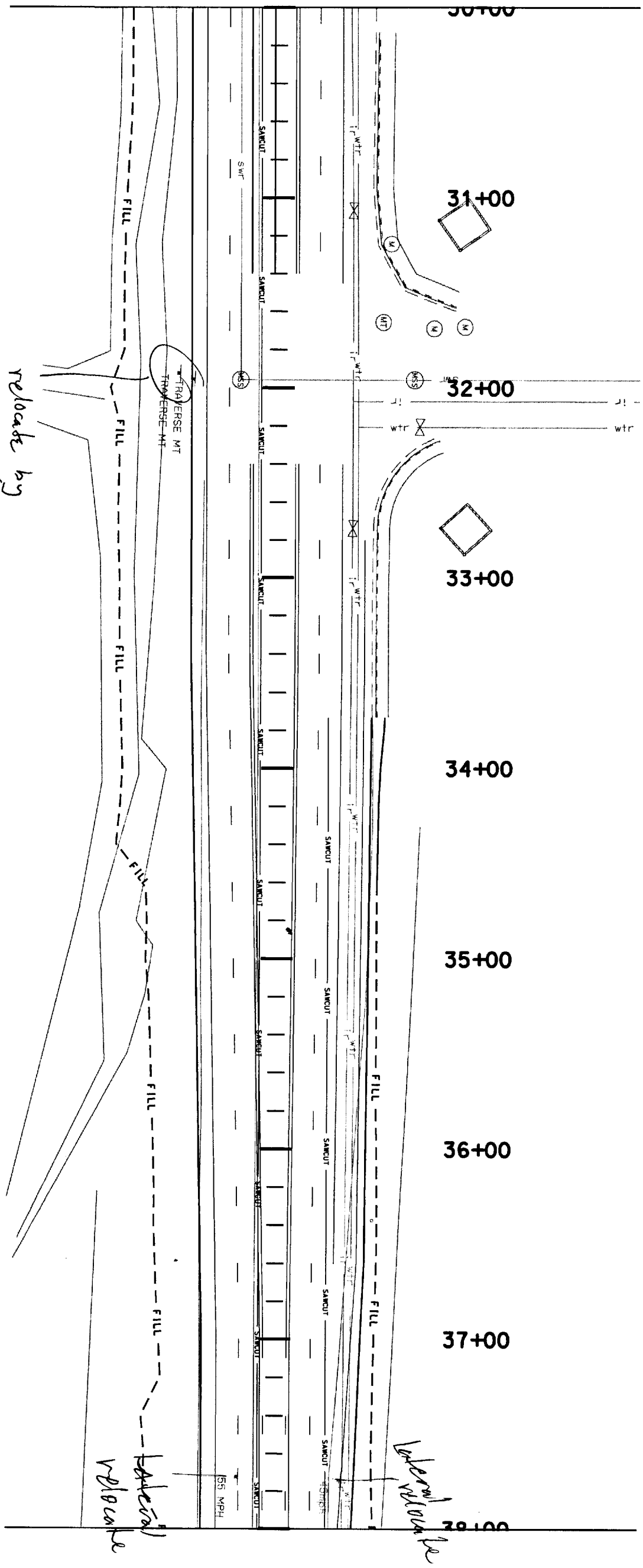

SR-92, EAST OF I-15	UTAH DEPARTMENT OF TRANSPORTATION		
IN LEHI, UTAH CO.	REGION ##### -- CITY, UTAH		
PLAN SHEET	ROADWAY DESIGN		
PROJECT NUMBER SP-0092(5)1	APPROVAL RECOMM. DATE PROJECT DESIGN ENGINEER	DESIGN / CHECK	REVIEW
	APPROVED FOR USE BY UDOT DATE PRECONSTRUCTION ENGINEER	DRAWN / CHECK	DATE
		QUANT. / CHECK	BY

NO.	DATE	DESIGN REV. BY	MAPS CORR. BY	PARCELS AFFECTED	REQUEST BY	REMARKS
		ORIGINAL SUBMISSION FOR AUTHORIZATION				
DATE	REVISIONS					

SHEET NO. RD-7 UTAH COUNTY

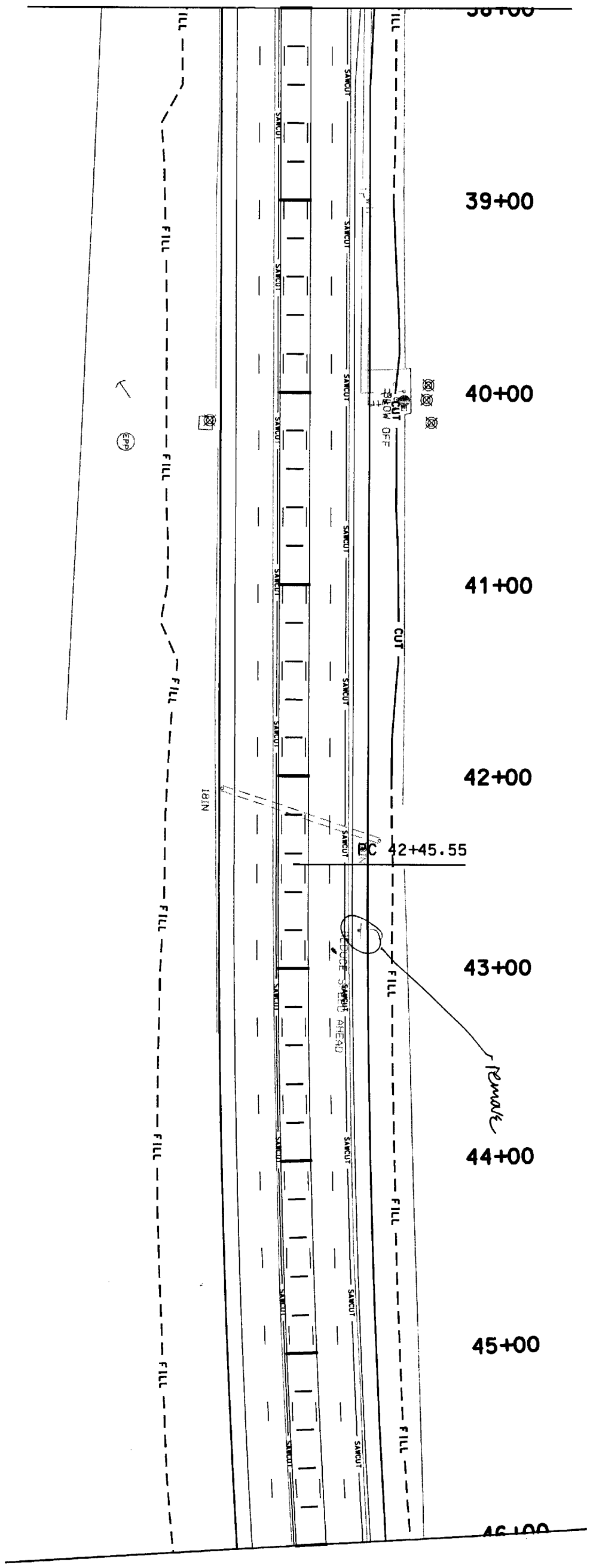

SR-92, EAST OF I-15	UTAH DEPARTMENT OF TRANSPORTATION		
IN LEHI, UTAH CO.	REGION ##### -- CITY, UTAH		
PLAN SHEET	ROADWAY DESIGN		
PROJECT NUMBER SP-0092(5)1	APPROVAL RECOMM. DATE PROJECT DESIGN ENGINEER	DESIGN / CHECK / REVIEW	
	APPROVED FOR USE BY UDOT DATE PRECONSTRUCTION ENGINEER	DRAWN / CHECK / DATE	
		QUANT. / CHECK / BY	

NO.	DATE	DESIGN REV. BY	MAPS CORR. BY	PARCELS AFFECTED	REQUEST BY	REMARKS
		ORIGINAL SUBMISSION FOR AUTHORIZATION				

DATE REVISIONS

UTAH COUNTY

SHEET NO. RD-8

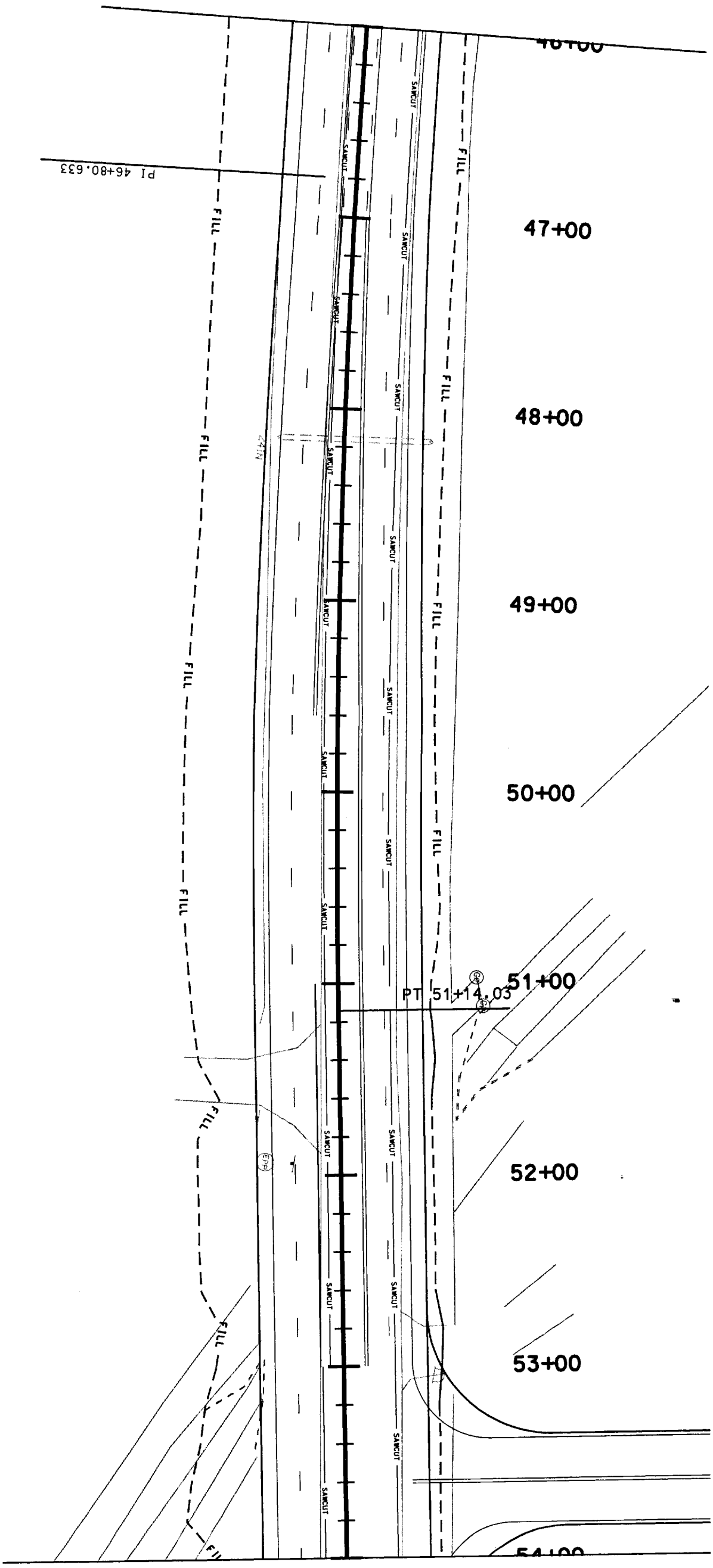

SR-92, EAST OF I-15	UTAH DEPARTMENT OF TRANSPORTATION		
IN LEHI, UTAH CO.	REGION ##### -- CITY, UTAH		
PLAN SHEET	ROADWAY DESIGN		
PROJECT NUMBER SP-0092(5)1	APPROVAL RECOMM. DATE PROJECT DESIGN ENGINEER	DESIGN / CHECK	REVIEW
	APPROVED FOR USE BY UDOT DATE PRECONSTRUCTION ENGINEER	DRAWN / CHECK	DATE
		QUANT. / CHECK	BY

NO.	DATE	DESIGN REV. BY	MAPS CORR. BY	PARCELS AFFECTED	REQUEST BY	REMARKS
		ORIGINAL SUBMISSION FOR AUTHORIZATION				
DATE		REVISIONS				

UTAH COUNTY

SHEET NO. RD-9

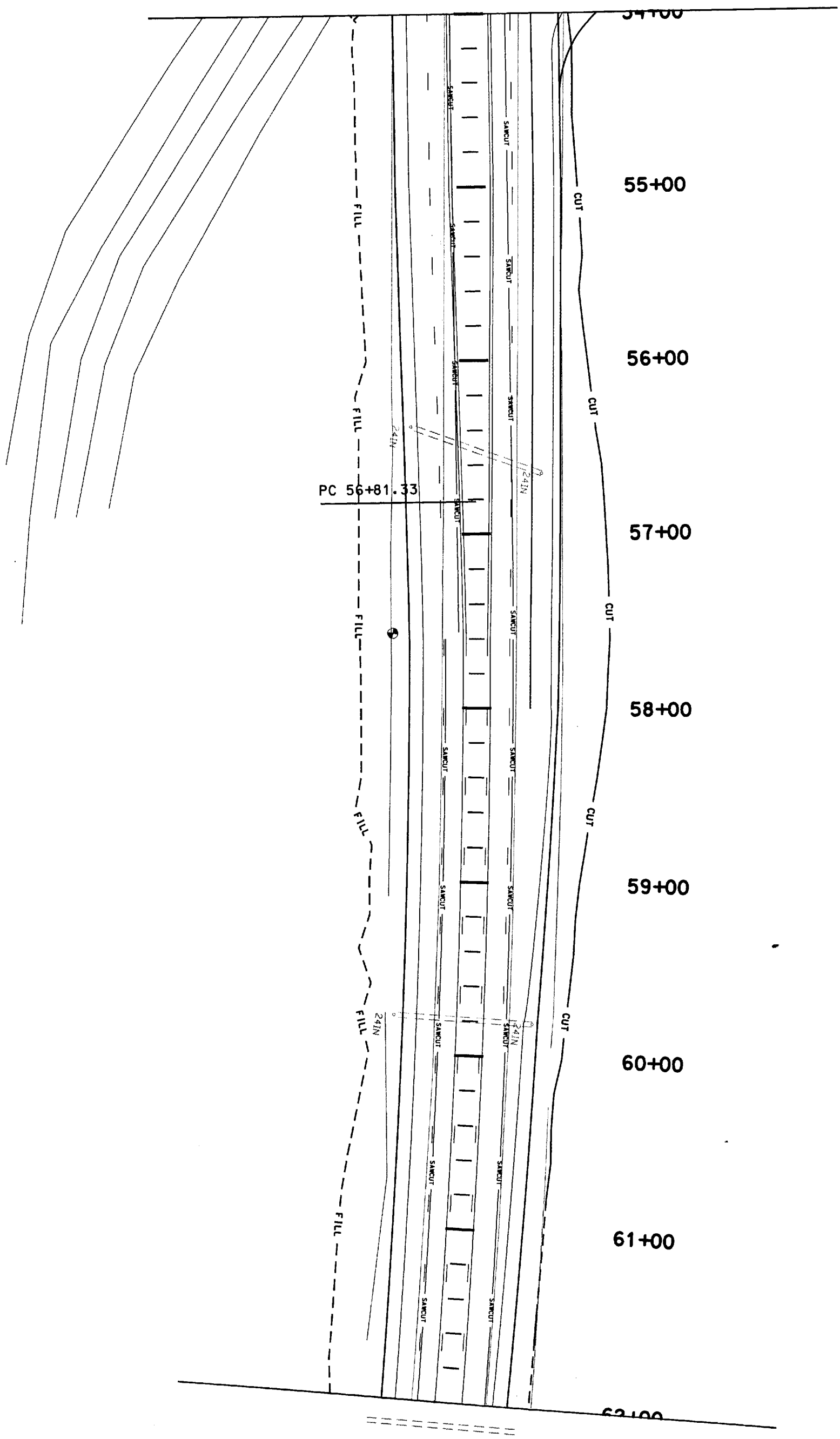

SR-92, EAST OF I-15	UTAH DEPARTMENT OF TRANSPORTATION		
IN LEHI, UTAH CO.	REGION ##### -- CITY, UTAH		
PLAN SHEET	ROADWAY DESIGN		
PROJECT NUMBER SP-0092(5)1	APPROVAL RECOMM. DATE PROJECT DESIGN ENGINEER	DESIGN / CHECK	REVIEW
	APPROVED FOR USE BY UDOT DATE PRECONSTRUCTION ENGINEER	DRAWN / CHECK	DATE
		QUANT. / CHECK	BY

NO.	DATE	DESIGN REV. BY	MAPS CORR. BY	PARCELS AFFECTED	REQUEST BY	REMARKS
		ORIGINAL SUBMISSION FOR AUTHORIZATION				

DATE REVISIONS

UTAH COUNTY

SHEET NO. RD-10

16-DEC-2004 DGN File: N:\PROJECTS\4600_05\Sheet_Files\Roadway_Design\4600_RD-11.dgn

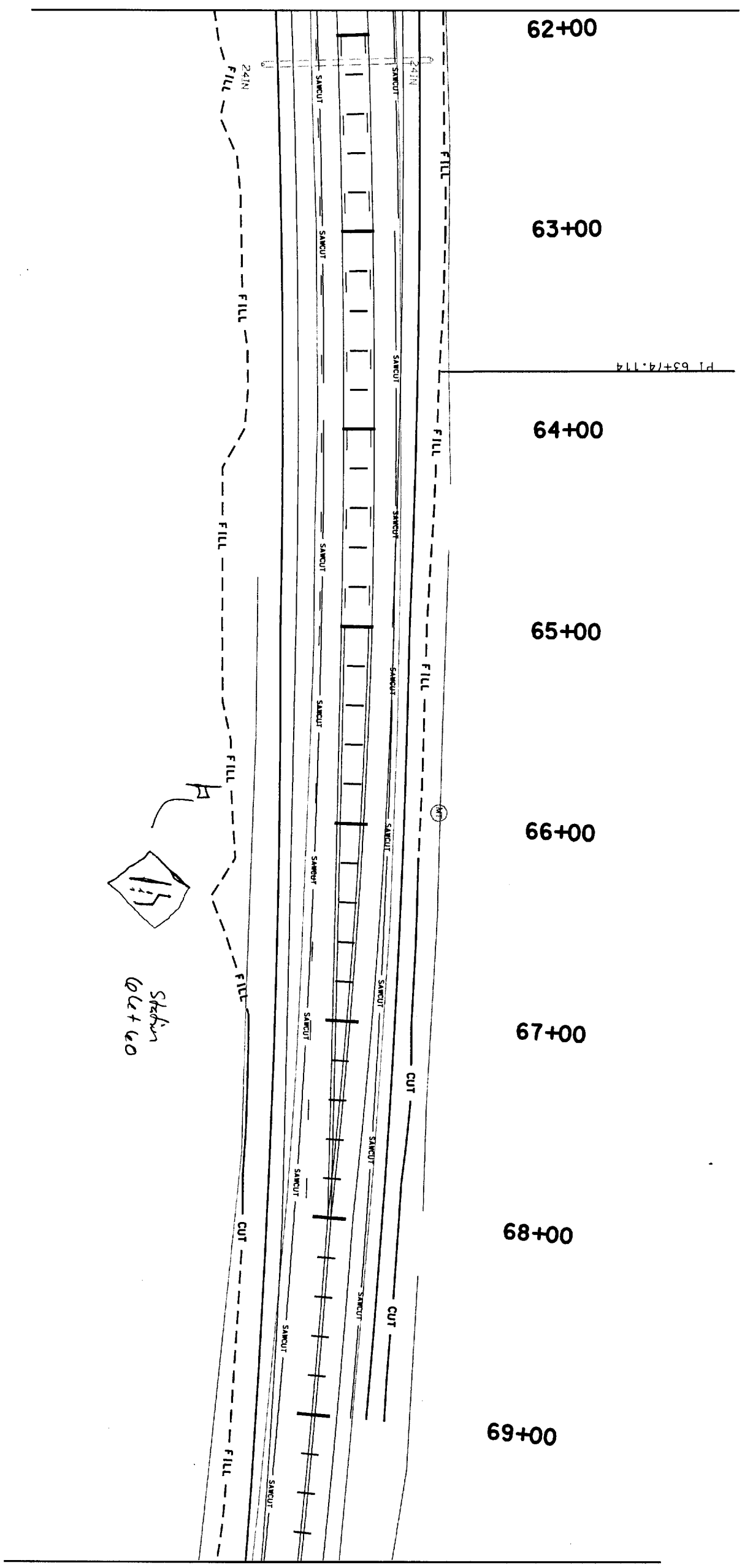

SR-92, EAST OF I-15	UTAH DEPARTMENT OF TRANSPORTATION				
IN LEHI, UTAH CO.	REGION ##### -- CITY, UTAH				
PLAN SHEET	ROADWAY DESIGN				
PROJECT NUMBER SP-0092(5)1	APPROVAL RECOMM. ____ DATE ____ PROJECT DESIGN ENGINEER	DESIGN ____	CHECK ____	REVIEW	
	APPROVED FOR USE BY UDOT ____ DATE ____ PRECONSTRUCTION ENGINEER	DRAWN ____	CHECK ____	DATE ____	
		QUANT. ____	CHECK ____	BY ____	

NO.	DATE	DESIGN REV.BY	MAPS CORR.BY	PARCELS AFFECTED	REQUEST BY	REMARKS
		ORIGINAL SUBMISSION FOR AUTHORIZATION				
DATE		REVISIONS				

UTAH COUNTY

SHEET NO. RD-11

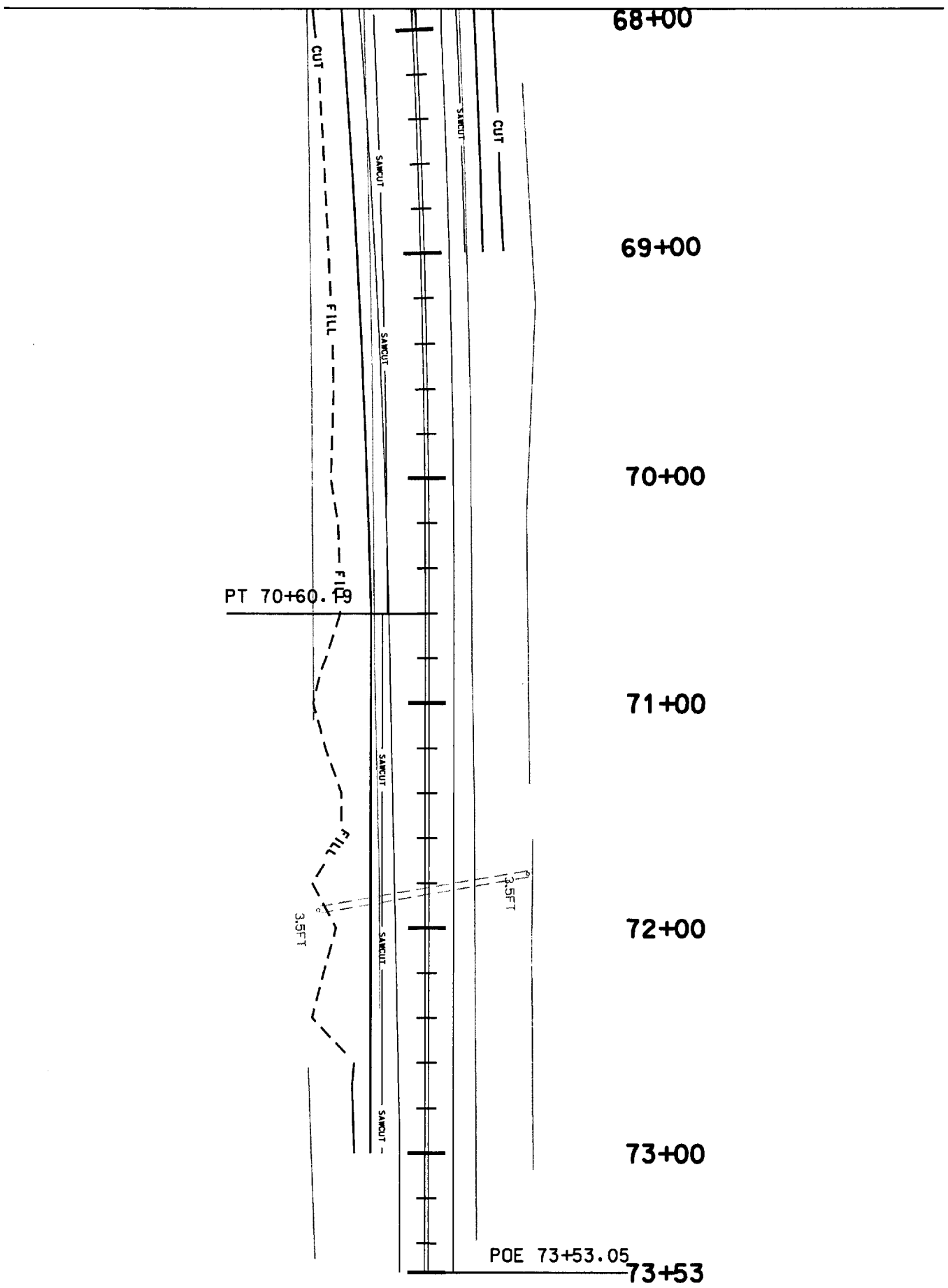

SR-92, EAST OF I-15	UTAH DEPARTMENT OF TRANSPORTATION				
IN LEHI, UTAH CO.	REGION ##### -- CITY, UTAH				
PLAN SHEET	ROADWAY DESIGN				
PROJECT NUMBER SP-0092(5)1	APPROVAL RECOMM. DATE PROJECT DESIGN ENGINEER	DESIGN	CHECK	REVIEW	
	APPROVED FOR USE BY UDOT DATE PRECONSTRUCTION ENGINEER	DRAWN	CHECK	DATE	
		QUANT.	CHECK	BY	

NO.	DATE	DESIGN REV. BY	MAPS CORR. BY	PARCELS AFFECTED	REQUEST BY	REMARKS
		ORIGINAL SUBMISSION FOR AUTHORIZATION				
DATE		REVISIONS				

SHEET NO. RD-12

UTAH COUNTY