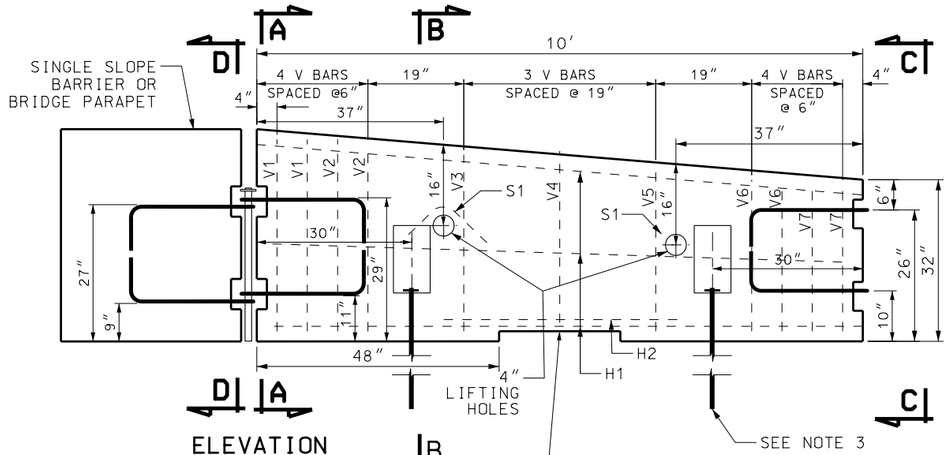

ELEVATION

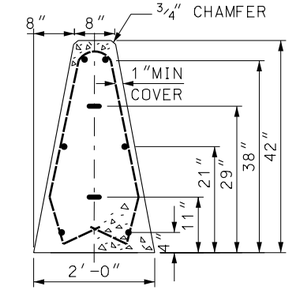

SECTION A-A

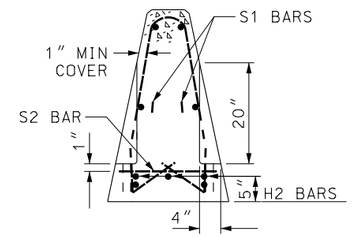

SECTION B-B

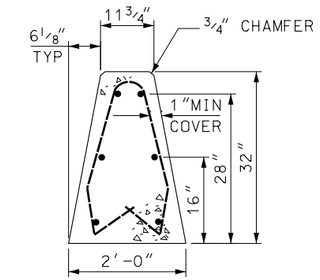

SECTION C-C

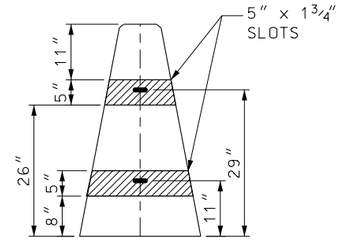

SLOT DETAIL
SECTION A-A

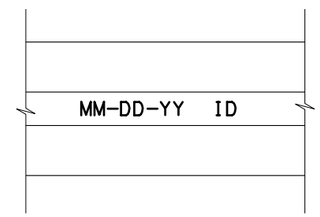

BARRIER MARKINGS
SEE NOTE 6

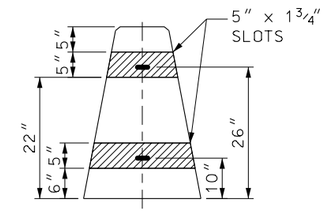

SLOT DETAIL
SECTION C-C

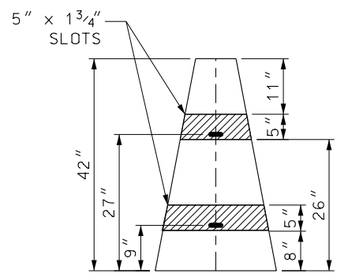

SECTION D-D

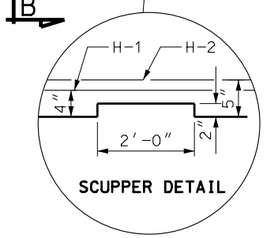

SCUPPER DETAIL

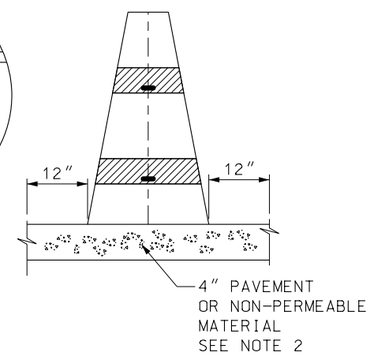

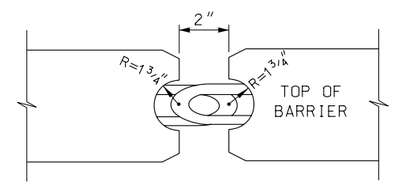

PIN ACCESS DETAIL

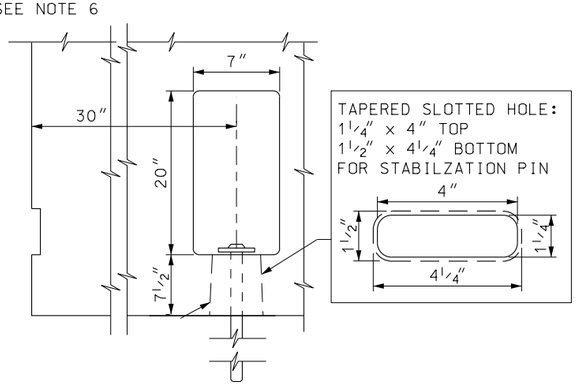

BARRIER STABILIZATION SLOT DETAIL

STEEL REINFORCEMENT TABLE

MARK	BAR SIZE	NO. OF BARS	SKETCH
H1	#5	(6) RUN THROUGH LENGTH OF BARRIER	9'-1"
H2	#5	(3) BARS CENTERED OVER SCUPPER	4'-4"
S1	#4	(2) 2 BARS CENTERED OVER EACH LIFTING HOLE	3 3/8"R, 2'-5", 90°, 1" COVER
S2	#4	(2) BARS CENTERED 1" BELOW TOP OF STABILIZATION PIN SLOTS	1 1/2"R, SLOTS, 7", 1'-6", 1" MIN CLEAR TO BAR

		#		D
V1	#5	2	(11) BARS PLACED AS PER ELEVATION DETAIL	38"
V2	#5	2		37"
V3	#5	1		35"
V4	#5	1		34"
V5	#5	1		33"
V6	#5	2		30"
V7	#5	2		29"

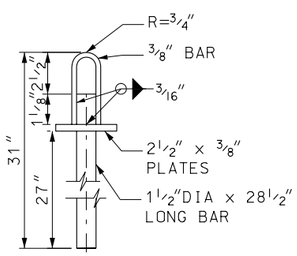

OPTION 1

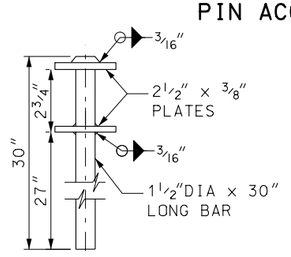

OPTION 2

GALVANIZED CONNECTION PIN
SEE NOTE 9

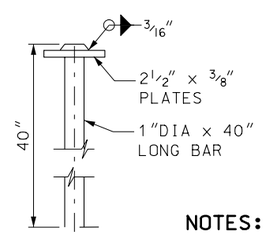

GALVANIZED STABILIZATION PIN
SEE NOTE 9

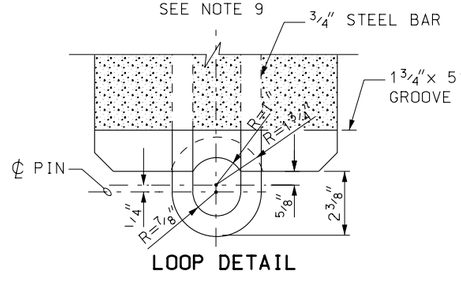

LOOP DETAIL

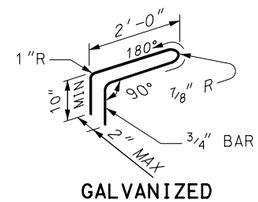

GALVANIZED STEEL BAR

CONNECTION DETAILS

NOTES:

1. TRANSITION SECTION REQUIRED WHEN A CRASH CUSHION OR W-BEAM GUARDRAIL TRANSITION IS REQUIRED ON A CONSTANT SLOPE BRIDGE PARAPET.
2. PROVIDE 4" OF PAVEMENT OR NON-PERMEABLE MATERIAL 1' IN FRONT OF AND 1' ON BOTH SIDES OF TRANSITION SECTION. PLACE TRANSITION SECTION ON TOP OF FINAL PAVEMENT COURSE.
3. ALL APPLICATIONS REQUIRE THE INSTALLATION OF STABILIZATION PINS AND CONNECTION PINS. PRE DRILL 1" HOLE THROUGH PAVEMENT SURFACE PRIOR TO INSTALLING STABILIZATION PINS.
4. USE A 4" WHITE PVC SLEEVE TO FORM THE LIFTING HOLES. LEAVE SLEEVE IN PLACE AFTER CASTING.
5. PLACE AN ADEQUATE AMOUNT OF SILICONE ADHESIVE ON BOTTOM OF WASHER BEFORE INSERTING PIN TO HOLD IN PLACE AND PREVENT EASY HAND REMOVAL.
6. MARK EACH BARRIER WITH 1 1/2" NUMBERS INDICATING THE DATE OF CASTING AND IDENTIFICATION NUMBER SUPPLIED BY THE INSPECTOR, IMPRESSED 1/4" DEEP INTO THE TOP CENTER OF THE BARRIER.
7. USE COATED REINFORCEMENT STEEL.
8. USE CLASS AA(AE) CONCRETE.
9. USE OF A HOT FORGED HEAD, MEETING PLATE SIZE AND THICKNESS IS ACCEPTABLE IN PLACE OF A WELDED PLATE.

REVISIONS

NO.	DATE	APPR.	REMARKS
1	02-24-05	G.S.	NEW DRAWING.
2	08-25-05	G.S.	ADDED NOTE 9. CORRECTED CONNECTION PIN OPTION I DIMENSIONS. CHANGED WELDING INFORMATION ON PIN DETAIL.

UTAH DEPARTMENT OF TRANSPORTATION
STANDARD DRAWINGS FOR ROAD AND BRIDGE CONSTRUCTION
SALT LAKE CITY, UTAH

RECOMMENDED FOR APPROVAL — AUG.25,2005 DATE
CHAIRMAN STANDARDS COMMITTEE APPROVED — AUG.25,2005 DATE
DEPUTY DIRECTOR

PRECAST CONCRETE CONSTANT SLOPE TRANSITION SECTION FOR CRASH CUSHION AND W-BEAM GUARDRAIL
STANDARD DRAWING TITLE

STD DWG
BA 3B

DGN File: L:\Standard Drawings\Imperial\2005Approved\ChangeMApproved\BA038.dgn
06-SEP-2005