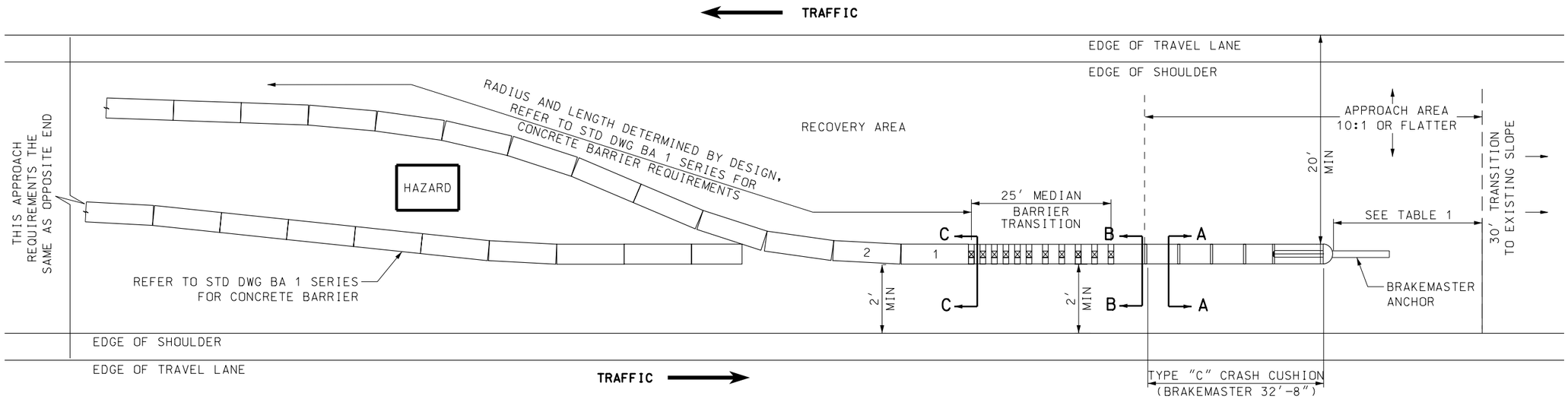

CONCRETE BARRIER INSTALLATION DETAIL

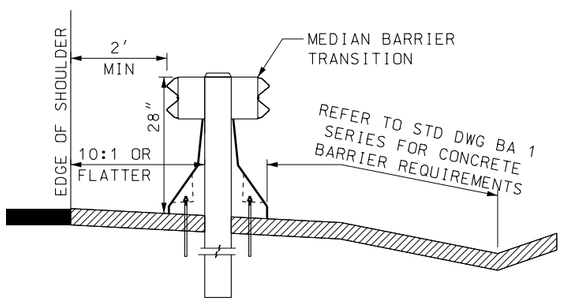

SECTION C-C

PIN BARRIER SECTION 1 AND 2 WITH STABILIZATION PINS

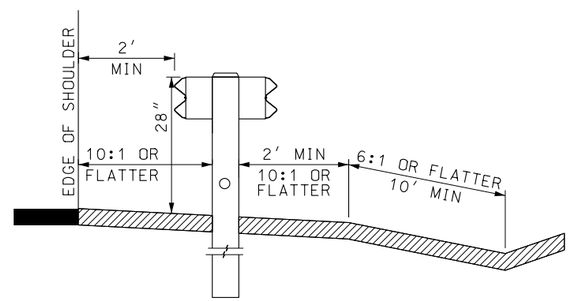

SECTION B-B

DRILL 2" HOLES IN MEDIAN BARRIER TRANSITION OR MEDIAN BARRIER AS SPECIFIED BY MANUFACTURER

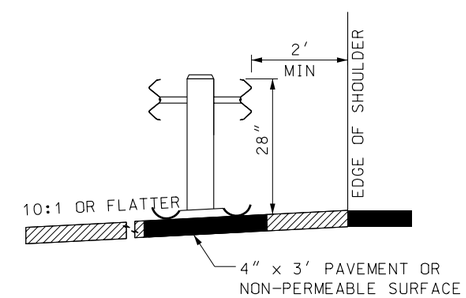

SECTION A-A

TABLE 1	
SPEED MPH	MINIMUM LENGTH FEET
LESS THAN 40	70
40 TO 55	100
60 TO 75	150

W-BEAM GUARDRAIL BARRIER INSTALLATION DETAIL

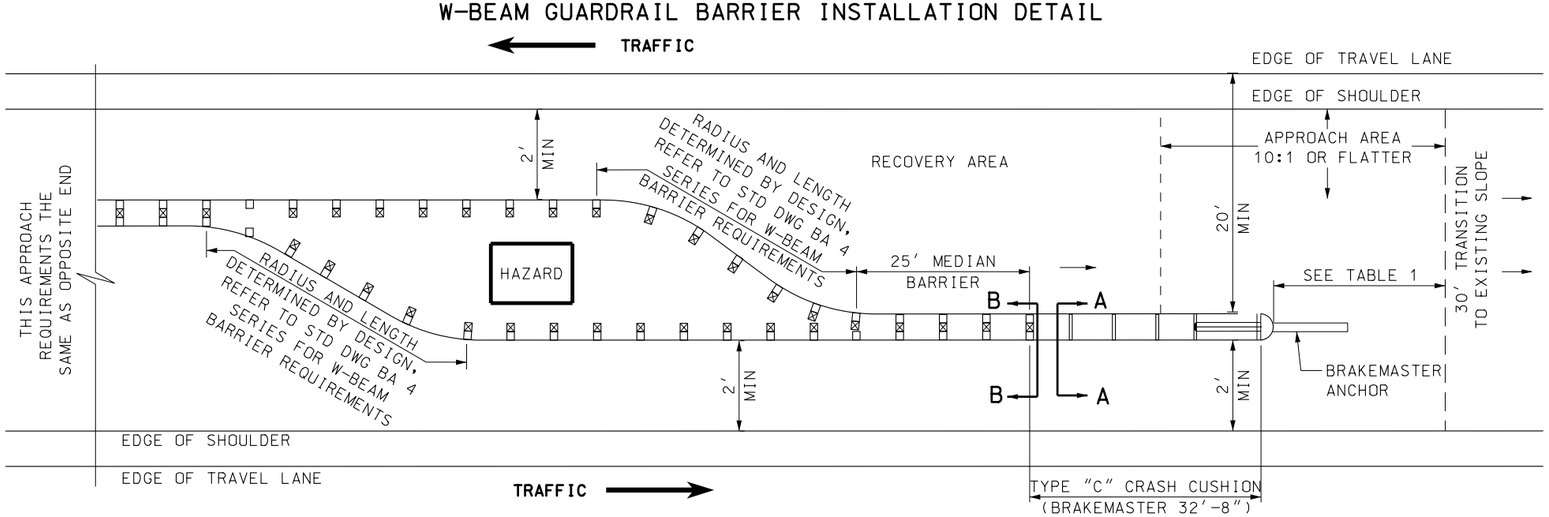

NOTES:

1. THE BRAKEMASTER, MANUFACTURED BY ENERGY ABSORPTION SYSTEM. SEE UDOT'S GUIDELINES FOR SPECIFIC SYSTEM DETAILS.
2. INSTALL SYSTEMS AS PER UDOT'S AND MANUFACTURER'S SPECIFICATIONS.
3. HAVE SHOP DRAWING AVAILABLE ON SITE FOR REFERENCE DURING INSTALLATION.
4. USE 4" NON-PERMEABLE OR PAVED SURFACE FOR BRAKEMASTER SYSTEMS.
5. COMPLETE SLOPE PREPARATION PRIOR TO INSTALLING SYSTEM.
6. CLEAR RECOVERY AND APPROACH AREAS OF ANY FIXED OBJECTS. DO NOT PLACE SIGNS OR POLES IN APPROACH AREA. SIGNS OR POLES PLACED IN THE RECOVERY AREA WILL BE BREAKAWAY AND BE A MINIMUM 10 FEET FROM SYSTEM RAIL ELEMENTS.
7. INSTALL REQUIRED MARKINGS AS PER STD DWG CC 1.

REVISIONS

NO.	DATE	APPR.	REMARKS
1	10-27-05	GS	NEW DRAWING, REPLACES CC 5 WITH CC 5A, 5B, AND 5C.

UTAH DEPARTMENT OF TRANSPORTATION
STANDARD DRAWINGS FOR ROAD AND BRIDGE CONSTRUCTION
SALT LAKE CITY, UTAH

RECOMMENDED FOR APPROVAL — OCT.27,2005 DATE
CHAIRMAN STANDARDS COMMITTEE — DATE
APPROVED — OCT.27,2005 DATE
DEPUTY DIRECTOR

GRADING AND PLACEMENT DETAILS CRASH CUSHION TYPE C BRAKEMASTER

STANDARD DRAWING TITLE

STD DWG
CC 5A

DGN File:L:\Standard Drawings\Imperial\2005Approved\xChange5\Approved\CC05A.dgn
18-NOV-2005