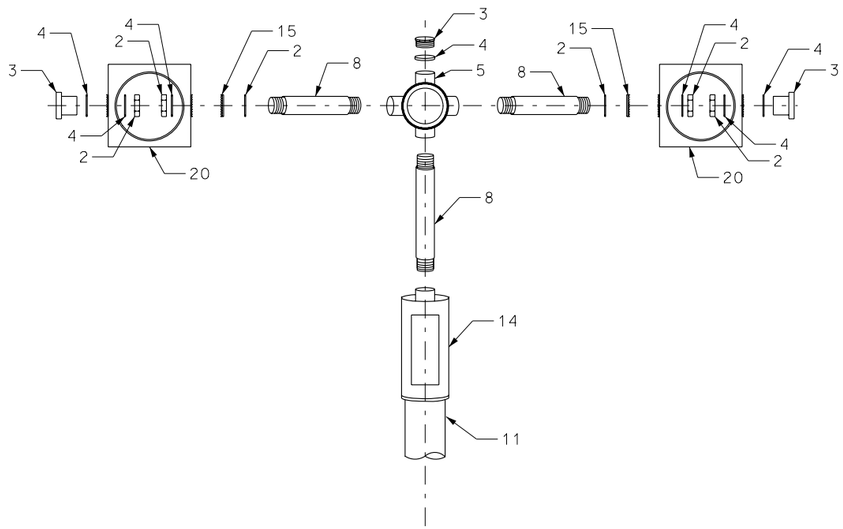

A
AT 4
ADVANCE FLASHING BEACON
SIGNAL HEAD MOUNTING DETAILS

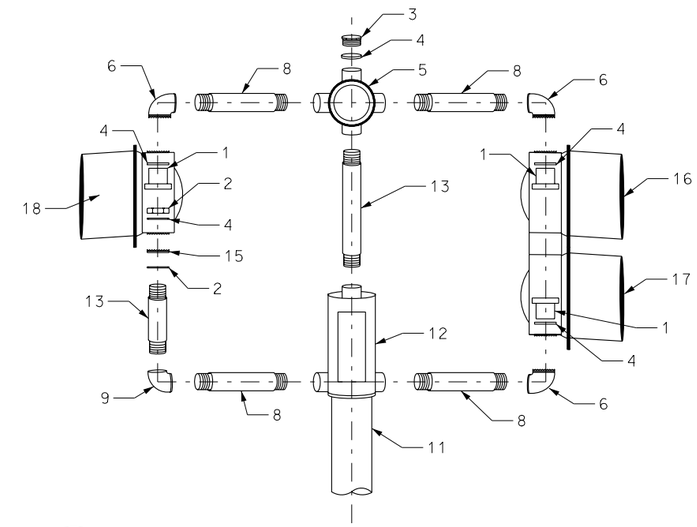

B
AT 4
TOP SIGNAL HEAD MOUNTING DETAILS
WITH ENFORCEMENT INDICATION

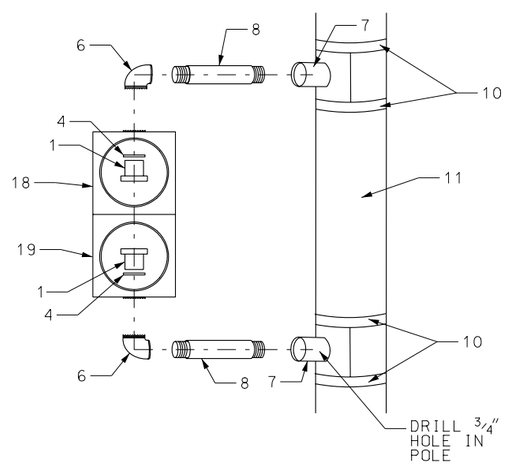

C
AT 4
SIDE SIGNAL HEAD MOUNTING DETAILS

DETAIL LEGEND

1. LOCK NIPPLE, BRASS, $1\frac{1}{2}''$ x $1\frac{3}{4}''$
2. LOCK NUT, BRASS, $1\frac{1}{2}''$
3. CAP, ORNAMENTAL, LONG, BRASS, $1\frac{1}{2}''$ x $1\frac{3}{4}''$
4. WASHER, STAINLESS STEEL
5. HUB, CENTER W/COVER PLATE 4-WAY, BRASS
6. ELBOW, 90°, GAVANIZED, THREADED INSIDE, $1\frac{1}{2}''$ SERRATED
7. ROUND POLE PLATE, GALVANNIZED
8. PIPE, GALVANIZED, THREADED BOTH ENDS, $1\frac{1}{2}''$ x 12",
9. ELBOW, 90°, GALVANIZED, THREADED INSIDE, $1\frac{1}{2}''$
10. BANDS, STAINLESS STEEL, $\frac{3}{4}''$
11. POLE SHAFT
12. POST TOP TERMINAL COMPARTMENT, 2 WAY, BRASS, WITH NO TERMINAL BLOCK
13. PIPE, GALVANIZED, LENGTH VARIABLE, THREADED BOTH ENDS, $1\frac{1}{2}''$
14. POST TOP TERMINAL COMPARTMENT, BRASS, WITH NO TERMINAL BLOCK
15. WASHER, SERRATED, $1\frac{1}{2}''$
16. SIGNAL HEAD - RED LED, 12"
17. SIGNAL HEAD - GREEN LED, 12"
18. SIGNAL HEAD - RED LED, 8"
19. SIGNAL HEAD - GREEN LED, 8"
20. SIGNAL HEAD - AMBER LED, 8"

NOTE:

1. ALL EXTERIOR SURFACES TO BE POWDER COATED YELLOW.

REVISIONS

NO.	DATE	APPR.	REMARKS
1	04/28/05	S.S.	UPDATED AND REARANGED DETAILS.

UTAH DEPARTMENT OF TRANSPORTATION
STANDARD DRAWINGS FOR ROAD AND BRIDGE CONSTRUCTION
SALT LAKE CITY, UTAH

RECOMMENDED FOR APPROVAL — APR.28.2005 DATE
CHAIRMAN STANDARDS COMMITTEE APPROVED — APR.28.2005 DATE
DEPUTY DIRECTOR

TYPICAL RAMP METER SIGNAL HEAD MOUNTING

STANDARD DRAWING TITLE

STD DWG
AT 4

10-MAY-2005 DGN File:L:\Standard Drawings\Imperial\2005\Approved\xChange2\Approved\sa04.dgn