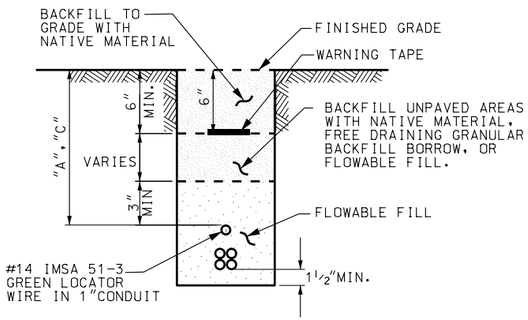

A / AT 6 1-D MULTIDUCT CONDUIT

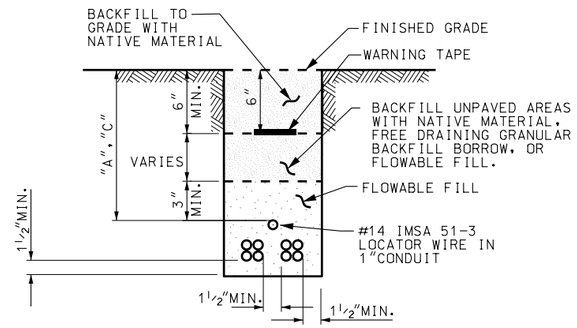

B / AT 6 2-D MULTIDUCT CONDUIT

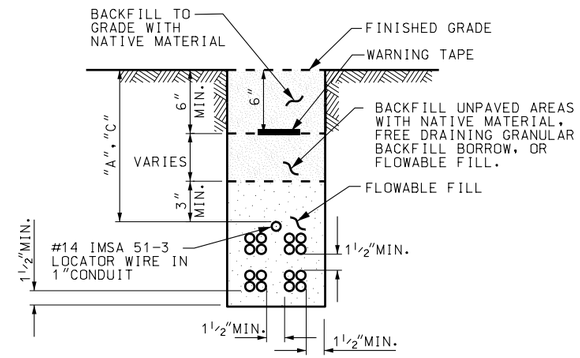

C / AT 6 4-D MULTIDUCT CONDUIT

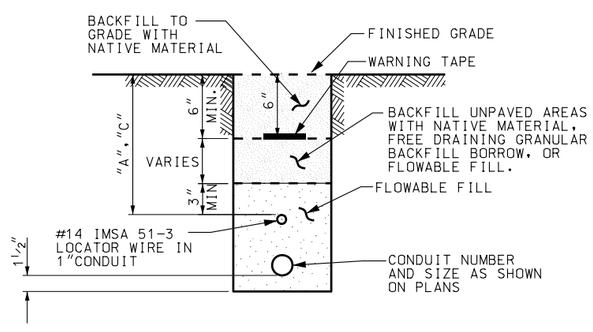

D / AT 6 NON-MULTIDUCT CONDUIT

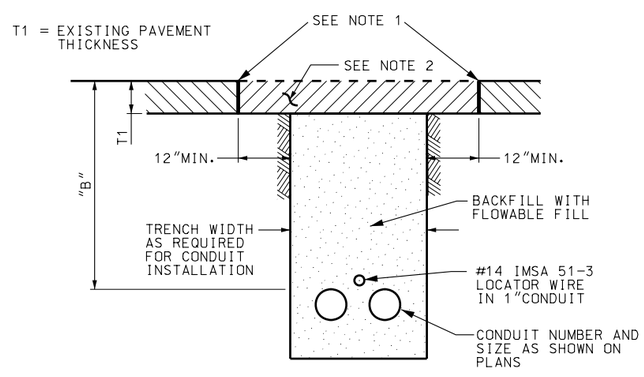

E / AT 6 CONDUIT TRENCHED IN ASPHALT PAVEMENT RESTORED WITH T PATCH

TABLE 1. T PATCH RESTORATION

EXISTING ASPHALT PAVEMENT THICKNESS (T1) IN INCHES	RESTORATION T PATCH THICKNESS IN INCHES
0 - 3½	3½
3½ - 7	MATCH EXISTING DEPTH
7 OR GREATER	7

TABLE 2. MINIMUM CONDUIT DEPTH

	DEPTH IN INCHES	AREA
A	36	OUTSIDE 20 FT OF PAVEMENT EDGE
B	36	HIGHWAY RIGHT OF WAY UNDER ASPHALT PAVEMENT SURFACE
C	60	WITHIN 20 FT OF PAVEMENT EDGE

NOTES:

1. SAW CUT PAVEMENT EDGES. APPLY A HOT-POUR RUBBERIZED ASPHALT JOINT SEALANT OR APPROVED EQUAL, APPLIED AFTER PATCH IS INSTALLED.
2. USE HMA MATERIAL FOR T-PATCH. USE OPEN GRADED SEAL COAT IS REQUIRED FOR PATCHES GREATER THAN 12 FEET WIDE, AND WHERE OPEN GRADED SEAL COAT EXISTS.

REVISIONS

NO.	DATE	APPR.	REMARKS
1	2/24/05	S.S.	REVISED MULTI-DUCT CONFIG AND T-PATCH REQUIREMENTS.

UTAH DEPARTMENT OF TRANSPORTATION
STANDARD DRAWINGS FOR ROAD AND BRIDGE CONSTRUCTION
SALT LAKE CITY, UTAH

RECOMMENDED FOR APPROVAL FEB.24,2005
CHAIRMAN STANDARDS COMMITTEE
APPROVED FEB.24,2005
DEPUTY DIRECTOR

CONDUIT DETAILS
STANDARD DRAWING TITLE

STD DWG
AT 6

DGN File: N:\Esd\Standard_Drawings\Imperial\2005Approved\Changed\Approved\sa06.dgn
14-MAR-2005