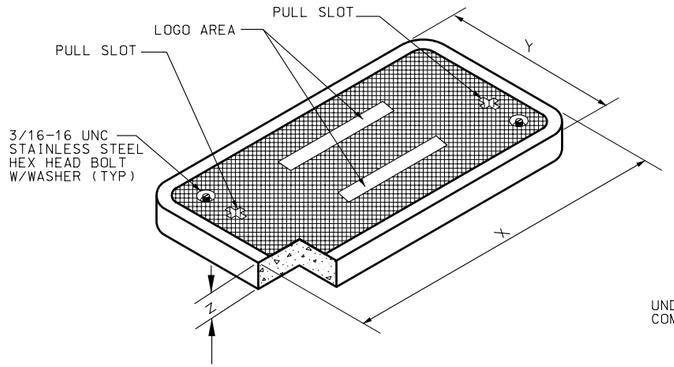

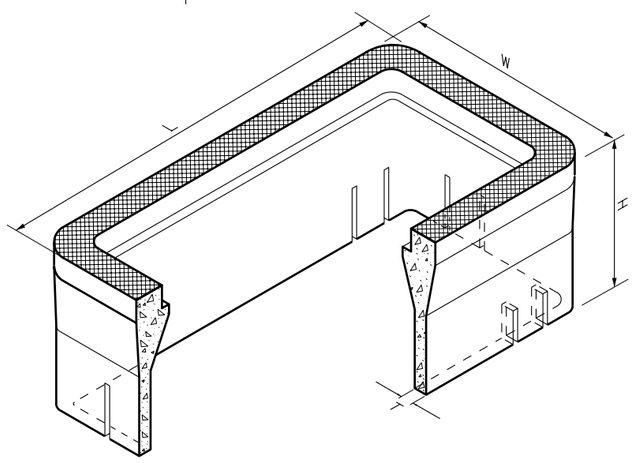

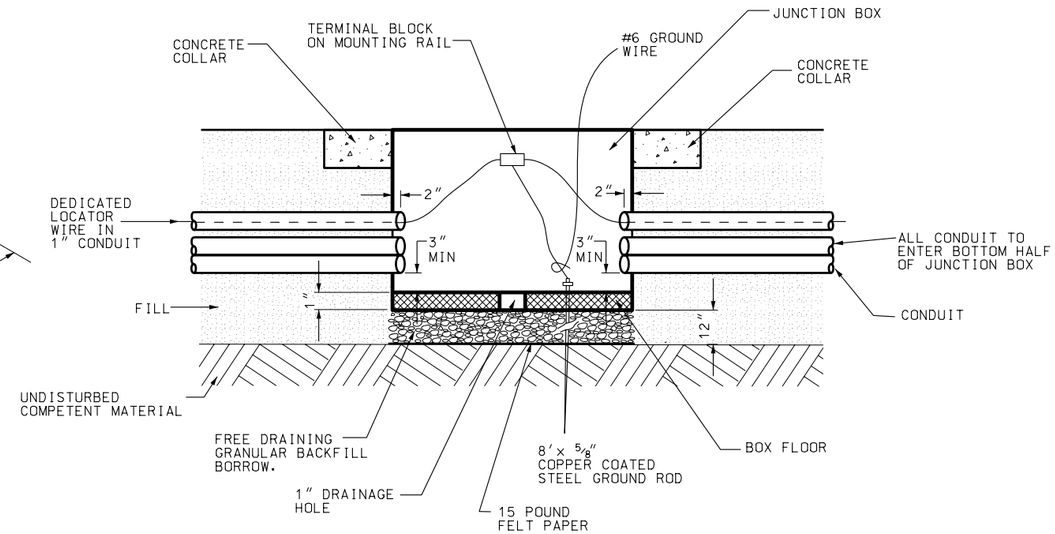

JUNCTION BOX CONDUIT PENETRATION DETAIL

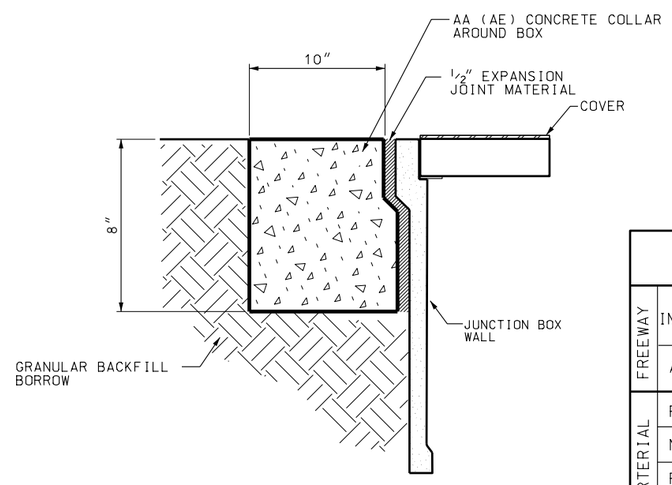

JUNCTION BOX CONCRETE COLLAR DETAIL

BOX AND LID DIMENSIONS

BOX TYPE	"L" inch	"W" inch	"H" inch	"T" inch	"X" inch	"Y" inch	"Z" inch
I-PC	25	16	24	1 1/2	23 1/4	13 3/4	2
II-PC	37 5/8	26	24	1 1/2	35 5/8	24	3
III-PC	49 5/8	32 1/8	24	2	47 5/8	30 1/8	3

NOTES:

1. STAMP BOX LOGO INTO THE LID FROM THE FACTORY. (SEE SECTION 13554).
2. DO NOT PLACE JUNCTION BOXES IN THE TRAVELED-WAY OR ON FREEWAY SHOULDERS.
3. CONCRETE COLLAR WIDTH VARIES WHEN ADJACENT TO ATMS CABINETS. SEE STD. DWG. AT 8.
4. PROVIDE CONCRETE COLLARS IN ALL LOCATIONS EXCEPT WITHIN PAVED AREAS.
5. INSTALL CORRECTLY SIZED CONDUIT PLUG IN EACH CONDUIT ENTERING THE JUNCTION BOX.

TABLE 1. FREEWAY AND ARTERIAL STREET APPLICATIONS

	APPLICATION	LOAD RATING 1
FREEWAY	INCIDENTAL TRAFFIC: PAVED GORE, PAVED AREA BEHIND SHOULDER	X
FREEWAY	ALL OTHER AREAS	X
ARTERIAL	PAVED SHOULDER OUT OF TRAFFIC	X
ARTERIAL	NON-RAISED MEDIAN, INDUSTRIAL/COMMERCIAL DRIVEWAYS	X
ARTERIAL	PARKWAY/SIDEWALK, BEHIND SIDEWALK	X
ARTERIAL	ALL OTHER AREAS	X

TABLE 2. JUNCTION BOX LID STATIC VERTICAL LOAD RATING

LOAD RATING	MINIMUM DESIGN LOAD (lb)	MINIMUM TEST LOAD (lb)	TEST AREA (inch)
1	16,000	33,500	10 x 20

REVISIONS

NO.	DATE	APPR.	REMARKS
1	2/24/05	S.S.	REMOVED LOAD 3 RATING BOXES AND REVISED DESIGN & TEST LOAD RATINGS.
2	02/23/06	L.M.	TABLE 1 AND TABLE 2 CHANGED TO ELIMINATE LOAD RATING 2, FREEWAY AND ARTERIAL APPLICATION DETAILS REMOVED.

UTAH DEPARTMENT OF TRANSPORTATION
STANDARD DRAWINGS FOR ROAD AND BRIDGE CONSTRUCTION
SALT LAKE CITY, UTAH

RECOMMENDED FOR APPROVAL — FEB.23,2006 DATE
CHAIRMAN STANDARDS COMMITTEE
APPROVED — FEB.23,2006 DATE
DEPUTY DIRECTOR

POLYMER-CONCRETE JUNCTION BOX DETAILS
STANDARD DRAWING TITLE

STD DWG
AT 7

DGN Files:L:\Standard Drawings\Imperial\2005Approved\xChange60Approved\sa07.dgn
01-MAR-2006