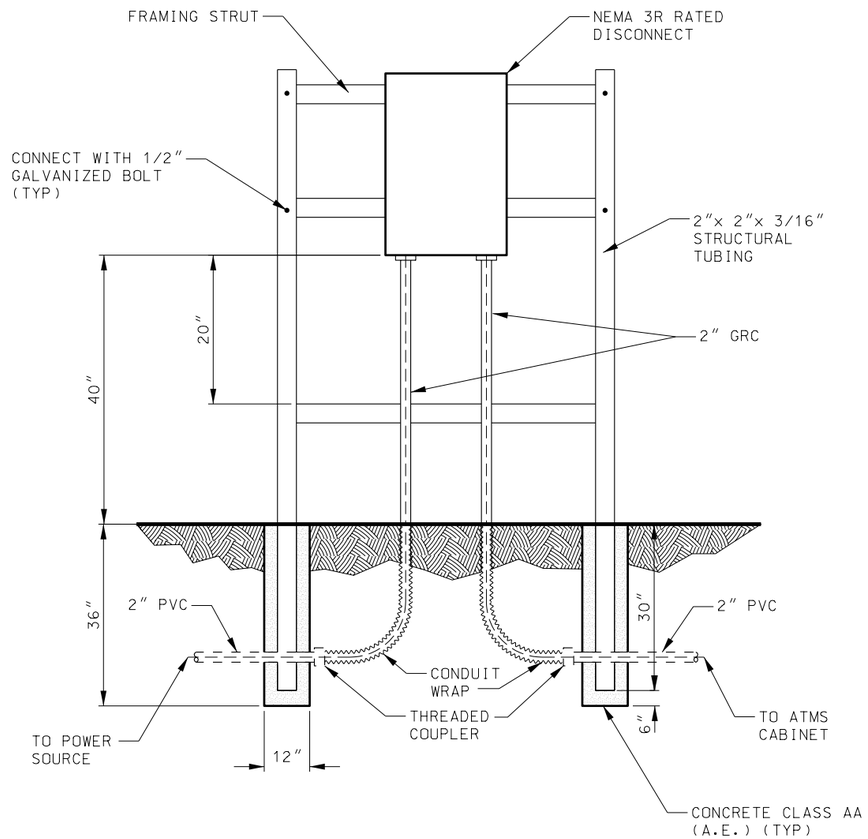

A / AT 9 SUPPLEMENTAL DISCONNECT FRAME

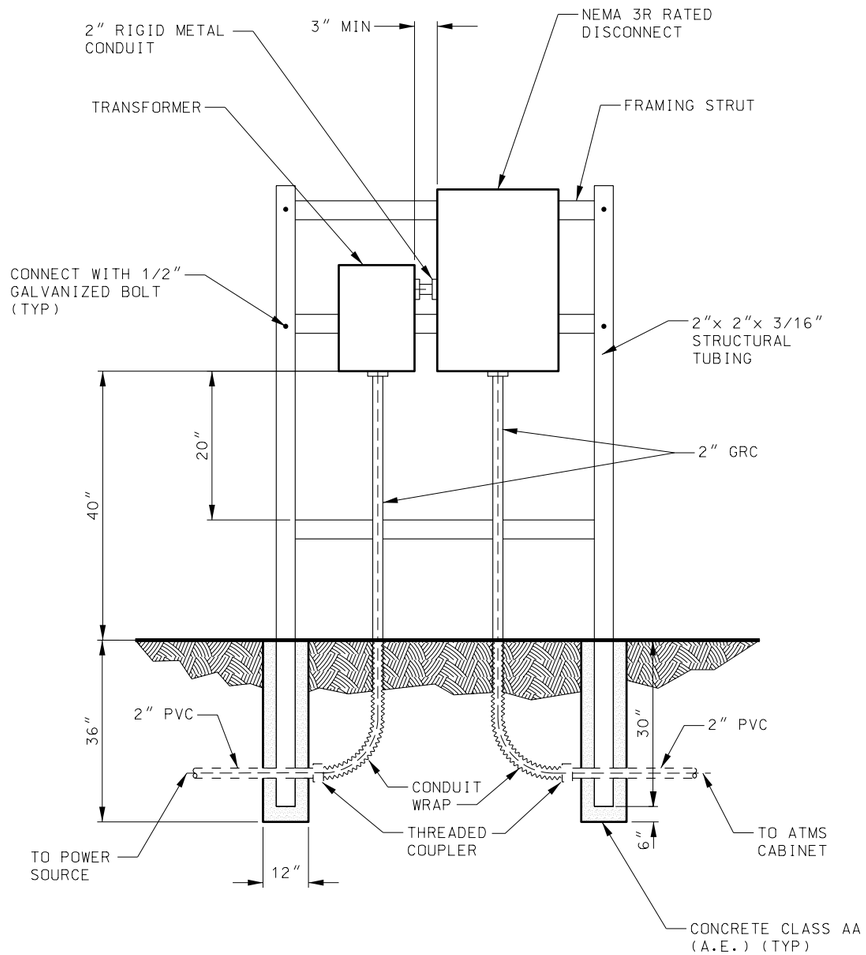

B / AT 9 SUPPLEMENTAL DISCONNECT WITH TRANSFORMER FRAME

NOTE:
1. FRAME SHOULD BE LOCATED BETWEEN 10 TO 15 FEET FROM CABINET.

REVISIONS

NO.	DATE	APPR.	REMARKS
1	2/24/05	S.S.	DRAWING REPLACED. TITLE CHANGED.

UTAH DEPARTMENT OF TRANSPORTATION
STANDARD DRAWINGS FOR ROAD AND BRIDGE CONSTRUCTION
SALT LAKE CITY, UTAH

RECOMMENDED FOR APPROVAL — FEB.24,2005 DATE
CHAIRMAN STANDARDS COMMITTEE APPROVED — FEB.24,2005 DATE
DEPUTY DIRECTOR

STANDARD DRAWING TITLE
ATMS CABINET DISCONNECT AND TRANSFORMER FRAME

STD DWG
AT 9

DGN File:N:\Esd\Standard Drawings\Imperial\2005Approved\xChanges\Approved\sa09.dgn
14-MAR-2005