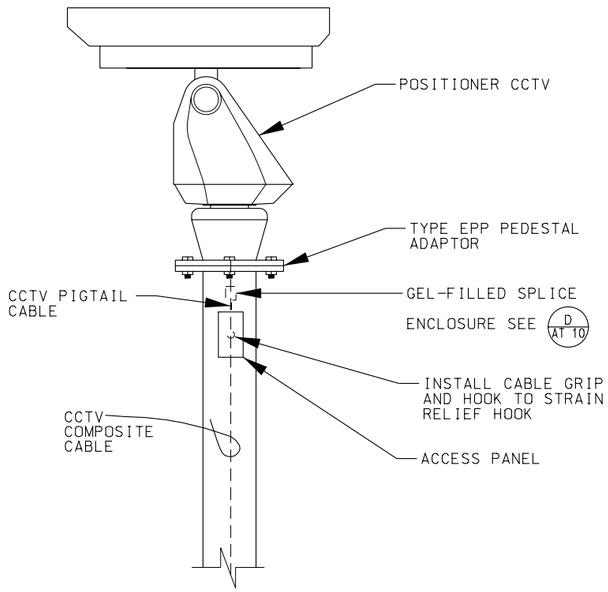

A AT 10 CCTV MOUNTING DETAIL
PEDESTAL MOUNTED POSITIONER CCTV

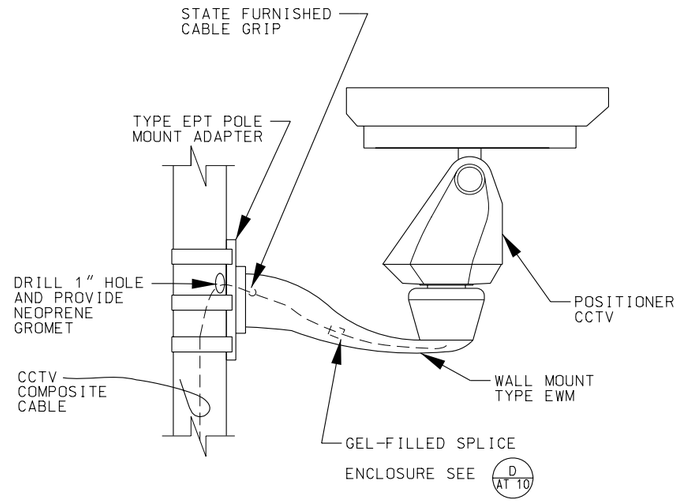

B AT 10 CCTV MOUNTING DETAIL
POLE MOUNTED POSITIONER CCTV

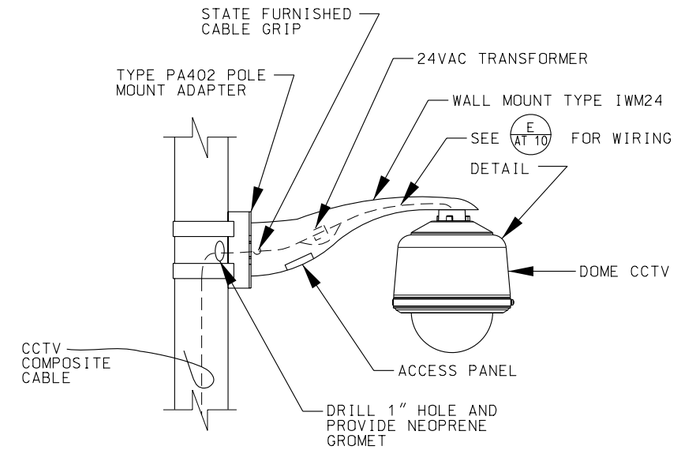

C AT 10 CCTV MOUNTING DETAIL
POLE MOUNTED DOME CCTV

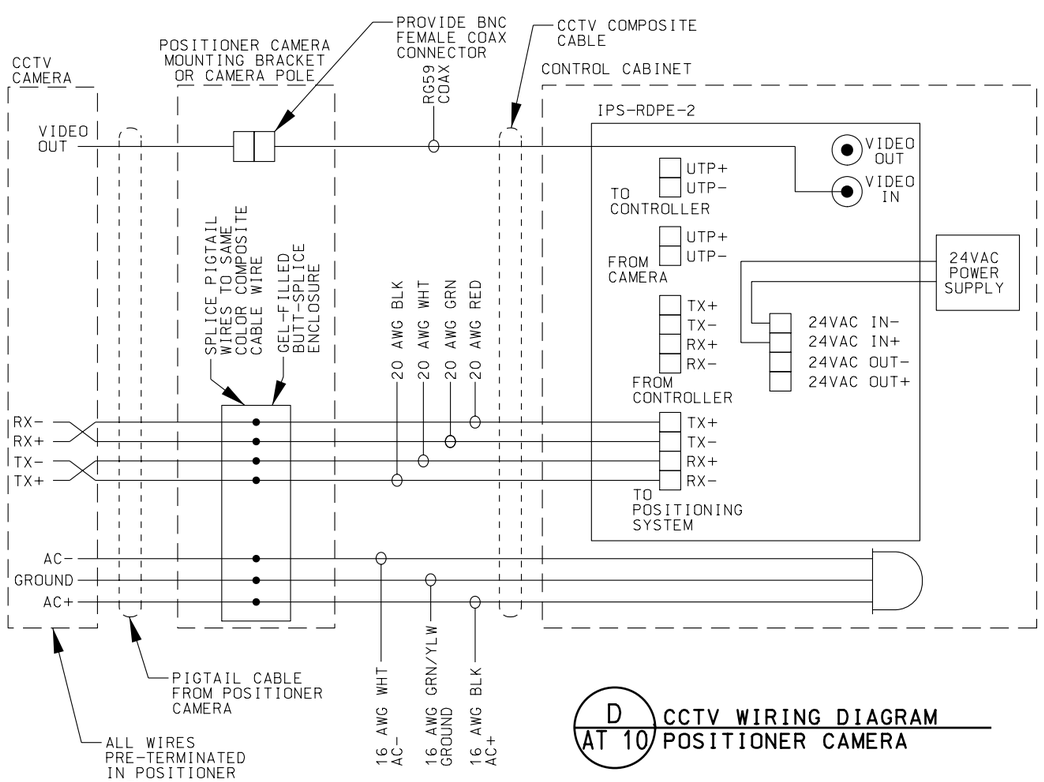

D AT 10 CCTV WIRING DIAGRAM
POSITIONER CAMERA

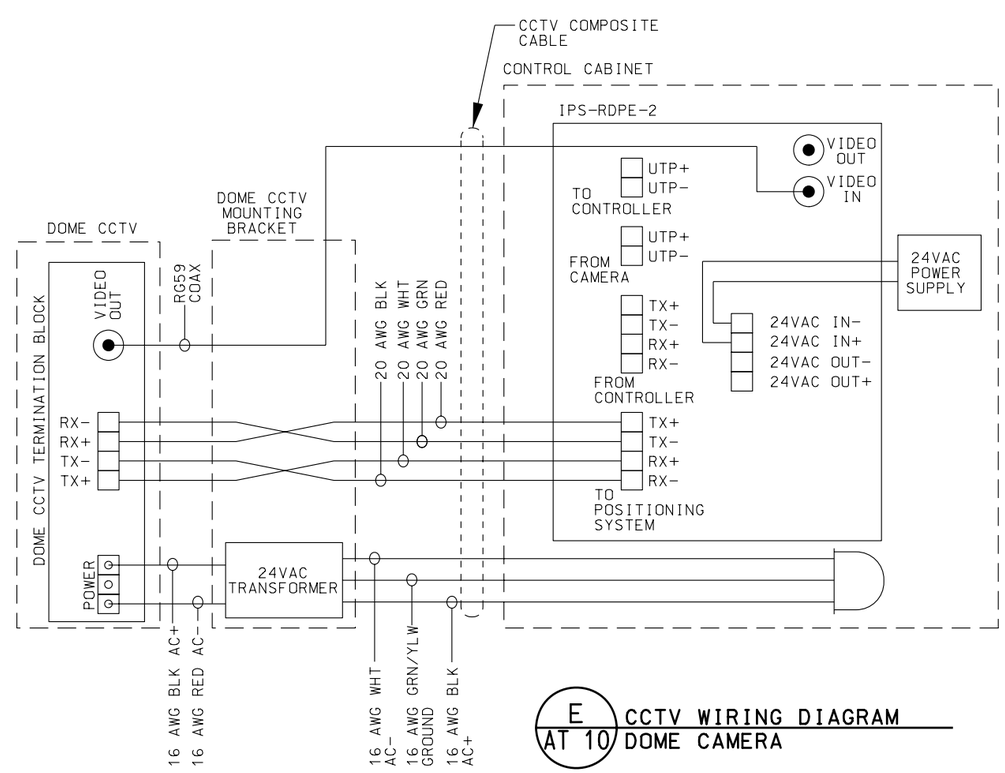

E AT 10 CCTV WIRING DIAGRAM
DOME CAMERA

REVISIONS

NO.	DATE	APPR.	REMARKS
1	2/24/05	S.S.	REVISED CAMERA MOUNTING AND ADDED WIRING. TITLE CHANGED.

UTAH DEPARTMENT OF TRANSPORTATION
STANDARD DRAWINGS FOR ROAD AND BRIDGE CONSTRUCTION
SALT LAKE CITY, UTAH

RECOMMENDED FOR APPROVAL — FEB.24,2005 DATE
CHAIRMAN STANDARDS COMMITTEE APPROVED — FEB.24,2005 DATE
DEPUTY DIRECTOR

CCTV MOUNTING DETAILS
STANDARD DRAWING TITLE

STD DWG
AT 10

DGN File:N:\Esd\Standard_Drawings\Imperials\2005Approved\xChanges\Approved\at10.dgn

14-MAR-2005