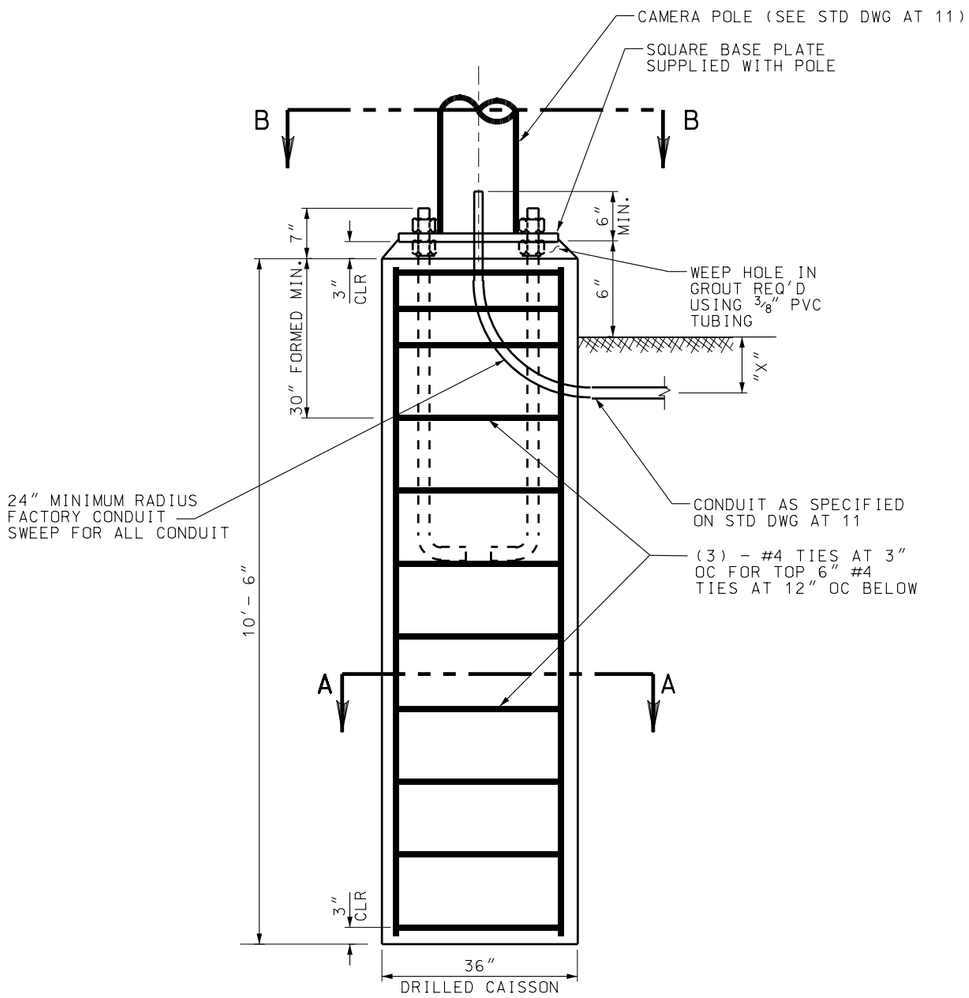

TABLE #1 - CONDUIT DEPTH "X"

18"	IF ENTERING ADJACENT JUNCTION BOX
AS REQUIRED BY TABLE 2 OF AT 6	IF NO ADJACENT JUNCTION BOX

A / AT 12 CCTV POLE FOUNDATION

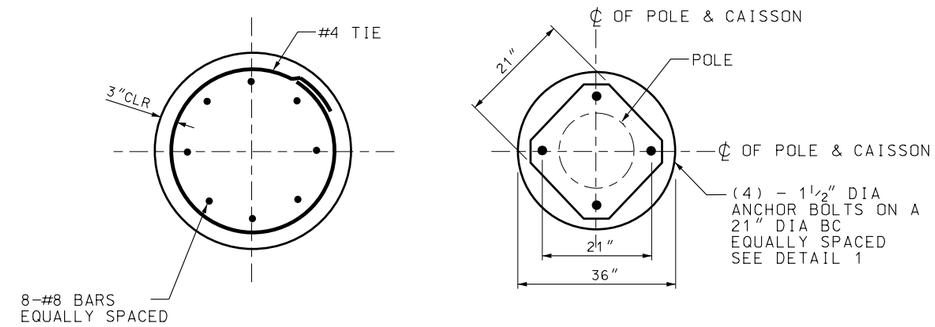

CAISSON FOUNDATION DETAILS

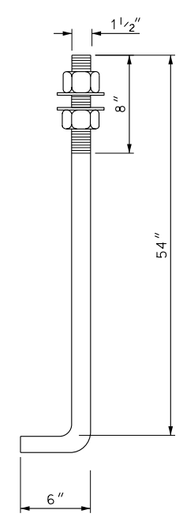

(4) - ANCHOR BOLTS WITH
(2) - HEX NUTS AND 2 WASHERS

B / AT 12 ANCHOR BOLT DETAIL

NO.	DATE	APPR.	REMARKS
1	2/24/05	S.S.	TIE SIZE CORRECTED.

REVISIONS

UTAH DEPARTMENT OF TRANSPORTATION
STANDARD DRAWINGS FOR ROAD AND BRIDGE CONSTRUCTION
SALT LAKE CITY, UTAH

RECOMMENDED FOR APPROVAL — FEB.24,2005 DATE
CHAIRMAN STANDARDS COMMITTEE APPROVED — FEB.24,2005 DATE
DEPUTY DIRECTOR

CCTV POLE FOUNDATION FOR DEDICATED CCTV POLE
STANDARD DRAWING TITLE

STD DWG
AT 12

DGN File:N:\Eng\Standard Drawings\Imperial\2005Approved\xChanges\Approved\sa12.dgn
14-MAR-2005