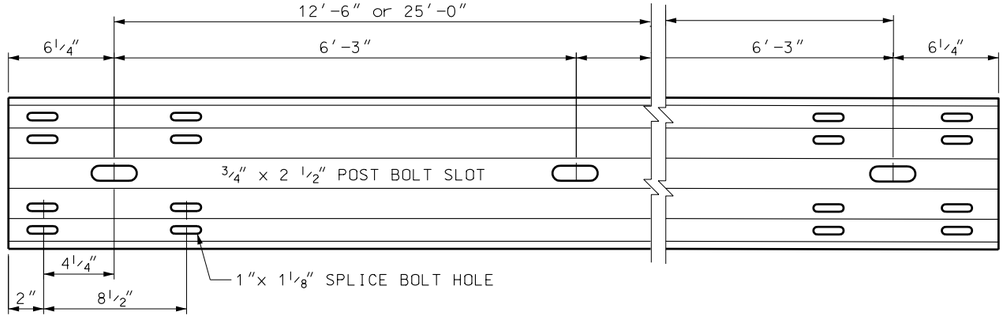

STANDARD GUARDRAIL PANELS

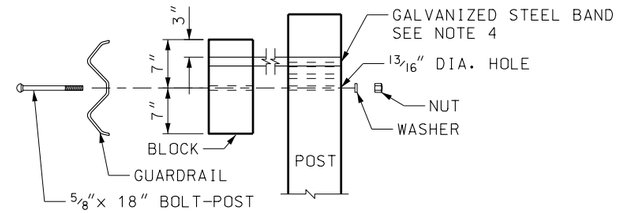

WOOD POST TO RAIL TYPICAL
USE BOTTOM HOLE FOR INITIAL INSTALLATION

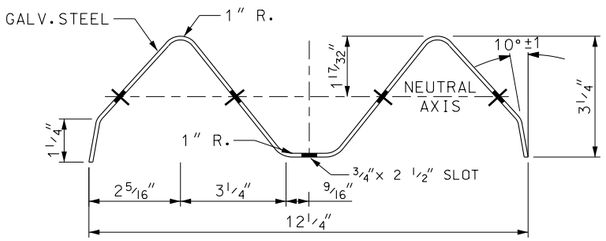

SECTION THRU RAIL ELEMENT

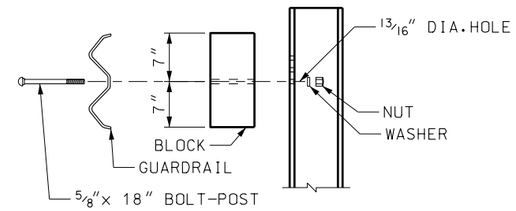

STEEL POST TO RAIL TYPICAL
USE BOTTOM HOLE FOR INITIAL INSTALLATION

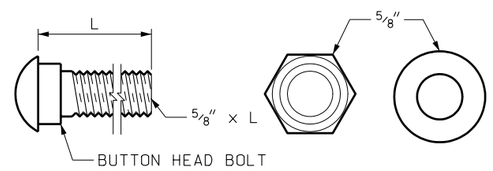

GALVANIZED
BOLTS, NUTS, WASHERS

	L
SPLICE BOLTS (WASHER NOT REQ'D.)	1 1/4"
STEEL BOLT W/ WOOD BLOCK	10"
WOOD POST W/ WOOD BLOCK	18"
WOOD POST W/ WOOD BLOCK (MEDIAN)	25"

NOTES:

1. SEE INSTALLATION DETAIL STD DWG BA 4E FOR POST LENGTH REQUIREMENTS.
2. 84" POST MARKING: WOOD POST, BRAND POST WITH 1 1/2" x 2" MARKING L84, STEEL POST STAMP POST WITH 1 1/2" x 2" MARKING L84.
3. DO NOT USE WASHERS ON RAIL FACE OR SPLICE CONNECTION.
4. BAND WOOD BLOCKS TO WOOD POSTS WITH 1/2" STEEL GALVANIZED BAND.
5. A COMPOSITE OR PLASTIC BLOCK CAN BE SUBSTITUTED FOR THE NOTCHED WOOD BLOCK ON STEEL POST INSTALLATION. NCHRP-350 COMPLIANCE REQUIRED.

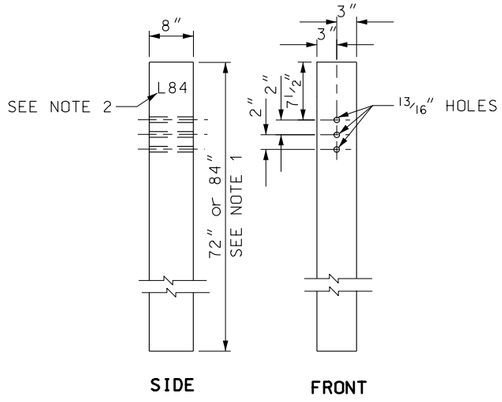

6" X 8"
WOOD POST
(SEE NOTE 1)

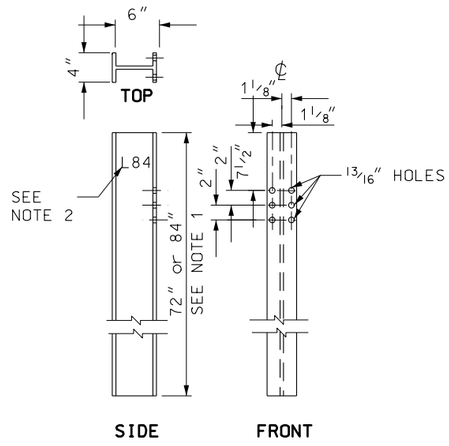

W6 X 8.5
STEEL POST

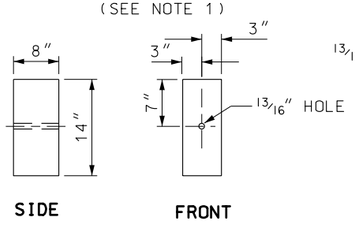

6" X 8"
WOOD BLOCK

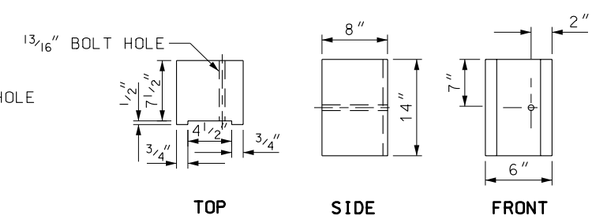

6" X 8"
NOTCHED WOOD BLOCK
(SEE NOTE 3)

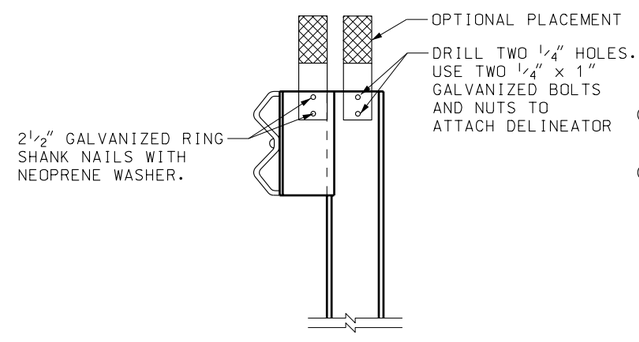

DELINEATOR DETAIL
STEEL POST W/WOOD
OR COMPOSITE BLOCK

SEE STD DWG GW 9 FOR HARDWARE
AND GW 10 FOR PLACEMENT

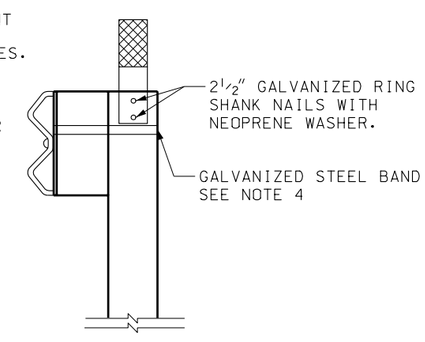

DELINEATOR DETAIL
WOOD POST W/WOOD BLOCK

SEE STD DWG GW 9 FOR HARDWARE
AND GW 10 FOR PLACEMENT

REVISIONS

NO.	DATE	APPR.	REMARKS

UTAH DEPARTMENT OF TRANSPORTATION
STANDARD DRAWINGS FOR ROAD AND BRIDGE CONSTRUCTION
SALT LAKE CITY, UTAH

RECOMMENDED FOR APPROVAL — JAN.01.2005 DATE
CHAIRMAN STANDARDS COMMITTEE APPROVED — JAN.01.2005 DATE
DEPUTY DIRECTOR

W-BEAM GUARDRAIL HARDWARE
STANDARD DRAWING TITLE

STD DWG
BA 4A

DGN File:N:\Eng\Standard Drawings\Imperial\2005Approved\Barriers (BA)\ba04a.dgn
15-DEC-2004