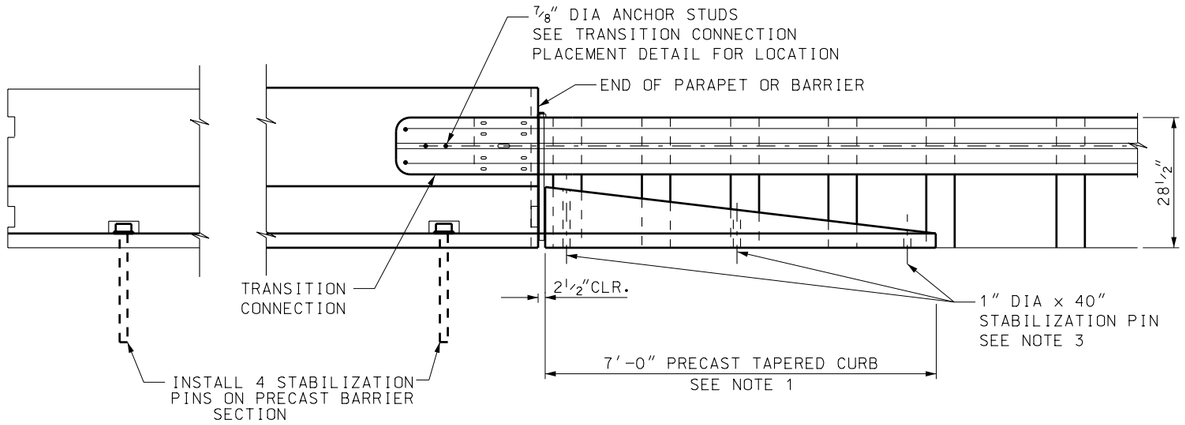

ELEVATION

RIGHT SIDE SHOWN LEFT SIDE SIMILAR

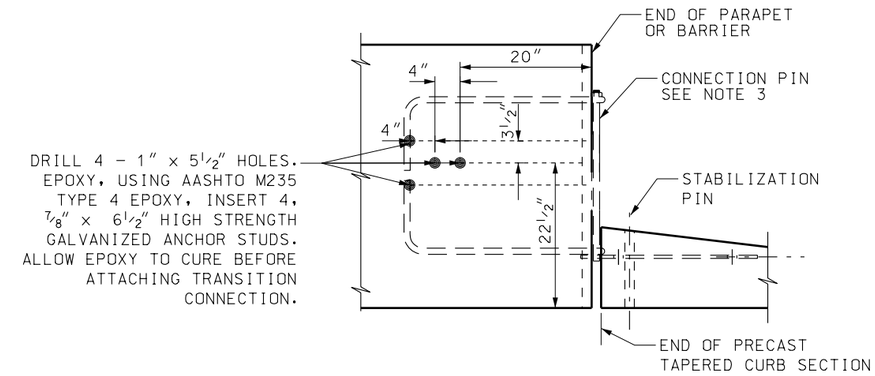

TRANSITION CONNECTION AND CURB SECTION PLACEMENT DETAIL

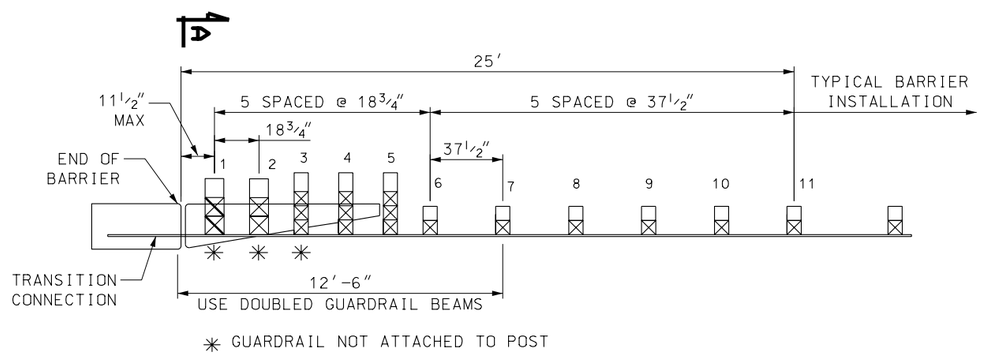

POST PLACEMENT DETAIL

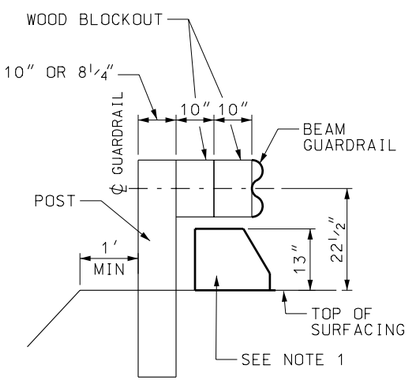

SECTION A-A

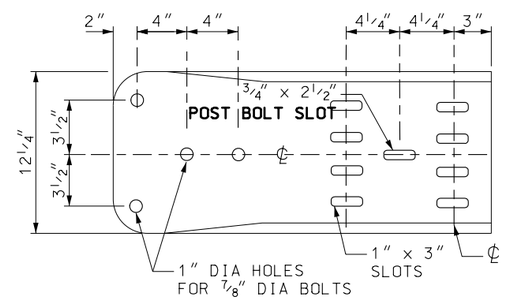

TRANSITION CONNECTION

WOOD POST OPTION
POST # 1 & # 2
POSTS 10" x 10" x 8'
BLOCKS 10" x 10" x 14"
POSTS # 3 THROUGH # 11
TYPICAL WOOD POSTS
AND BLOCKS
(SEE STD DWG BA 4A)

STEEL POST OPTION
POSTS # 1 & # 2
W8 x 21 x 8'
BLOCKS 6" x 8" x 14"
POSTS # 3 THROUGH # 11
TYPICAL STEEL POSTS
AND BLOCKS
(SEE STD DWG BA 4A)

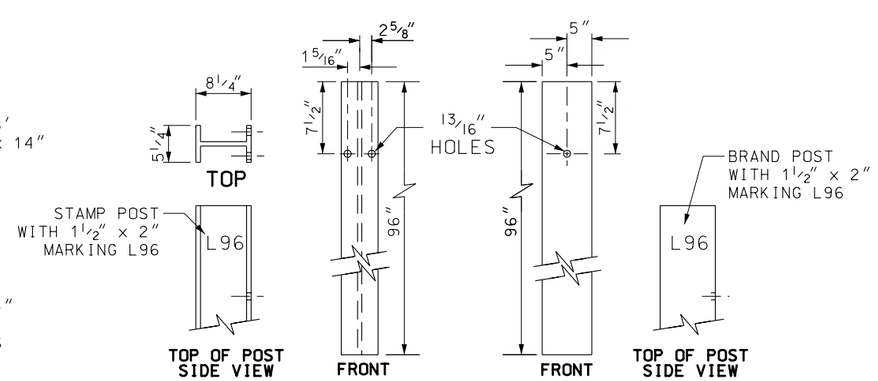

POSTS # 1 AND # 2 OPTIONS

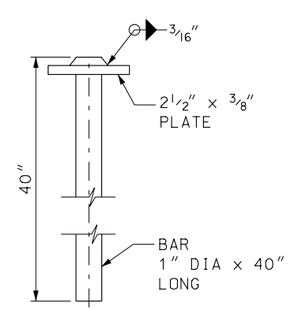

STABILIZATION PIN

SEE NOTE 5

NOTES:

1. SEE PLAN SET FOR BARRIER OR PARAPET TYPE TO DETERMINE APPROPRIATE CURB SECTION. SEE STD DWG BA 4C FOR CURB SECTION REQUIREMENTS.
2. COMPLETE SITE PREPARATION PRIOR TO INSTALLING TRANSITION.
3. INSTALL A CONNECTION PIN USING A CONNECTION PIN FROM STD DWG BA 1A.
4. PRE-DRILL 1" HOLE THROUGH PAVED SURFACE PRIOR TO INSTALLING STABILIZATION PINS.
5. USE OF A HOT FORGED HEAD, MEETING PLATE SIZE AND THICKNESS IS ACCEPTABLE IN PLACE OF A WELDED PLATE.

REVISIONS

NO.	DATE	APPR.	REMARKS
1	02/24/05	G.S.	TITLE CHANGED. DRAWING COMPLETELY REVISED.
2	08/25/05	G.S.	ADDED NOTE 5. CHANGED WELDING INFORMATION ON PIN DETAIL.

UTAH DEPARTMENT OF TRANSPORTATION
STANDARD DRAWINGS FOR ROAD AND BRIDGE CONSTRUCTION
SALT LAKE CITY, UTAH

RECOMMENDED FOR APPROVAL — AUG.25,2005 DATE
CHAIRMAN STANDARDS COMMITTEE APPROVED — AUG.25,2005 DATE
DEPUTY DIRECTOR

W-BEAM GUARDRAIL TRANSITION
STANDARD DRAWING TITLE

STD DWG
BA 4B

DGN File: L:\Standard Drawings\Imperial\2005\approved\xChange4\approved\BA04B.dgn
06-SEP-2005