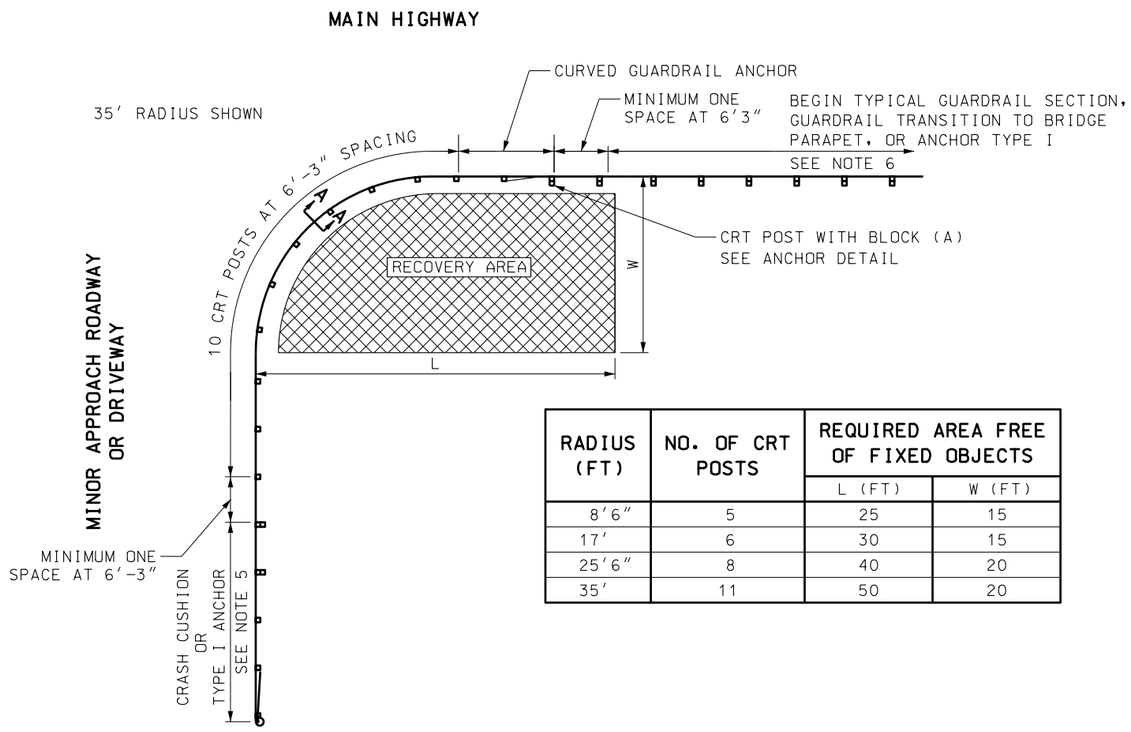

RADIUS (FT)	NO. OF CRT POSTS	REQUIRED AREA FREE OF FIXED OBJECTS	
		L (FT)	W (FT)
8′6″	5	25	15
17′	6	30	15
25′6″	8	40	20
35′	11	50	20

NOTES:

1. LIST RADIUS REQUIREMENT FOR EACH LOCATION IN THE PROJECT PLANS AND SUMMARY SHEET.
2. SHOP BEND RADIUS ELEMENTS. FIELD BENDING IS NOT PERMITTED.
3. RECOVERY AREA BEHIND THE GUARDRAIL TO BE MAINTAINED FREE OF FIXED OBJECTS.
4. MAINTAIN 10:1 SLOPE IN FRONT OF CURVED SECTION.
5. USE CRASH CUSHIONS ON INTERSECTING ROADWAYS OPEN TO THE GENERAL PUBLIC. USE ANCHOR TYPE I (REFER TO STD DWG BA 4D) ON BUSINESS/RESIDENTIAL DRIVEWAYS, OR RESTRICTED/LIMITED ENTRY ROADWAYS.
6. USE ANCHOR TYPE I WHEN OPPOSING TRAFFIC IS 1.2 TIMES FROM THE REQUIRED CLEAR ZONE.
7. USE NOMINAL DIMENSIONS FOR ALL TIMBER.

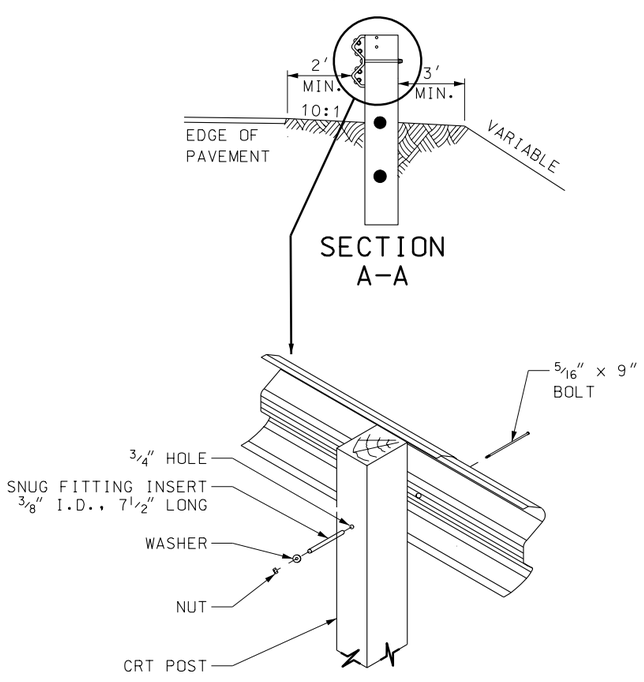

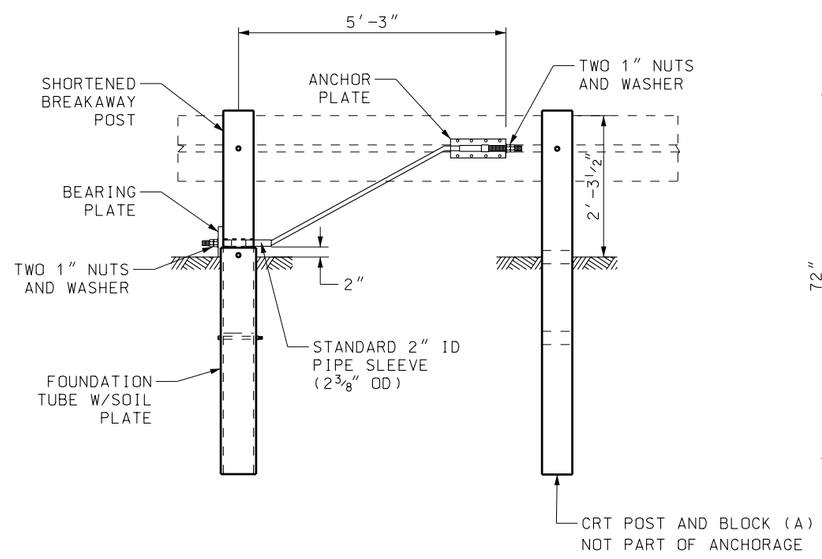

CURVED GUARDRAIL ANCHOR

(REFER TO STD DWG BA 4D)

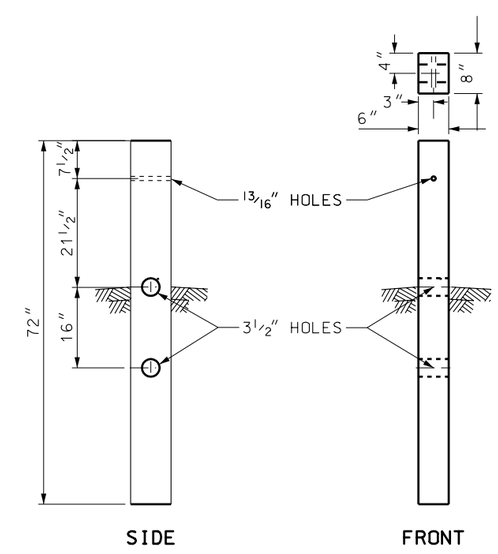

CONTROLLED RELEASE TERMINAL (CRT) POST

SEE NOTE 7

NO.	DATE	APPR.	REMARKS

REVISIONS

UTAH DEPARTMENT OF TRANSPORTATION
STANDARD DRAWINGS FOR ROAD AND BRIDGE CONSTRUCTION
SALT LAKE CITY, UTAH

RECOMMENDED FOR APPROVAL — JAN.01,2005 DATE
CHAIRMAN STANDARDS COMMITTEE APPROVED — JAN.01,2005 DATE
DEPUTY DIRECTOR

W-BEAM GUARDRAIL CURVE DETAILS

STANDARD DRAWING TITLE

STD DWG
BA 4L

DGN File:N:\Esa\Standard Drawings\Imperial\2005Approved\Barriers (BA)\ba04L.dgn
15-DEC-2004