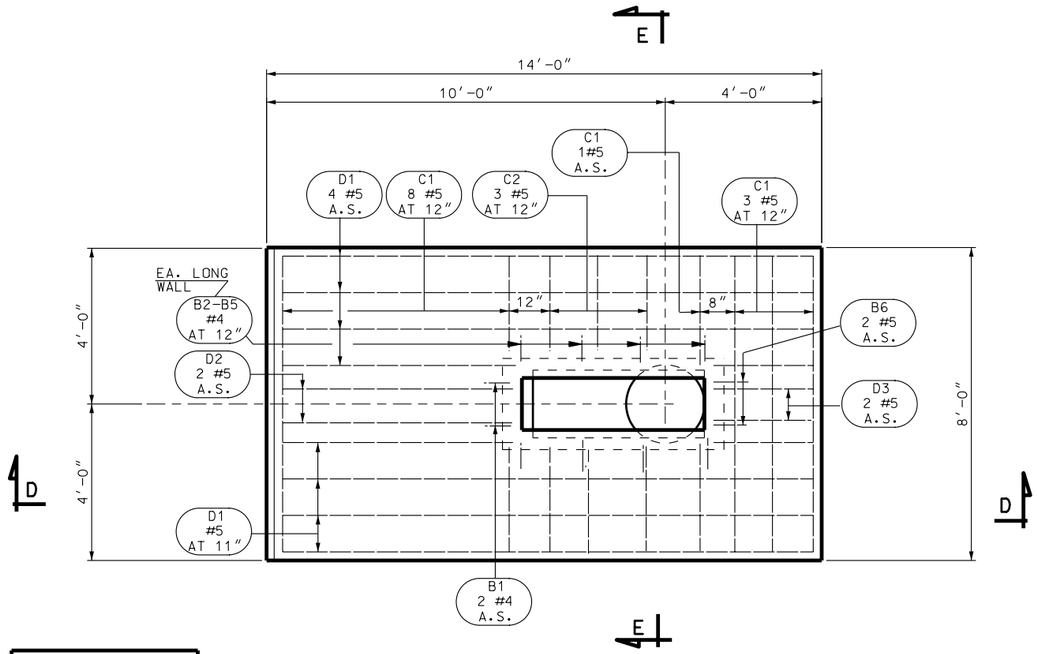

PLAN

NOTES:

1. CENTER APRON ON CHANNEL FLOWLINE.
2. PLACE 6″ OF UNTREATED BASE COURSE AND COMPACT PER UDOT STANDARD SPECIFICATIONS UNDER EACH APRON PRIOR TO FORMING.
3. FIELD BEND D1 BARS AS REQUIRED TO CONFORM TO SLOPE.
4. PROVIDE 2″ CONCRETE COVER TO REINFORCING STEEL EXCEPT WHERE NOTED OTHERWISE.
5. USE BERM APRON WITH DROP INLET TYPE "A."
6. REPAIR ANY DAMAGE OR CUTS TO EPOXY COATING.

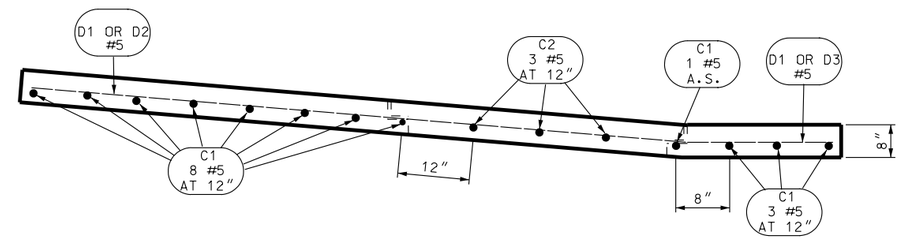

SECTION D-D

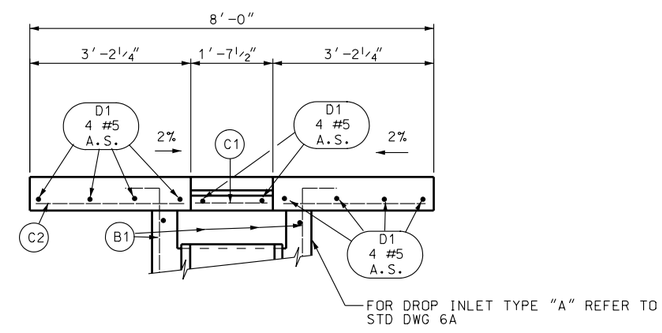

SECTION E-E

QUANTITIES
(FOR INFORMATION ONLY)

REINF. STEEL (LB.)	CONC. (CU.YD.)
300	2.7

REINFORCING STEEL SCHEDULE

A1			A2			A3		
SIZE	NO.	LENGTH	SIZE	NO.	LENGTH	SIZE	NO.	LENGTH
4	4	4′-4″	4	5	2′-8″	4	4	1′-6″

B1			B2			B3			B4			B5			B6		
SIZE	NO.	a (1′-2)	SIZE	NO.	a (1′-2)	SIZE	NO.	a (1′-2)	SIZE	NO.	a (1′-2)	SIZE	NO.	a (1′-2)	SIZE	NO.	a (1′-2)
4	4	1′-6″	4	2	1′-5″	4	2	1′-4″	4	2	1′-3″	4	2	1′-2″	4	4	1′-0″

C1			C2		
SIZE	NO.	LENGTH	SIZE	NO.	LENGTH
4	12	7′-8″	5	6	3′-5″

D1			D2			D3		
SIZE	NO.	LENGTH	SIZE	NO.	LENGTH	SIZE	NO.	LENGTH
5	8	13′-8″	5	2	5′-5″	5	2	3′-8″

NO.	DATE	APPR.	REMARKS

REVISIONS

UTAH DEPARTMENT OF TRANSPORTATION
STANDARD DRAWINGS FOR ROAD AND BRIDGE CONSTRUCTION
SALT LAKE CITY, UTAH

RECOMMENDED FOR APPROVAL — JAN.01,2005 DATE
CHAIRMAN STANDARDS COMMITTEE APPROVED — JAN.01,2005 DATE
DEPUTY DIRECTOR

BERM APRON
WITH DROP INLET
TYPE "A"

STANDARD DRAWING TITLE

STD DWG
CB 6B

DGN File:N:\Esa\Standard.Drawings\Imperial\2005Approved\Catch Basins and Cleanouts (CB)\cb06B.dgn
15-DEC-2004