## PLAN A1: SPEEDS UP TO 40 MPH

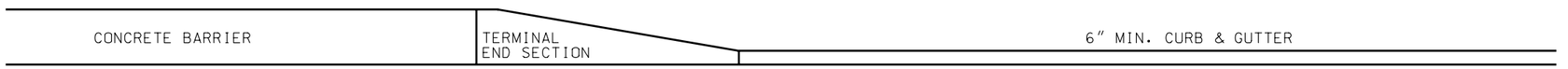


PROFILE VIEW

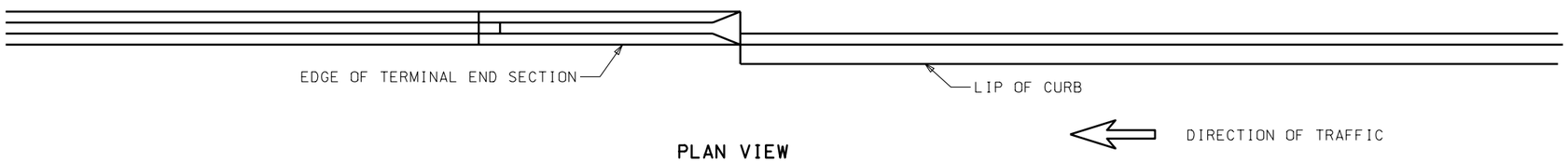


PLAN VIEW

## PLAN A2: SPEEDS OVER 40 MPH

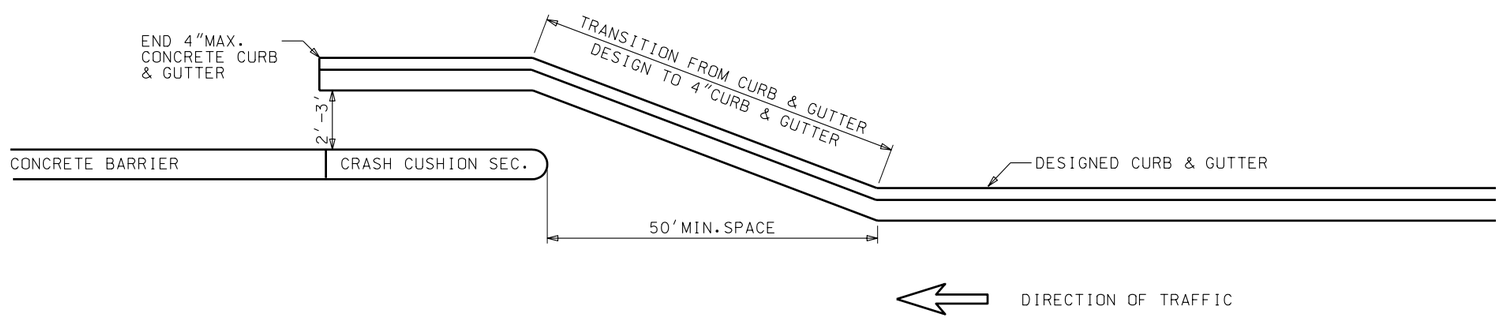


REVISIONS

| NO. | DATE | APPR. | REMARKS |
|---|---|---|---|
| | | | |

UTAH DEPARTMENT OF TRANSPORTATION
STANDARD DRAWINGS FOR ROAD AND BRIDGE CONSTRUCTION
SALT LAKE CITY, UTAH

RECOMMENDED FOR APPROVAL — JAN.01.2005 DATE
DEPUTY DIRECTOR

CHAIRMAN STANDARDS COMMITTEE APPROVED — JAN.01.2005 DATE

CRASH CUSHION
DRAINAGE DETAILS
GUIDELINE A

STANDARD DRAWING TITLE

STD DWG
CC 2

DGN File:N:\Esa\Standard_Drawings\Imperial\2005Approved\Crash Cushions (CC)\cc02.dgn
15-DEC-2004