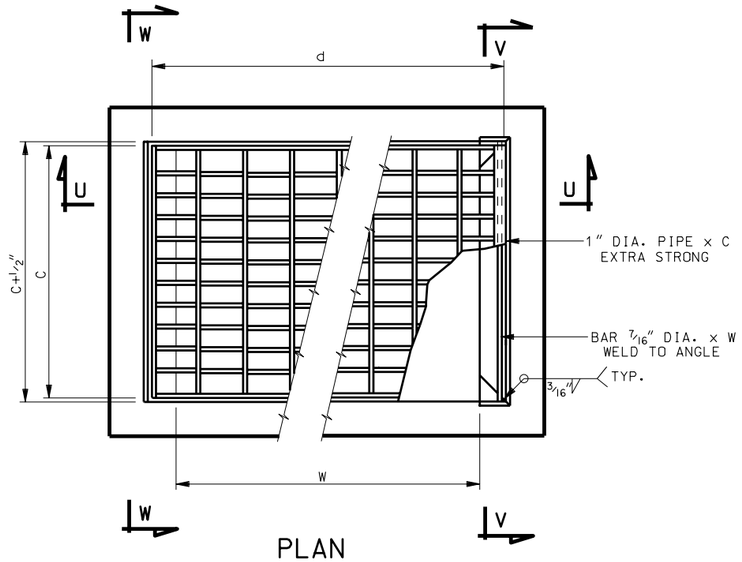

PLAN

DETAIL OF BICYCLE-SAFE GRATING

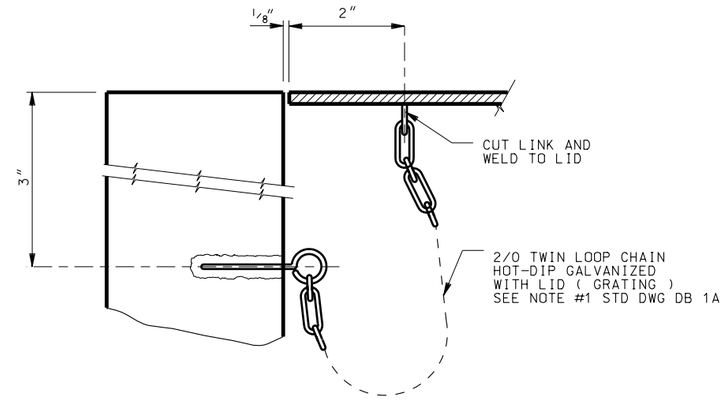

SECTION Z-Z

NOTE #1 STD DWG DB 1A
LENGTH OF CHAIN:
FOR LID: L = 1'-9
FOR GRATING: L = 2'-6

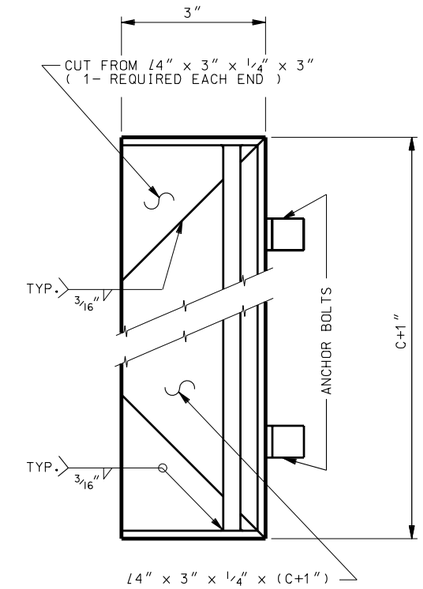

SECTION S-S

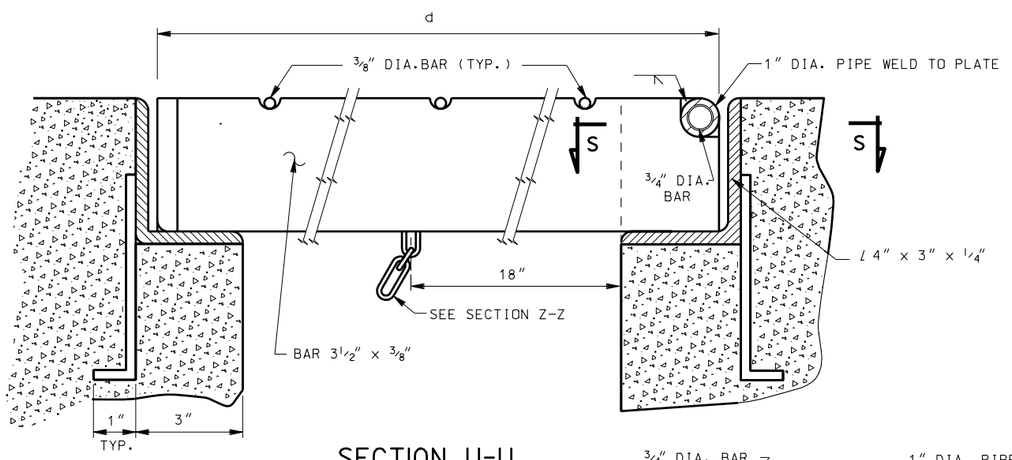

SECTION U-U

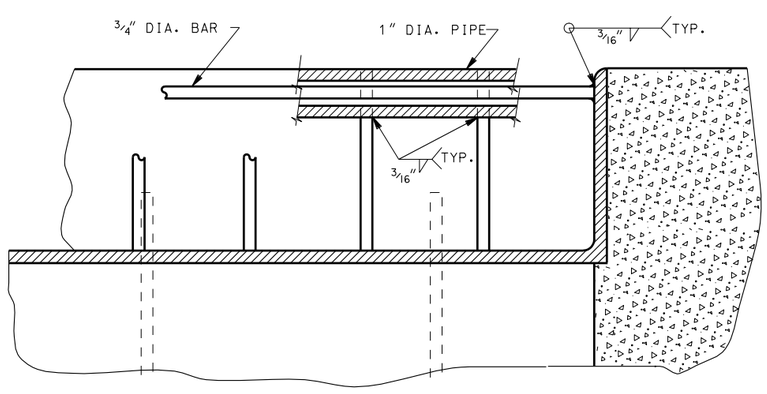

SECTION V-V

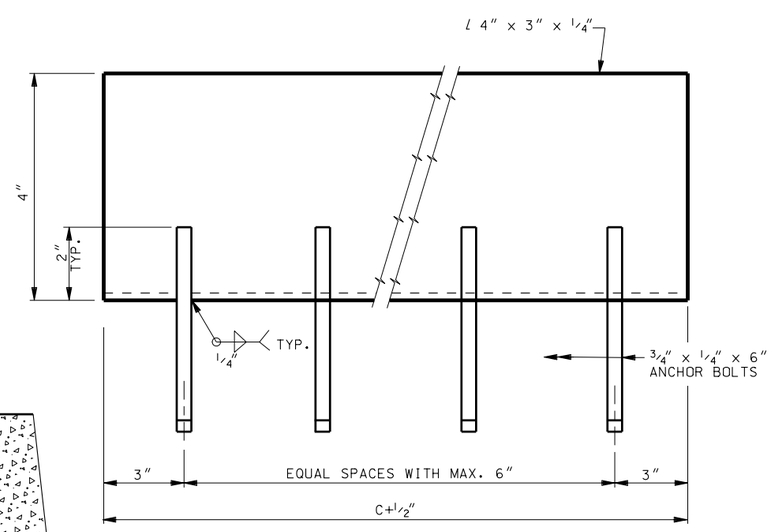

SECTION W-W

DIMENSIONS & QUANTITIES
(SEE SCHEDULES ON STD DWG DB 1D)

NO.	DATE	APPR.	REMARKS

REVISIONS

UTAH DEPARTMENT OF TRANSPORTATION
STANDARD DRAWINGS FOR ROAD AND BRIDGE CONSTRUCTION
SALT LAKE CITY, UTAH

RECOMMENDED FOR APPROVAL — JAN.01,2005 DATE
CHAIRMAN STANDARDS COMMITTEE APPROVED — JAN.01,2005 DATE
DEPUTY DIRECTOR

STANDARD DIVERSION BOX BICYCLE-SAFE GRATING DETAILS FOR 18" DIA OR 24" DIA.PIPE

STANDARD DRAWING TITLE

STD DWG
DB 1C

DGN File:N:\Eng\Standard.Drawings\Imperial\2005Approved\Diversion Boxes (DB)\db01c.dgn
15-DEC-2004