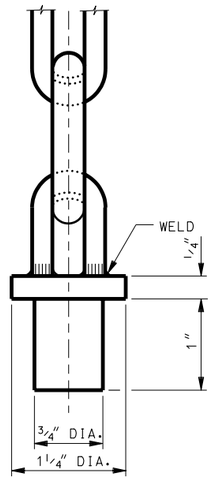

SET BOLT DETAIL

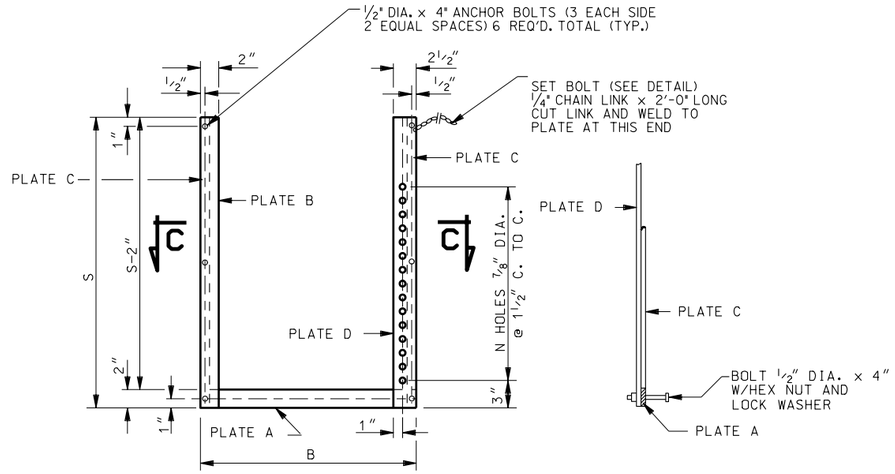

FRAME DETAILS

SCHEDULE NO. 1

LINE	DIMENSIONS H	K	W	T	X	REINFORCING STEEL A-BARS LENGTH	A-BARS NO.	B-BARS LENGTH	B-BARS NO.	QUANTITIES REINF. STEEL LB.	CONC. CU. YD.	STRUCTURAL STEEL GRATING LBS.	COVER PLATE LBS.	FRAME LBS.	GATE LBS.
1	2'-6	2'-0	2'-0	6"	0	2'-8	12	2'-1	12	59	.525	177	80	18	26
2	3'-0	2'-6	↑	↑	6"	↑	16	2'-7	↑	77	.617	↑	↑	↑	↑
3	3'-6	3'-0			1'-0		16	3'-1		83	.710				
4	4'-0	3'-6			1'-6		20	3'-7		100	.802				
5	4'-6	4'-0			2'-0		20	4'-1		107	.895				
6	5'-0	4'-6			2'-6		24	4'-7		124	.988				
7	5'-6	5'-0			3'-0		24	5'-1		130	1.080				
8	6'-0	5'-6			3'-6		28	5'-7		148	1.173				
9	6'-6	6'-0	↓	↓	4'-0	↓	28	6'-1	↓	154	1.265	↓	↓	↓	↓
10	7'-0	6'-6	2'-0	6"	4'-6	2'-8	32	6'-7	12	171	1.358	177	80	18	26
11	3'-0	2'-6	2'-6	6"	0	3'-2	16	2'-7	12	85	.770	254	114	21	41
12	3'-6	3'-0	↑	↑	6"	↑	16	3'-1	↑	91	.878	↑	↑	↑	↑
13	4'-0	3'-6			1'-0		20	3'-7		111	.989				
14	4'-6	4'-0			1'-6		20	4'-1		117	1.100				
15	5'-0	4'-6			2'-0		24	4'-7		137	1.211				
16	5'-6	5'-0			2'-6		24	5'-1		143	1.323				
17	6'-0	5'-6			3'-0		28	5'-7		162	1.434				
18	6'-6	6'-0			3'-6		28	6'-1		169	1.545				
19	7'-0	6'-6	↓	↓	4'-0	↓	32	6'-7	↓	188	1.656	↓	↓	↓	↓
20	7'-6	7'-0	2'-6	6"	4'-6	3'-2	32	7'-1	12	194	1.767	254	114	21	41

SCHEDULE NO. 2

PIPE SIZE D	COVER PLATE a	b	BICYCLE-SAFE GRATING c	d	e	m	n	FRAME AND GATE B	S	N	1-PL. A	1-PL. B	2-PL. C	1-PL. D	GATE
18"	2'-4	1'-11	1'-11	2'-4 1/2	4 1/4"	5	9	1'-11	2'-0	12	1/4"x2"x1'-11	1/4"x2"x2'-0	1/4"x1"x1'-10	1/4"x2 1/2"x2'-0	3/16"x20 1/2"x1'-10
24"	2'-10	2'-5	2'-5	2'-10 1/2	5 1/4"	6	12	2'-5	2'-6	15	1/4"x2"x2'-5	1/4"x2"x2'-6	1/4"x1"x2'-4	1/4"x2 1/2"x2'-6	3/16"x26 1/2"x2'-4

SEE NOTE 4

SEE NOTE 5

D	a
18"	1'-11 1/2
24"	2'-5 1/2

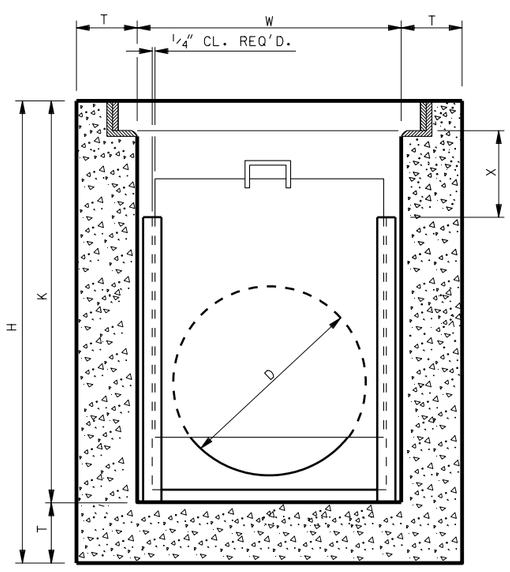

FRAME AND GATE INSTALLATION DETAIL

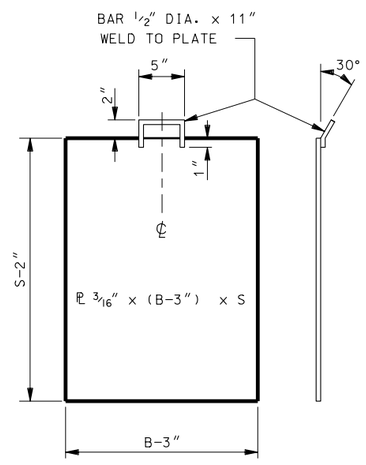

GATE

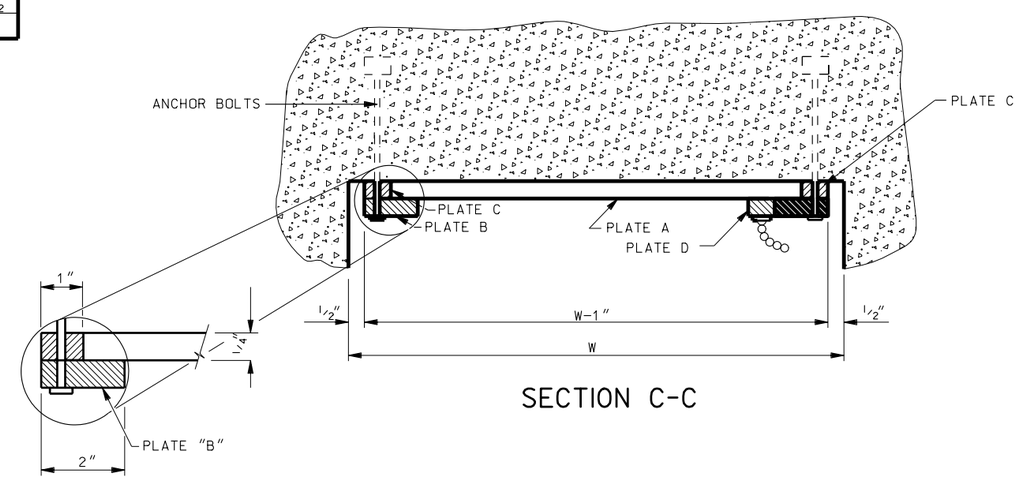

SECTION C-C

NOTES:

1. CALCULATIONS OF CONCRETE QUANTITIES ARE FOR BOXES WITH BICYCLE-SAFE GRATING AND NO OPENINGS FOR PIPE(S).
2. FOR SOLID COVER ADD .011 CU. YD. OF CONCRETE IN LINES 1 THRU 10 INCLUSIVE AND .014 CU. YD. OF CONCRETE IN LINES 11 THRU 20 INCLUSIVE AND DEDUCT .053 CU. YD. OF CONCRETE FOR EACH 18" DIA. PIPE IN LINES 1 THRU 10 INCLUSIVE AND .091 CU. YD. OF CONCRETE FOR EACH 24" DIA. PIPE IN LINES 11 THRU 20 INCLUSIVE.
3. IF DIMENSION X IS LESS THAN INSIDE PIPE DIAMETER D, THE GATE(S) CAN ONLY BE PARTIALLY OPENED TO ALLOW THE GRATING OR COVER PLATE TO BE REPLACED.
4. SEE STD DWG CB 4 FOR SOLID COVER PLATE DETAILS.
5. SEE STD DWG DB 1B FOR HINGED LID DETAILS.

NO.	DATE	APPR.	REMARKS

REVISIONS

UTAH DEPARTMENT OF TRANSPORTATION
STANDARD DRAWINGS FOR ROAD AND BRIDGE CONSTRUCTION
SALT LAKE CITY, UTAH

RECOMMENDED FOR APPROVAL — JAN.01,2005 DATE
CHAIRMAN STANDARDS COMMITTEE APPROVED — JAN.01,2005 DATE
DEPUTY DIRECTOR

STANDARD DIVERSION BOX THREE GATE BOX SECTIONS FOR 18" DIA. OR 24" DIA. PIPE

STANDARD DRAWING TITLE

STD DWG
DB 1D

DGN File:N:\Eng\Standard_Drawings\Imperial\2005Approved\Diversion Boxes (DB)\db01d.dgn

15-DEC-2004