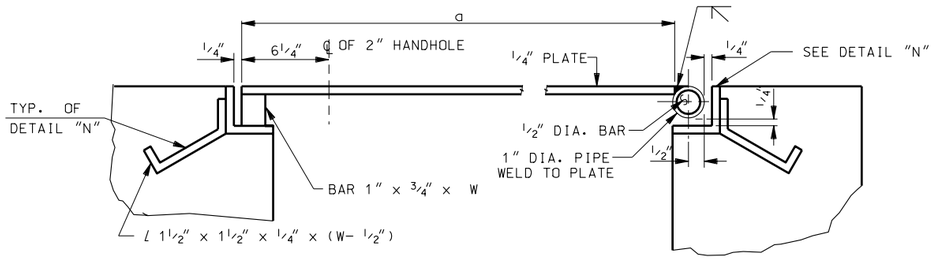


## SECTION B-B

(SECTION IS TAKEN FROM STD DWG DB 1E)

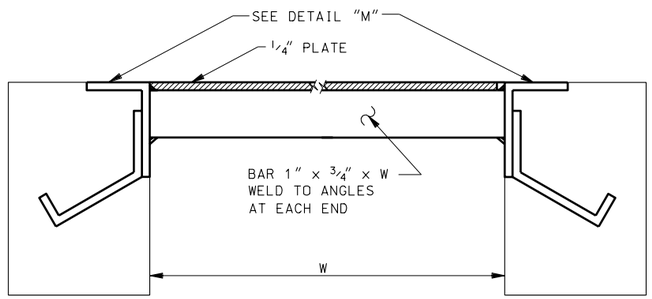


## SECTION X-X

(SECTION IS TAKEN FROM STD DWG DB 1E)

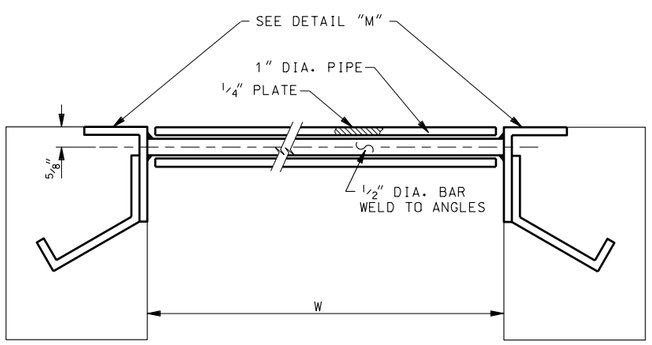


## SECTION Y-Y

(SECTION IS TAKEN FROM STD DWG DB 1E)

## SCHEDULE NO.1

| LINE | DIMENSIONS H | K | W | T | X | REINFORCING STEEL A-BARS LENGTH | A-BARS NO. | B-BARS LENGTH | B-BARS NO. | QUANTITIES REINF. STEEL LB. | CONC. CU. YD. | STRUCTURAL STEEL PIPES, BARS & ANGLES lbs. | COVER PLATE lbs. | FRAME* lbs. | GATE lbs. EA. |
|---|---|---|---|---|---|---|---|---|---|---|---|---|---|---|---|
| 1 | 2'-6 | 2'-0 | 2'-6 | 6" | 0 | 3'-2 | 12 | 2'-1 | 12 | 66 | 0.672 | 31 | 85 | 14 | 25 |
| 2 | 3'-0 | 2'-6 | ↑ | ↑ | 6" | ↑ | 16 | 2'-7 | ↑ | 85 | 0.783 | ↑ | ↑ | ↑ | ↑ |
| 3 | 3'-6 | 3'-0 | | | 1'-0 | | 16 | 3'-1 | | 91 | 0.894 | | | | |
| 4 | 4'-0 | 3'-6 | | | 1'-6 | | 20 | 3'-7 | | 111 | 1.005 | | | | |
| 5 | 4'-6 | 4'-0 | | | 2'-0 | | 20 | 4'-1 | | 117 | 1.116 | | | | |
| 6 | 5'-0 | 4'-6 | | | 2'-6 | | 24 | 4'-7 | | 137 | 1.227 | | | | |
| 7 | 5'-6 | 5'-0 | | | 3'-0 | | 24 | 5'-1 | | 143 | 1.338 | | | | |
| 8 | 6'-0 | 5'-6 | | | 3'-6 | | 28 | 5'-7 | | 163 | 1.450 | | | | |
| 9 | 6'-6 | 6'-0 | ↓ | ↓ | 4'-0 | ↓ | 28 | 6'-1 | ↓ | 169 | 1.561 | ↓ | ↓ | ↓ | ↓ |
| 10 | 7'-0 | 6'-6 | 2'-6 | 6" | 4'-6 | 3'-2 | 32 | 6'-7 | 12 | 188 | 1.672 | 31 | 85 | 14 | 25 |
| 11 | 3'-0 | 2'-6 | 3'-0 | 6" | 0 | 3'-8 | 16 | 2'-7 | 12 | 94 | 0.944 | 35 | 118 | 18 | 41 |
| 12 | 3'-6 | 3'-0 | ↑ | ↑ | 6" | ↑ | 16 | 3'-1 | ↑ | 100 | 1.074 | ↑ | ↑ | ↑ | ↑ |
| 13 | 4'-0 | 3'-6 | | | 1'-0 | | 20 | 3'-7 | | 121 | 1.203 | | | | |
| 14 | 4'-6 | 4'-0 | | | 1'-6 | | 20 | 4'-1 | | 128 | 1.333 | | | | |
| 15 | 5'-0 | 4'-6 | | | 2'-0 | | 24 | 4'-7 | | 150 | 1.463 | | | | |
| 16 | 5'-6 | 5'-0 | | | 2'-6 | | 24 | 5'-1 | | 156 | 1.592 | | | | |
| 17 | 6'-0 | 5'-6 | | | 3'-0 | | 28 | 5'-7 | | 184 | 1.722 | | | | |
| 18 | 6'-6 | 6'-0 | | | 3'-6 | | 28 | 6'-1 | | 183 | 1.852 | | | | |
| 19 | 7'-0 | 6'-6 | ↓ | ↓ | 4'-0 | ↓ | 32 | 6'-7 | ↓ | 205 | 1.981 | ↓ | ↓ | ↓ | ↓ |
| 20 | 7'-6 | 7'-0 | 3'-0 | 6" | 4'-6 | 3'-8 | 32 | 7'-1 | 12 | 211 | 2.111 | 35 | 118 | 18 | 41 |

* PLATES A TO D PER GATE

## SCHEDULE NO.2

| PIPE SIZE D | DIMENSIONS AND QUANTITIES: COVER PLATE a | b | FRAME AND GATE B | S | N | PLATE-A 1 EACH | PLATE-B 1 EACH | PLATE-C 2 EACH | GATE SIZE | PLATE-D 1 EACH |
|---|---|---|---|---|---|---|---|---|---|---|
| 18" | 2'-7 | 2'-5½ | 1'-11 | 2'-0 | 12 | ¼"x2"x1'-11 | ¼"x2"x2'-0 | ¼"x1"x1'-10 | 3/16"x20½"x1'-10 | ¼"x2½"x2'-0 |
| 24" | 3'-1 | 2'-11½ | 2'-5 | 2'-6 | 15 | ¼"x2"x2'-5 | ¼"x2"x2'-6 | ¼"x1"x2'-4 | 3/16"x26½"x2'-4 | ¼"x2½"x2'-6 |

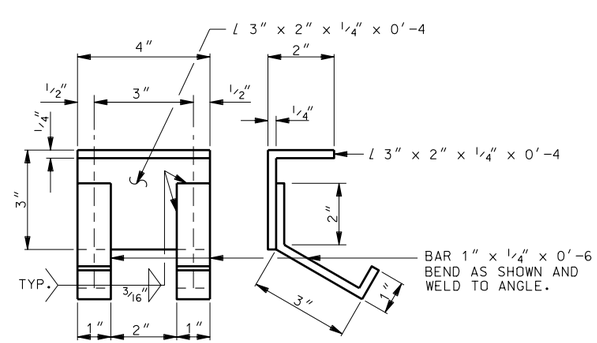


## DETAIL "M"

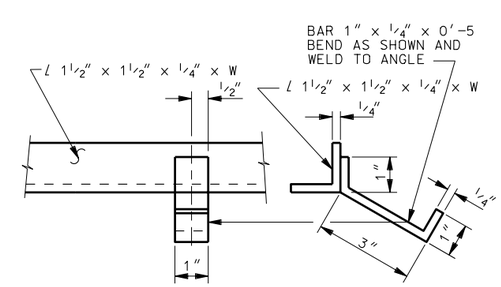


## DETAIL "N"

REVISIONS

| NO. | DATE | APPR. | REMARKS |
|---|---|---|---|
| | | | |

UTAH DEPARTMENT OF TRANSPORTATION
STANDARD DRAWINGS FOR ROAD AND BRIDGE CONSTRUCTION
SALT LAKE CITY, UTAH

RECOMMENDED FOR APPROVAL — JAN.01.2005 DATE
CHAIRMAN STANDARDS COMMITTEE APPROVED — JAN.01.2005 DATE
DEPUTY DIRECTOR

STANDARD DIVERSION BOX THREE GATE BOX SECTIONS FOR 18"DIA. OR 24" DIA.PIPE

STANDARD DRAWING TITLE

STD DWG
DB 1F

DGN File: N:\Eng\Standard Drawings\Imperial\2005Approved\Diversion Boxes (DB)\db01f.dgn
15-DEC-2004