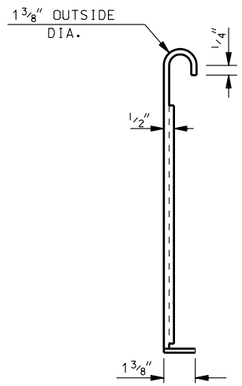

SECTION THRU PIPE OR PIPE ARCH BLADE

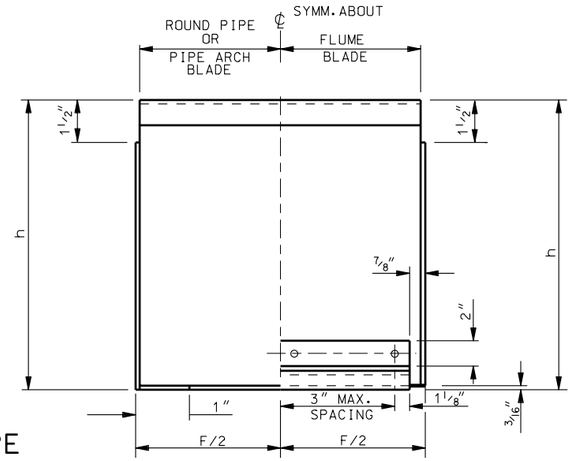

HAND SLIDE GATE BLADE DETAILS

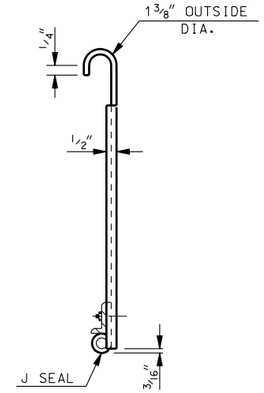

SECTION THRU FLUME BLADE

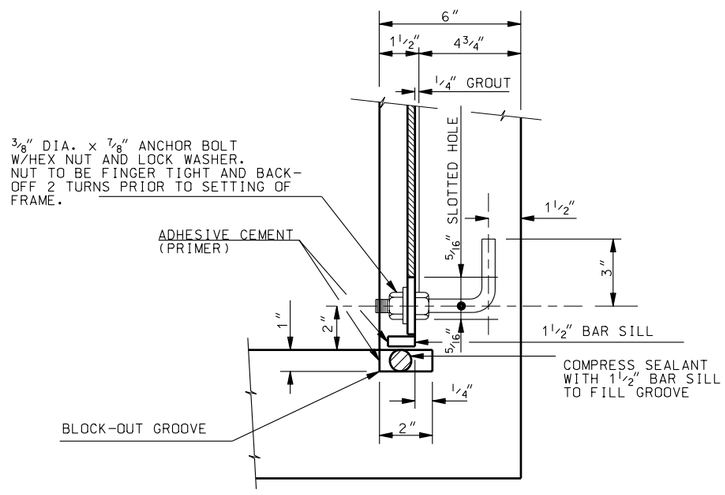

INSTALLATION SKETCH A

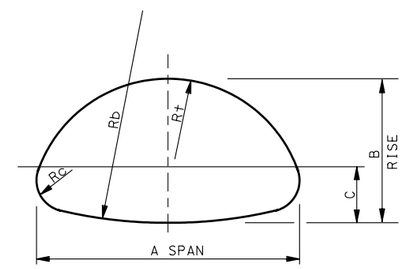

PIPE-ARCH DIMENSIONS					
SPAN	RISE	LAYOUT DIMENSIONS			
		C	Rc	R+	Rb
36"	22"	6 1/4"	5"	18 1/4"	73 1/4"

NOTE: PIPE-ARCH LAYOUT IN SHEET METAL FRAME TO CONFORM TO THESE DIMENSIONS.

NOTES:

1. USE STRUCTURAL CARBON FOR ALL BAR AND ANGLE STEEL CONFORMING TO AASHTO DESIGNATION M 270, GRADE 36. HOT-DIP GALVANIZE AFTER FABRICATION IN ACCORDANCE WITH AASHTO DESIGNATION M 111.

2. FABRICATE GUIDES, BLADES, AND SHEET METAL FRAMES OF HAND SLIDE GATES OF ZINC COATED STEEL CONFORMING TO THE REQUIREMENTS OF SPECIFICATION ASTM A 653.

3. "J" SEALS: MOLDED OR EXTRUDED NEOPRENE OR EPDM (ETHYLENE PROPYLENE) OF PROPER LENGTH, CURED TO ENSURE A DENSE HOMOGENEOUS CROSS SECTION FREE FROM PITTING, BLISTERS OR POROSITY, MEETING THE FOLLOWING SPECIFICATIONS WHEN TESTED IN ACCORDANCE WITH APPLICABLE PROVISIONS OF ASTM D 412, D 471, D 2240 AND D 395.

   SHORE A DUROMETER HARDNESS---------- 60 ± 5

	NEOPRENE	EPDM
MINIMUM ELONGATION----------	450%	35%
ULTIMATE TENSILE STRENGTH---------	2,500 psi	2,000 psi
COMPRESSION SET (MAX.)----------	30%	25%

   BOTH MATERIALS

   ABSORPTION (2 DAYS)----------5% BY WEIGHT
   TENSILE STRENGTH (48 HOURS IN OXYGEN 8 PERCENT OF BEGINNING STRENGTH @ 70°C AND 300 psi PRESSURE.)
   ACCURATELY LOCATE AND DRILL ALL HOLES IN SEAL WITH 1/8" OVERSIZE HOLLOW-CORE DRILL.

4. COMPRESSION SEALANT: 1 1/2 INCH DIA., TOP GRADE BUTYL RUBBER OF DENSE, HIGHLY COMPRESSIBLE, STABLE MATERIAL WITH GOOD SAG AND ADHESION PROPERTIES PRODUCED FROM BLENDS OF REFINED HYDROCARBON RESINS AND PLASTICIZING COMPOUNDS, REINFORCED WITH INERT MINERAL FILLERS CONTAINING NO SOLVENTS, IRRITATING FUMES OR OBNOXIOUS ODORS NOT DEPENDENT ON OXIDIZING, EVAPORATING OR CHEMICAL ACTION FOR ADHESIVE OR COHESIVE STRENGTH HAVING THE FOLLOWING PROPERTIES:

CHEMICAL COMPOSITION COMPONENTS	MIN.	MAX.	ASTM SPEC.
BITUMEN (HYDROCARBON PLASTIC CONTAIN) % BY WT.----	50	70	D4,D140
INERT MINERAL FILLER % BY WT.----------	30	50	D545
VOLATILE MATTER % BY WT.----------		2.0	D6

PHYSICAL PROPERTIES	REQUIRED	
SPECIFIC GRAVITY @ 77°F (25°C)----------	1.20 TO 1.35	D7
DUCTILITY @ 77°F 25°C MIN. ----------	5.0 c. m.	D113
SOFTENING POINT @ 77°F MIN.----------	320°F	D36
FLASH POINT c.o.c. MIN.----------	600°F	D92
FIRE POINT c.o.c. MIN.----------	625°F	D92
PENETRATION 77°F (25°C) 150 gs. 5 sec----------	50 to 120	D217

   TESTS:

   REJECT IF ONE OR MORE TEST SPECIMENS OF THE LOT REPRESENTING THE SPECIMENT, FAIL TO MEET ASTM REQUIREMENTS

5. BOTH FRAMES CAN BE USED WITH TYPE "G" HAND SLIDE GATES. SPECIFY WHETHER TYPE Ga OR Gb FRAME IS REQUIRED. SEE STD DWG DB 2C FOR FRAME TYPES. NORMALLY THE NUMBER OF GATES EQUAL THE NUMBER OF OPENINGS LESS ONE.

6. THE RUBBER SEAL FOR FLUSH BOTTOM CLOSURE: CONFORM TO ASTM D 2000.

7. MAKE FLUSH WITH FLOOR OF BOX TOP OF BAR SILL AFTER FRAME HAS BEEN PROPERLY PLUMBED AND LEVELED. GROUT FRAME IN PLACE WITH A CEMENT GROUT.

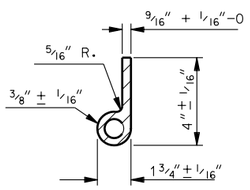

"J" SEAL

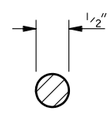

COMPRESSION SEALANT

FLEXIBLE JOINT SEALANT TYP. CROSS-SECTION

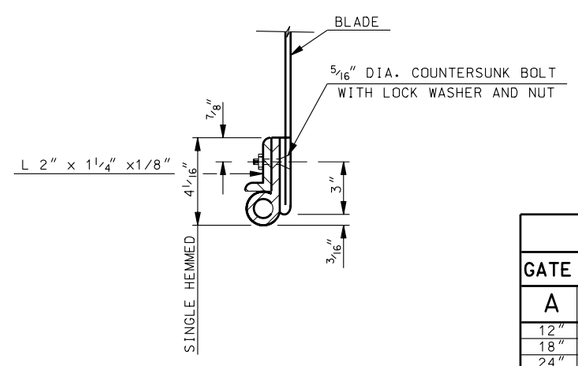

PART SECT. THRU FLUME BLADE

DIMENSION SCHEDULE															
GATE SIZE		FLUME							PIPE OR PIPE ARCH						
A	B	FRAME		GUIDE			BLADE		SHEET METAL FRAME				BLADE		
		D	h	C	GAGE	E	F	GAGE	A	h	D	GAGE	F	GAGE	
12"	12"	1'-4 1/4	1'-9	1'-6 1/2	16	2	1'-1 1/2	16	12"	1'-9	1'-4 1/4	16	1'-1 1/2	16	
18"	18"	1'-10 1/4	2'-3	2'-0 1/2	14	3	1'-7 1/2	14	18"	2'-3	1'-10 1/4	14	1'-7 1/2	14	
24"	24"	2'-4 1/4	2'-9	2'-6 1/4	10	4	2'-1 1/2	10	24"	2'-9	2'-4 1/4	10	2'-1 1/2	10	
36"	24"	3'-5 1/4	2'-7	2'-4 1/2	10	4	3'-1 1/2	8	36"	2'-7	3'-5 1/4	10	3'-1 1/2	8	

REVISIONS

NO.	DATE	APPR.	REMARKS

UTAH DEPARTMENT OF TRANSPORTATION
STANDARD DRAWINGS FOR ROAD AND BRIDGE CONSTRUCTION
SALT LAKE CITY, UTAH

RECOMMENDED FOR APPROVAL — JAN.01,2005 DATE
CHAIRMAN STANDARDS COMMITTEE APPROVED — JAN.01,2005 DATE
DEPUTY DIRECTOR

STANDARD DIVERSION BOX TYPE "G" HAND SLIDE GATE DETAILS

STANDARD DRAWING TITLE

STD DWG
DB 2D

DGN Files:N:\Esa\Standard_Drawings\Imperial\2005Approved\Diversion Boxes (DB)\db02d.dgn
15-DEC-2004