SCHEDULE OF INSTALLATION

LINE	DIMENSIONS H	W	T	A	MAX. PIPE DIA. RCP	CMP	REINFORCING STEEL S1 a	b	LGTH	QT	S2 LGTH	QT	W1 LGTH	QT	W2 N	LGTH	QT	P1 LGTH	QT	MAN STEP QT	QUANTITIES CONC. CU.YDS.	REINF. STEEL LBS.	FRAME COVER LBS.	LINE
65	8'-0	9'-0	10"	8"	48"	60"	2-0	8'-8	12'-8	20	2'-0	36	7'-0	72	6	8'-8	108	3'-6	8	5	11.234	1870.4	245	65
66	8'-4	↑	↑	10"	54"	66"	↑	↑	↑	↑		↑	7'-4	↑	6	↑	108	↑	↑	5	11.570	1895.5	↑	66
67	8'-8			6"	60"	72"							7'-8		7		116			6	11.906	1992.8		67
68	9'-0			8"	60"	72"							8'-0		7		116			6	12.242	2017.9		68
69	9'-4			10"	66"	78"							8'-4		7		116			6	12.578	2042.9		69
70	9'-8			6"	66"	84"							8'-8		8		124			7	12.914	2140.2		70
71	10'-0			8"	72"	↑							9'-0		8		124			7	13.250	2165.3		71
72	10'-4			10"	↑								9'-4		8		124			7	13.586	2190.3		72
73	10'-8			6"									9'-8		9		132			8	13.922	2287.6		73
74	11'-0			8"									10'-0		9		132			8	14.258	2312.7		74
75	11'-4			10"									10'-4		9		132			8	14.594	2337.7		75
76	11'-8			6"									10'-8		10		140			9	14.931	2435.1		76
77	12'-0			8"									11'-0		10		140			9	15.266	2460.1		77
78	12'-4			10"									11'-4		10		140			9	15.602	2485.1		78
79	12'-8			6"									11'-8		11		148			10	15.938	2582.5		79
80	13'-0			8"									12'-0		11		148			10	16.274	2607.5		80
81	13'-4			10"									12'-4		11		148			10	16.610	2632.5		81
82	13'-8			6"									12'-8		12		156			11	16.946	2729.9		82
83	14'-0			8"									13'-0		12		156			11	17.282	2754.9		83
84	14'-4			10"									13'-4		12		156			11	17.618	2779.9		84
85	14'-8			6"									13'-8		13		164			12	17.954	2877.3		85
86	15'-0			8"									14'-0		13		164			12	18.290	2902.3		86
87	15'-4			10"									14'-4		13		164			12	18.626	2927.3		87
88	15'-8			6"									14'-8		14		172			13	18.962	3024.7		88
89	16'-0			8"									15'-0		14		172			13	19.298	3049.7		89
90	16'-4			10"									15'-4		14		172			13	19.634	3074.7		90
91	16'-8			6"									15'-8		15		180			14	19.970	3172.1		91
92	17'-0			8"									16'-0		15		180			14	20.306	3197.1		92
93	17'-4			10"									16'-4		15		180			14	20.642	3222.1		93
94	17'-8			6"									16'-8		16		188			15	20.978	3319.5		94
95	18'-0			8"									17'-0		16		188			15	21.314	3344.5		95
96	18'-4			10"									17'-4		16		188			15	21.650	3369.5		96
97	18'-8			6"									17'-8		17		196			16	21.986	3466.9		97
98	19'-0			8"									18'-0		17		196			16	22.322	3491.9		98
99	19'-4			10"									18'-4		17		196			16	22.658	3516.9		99
100	19'-8			6"									18'-8		18		204			17	22.994	3614.3		100
101	20'-0			8"									19'-0		18		204			17	23.330	3639.3		101
102	20'-4			10"									19'-4		18		204			17	23.666	3664.3		102
103	20'-8			6"									19'-8		19		212			18	24.002	3761.7		103
104	21'-0			8"									20'-0		19		212			18	24.338	3786.7		104
105	21'-4			10"									20'-4		19		212			18	24.674	3811.7		105
106	21'-8			6"									20'-8		20		220			19	25.010	3909.1		106
107	22'-0			8"									21'-0		20		220			19	25.346	3934.1		107
108	22'-4			10"									21'-4		20		220			19	25.682	3959.1		108
109	22'-8			6"									21'-8		21		228			20	26.018	4056.5		109
110	23'-0			8"									22'-0		21		228			20	26.354	4081.5		110
111	23'-4			10"									22'-4		21		228			20	26.690	4106.5		111
112	23'-8			6"									22'-8		22		236			21	27.026	4203.9		112
113	24'-0			8"									23'-0		22		236			21	27.362	4228.9		113
114	24'-4			10"									23'-4		22		236			21	27.698	4253.9		114
115	24'-8			6"									23'-8		23		244			22	28.034	4351.3		115
116	25'-0			8"									24'-0		23		244			22	28.370	4376.3		116
117	25'-4			10"									24'-4		23		244			22	28.706	4401.3		117
118	25'-8			6"									24'-8		24		252			23	29.042	4498.7		118
119	26'-0			8"									25'-0		24		252			23	29.378	4523.7		119
120	26'-4			10"									25'-4		24		252			23	29.714	4548.7		120
121	26'-8			6"									25'-8		25		260			24	30.050	4646.1		121
122	27'-0			8"									26'-0		25		260			24	30.386	4671.1		122
123	27'-4			10"									26'-4		25		260			24	30.722	4696.1		123
124	27'-8			6"									26'-8		26		268			25	31.058	4793.5		124
125	28'-0			8"									27'-0		26		268			25	31.394	4818.5		125
126	28'-4			10"									27'-4		26		268			25	31.730	4843.5		126
127	28'-8	↓	↓	6"	↓	↓	↓	↓	↓	↓		↓	27'-8	↓	27		276	↓	↓	26	32.066	4940.9	↓	127
128	29'-0	9'-0	10"	8"	72"	84"	2'-0	8'-8	12'-8	20	2'-0	36	28'-0	72	27	8'-8	276	3'-6	8	26	32.402	4965.9	245	128

TABLE "A"			
RCP		CMP	
DIA.	CU.YDS.	DIA.	CU.YDS.
48"	0.566	60"	0.606
54"	0.711	66"	0.733
60"	0.873	72"	0.873
66"	1.051	78"	1.024
72"	1.245	84"	1.188

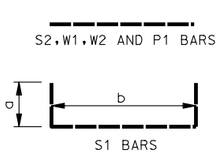

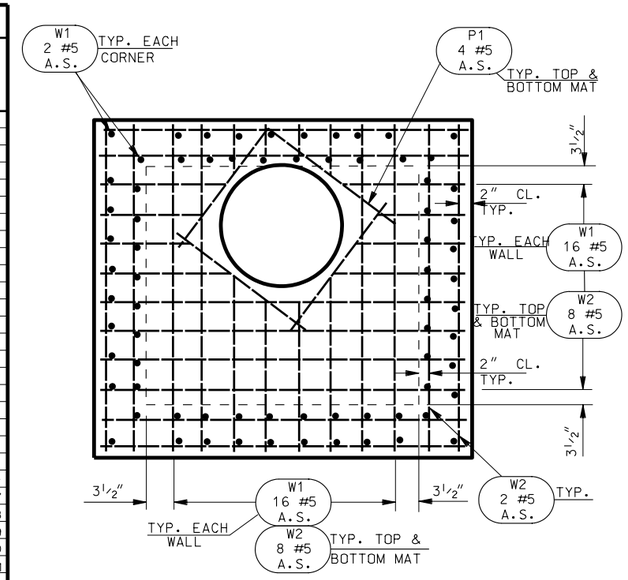

PLAN OF TOP SLAB

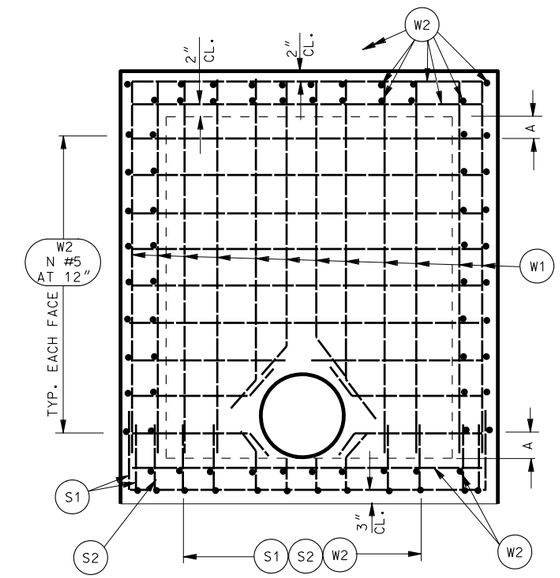

TYPICAL WALL ELEVATION

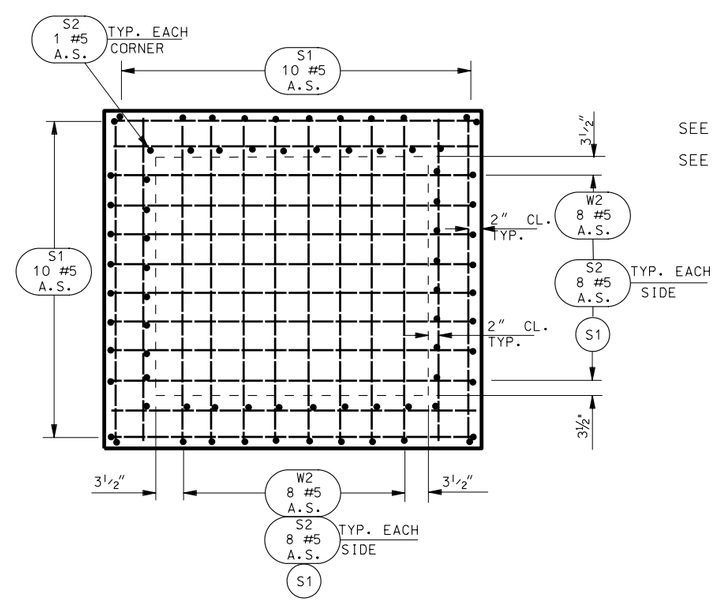

PLAN OF BOTTOM SLAB

SEE STD DWG DB 3A FOR MANHOLE OPENING DIMENSIONS.

SEE STD DWG DB 3B FOR NOTES.

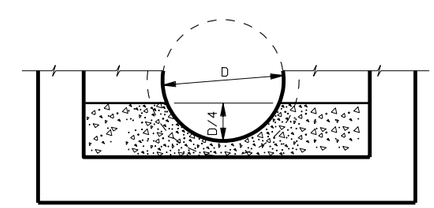

FORMED INVERT DETAIL

NO.	DATE	APPR.	REMARKS

REVISIONS

UTAH DEPARTMENT OF TRANSPORTATION
STANDARD DRAWINGS FOR ROAD AND BRIDGE CONSTRUCTION
SALT LAKE CITY, UTAH

RECOMMENDED FOR APPROVAL — JAN.01,2005 DATE
CHAIRMAN STANDARDS COMMITTEE
APPROVED — JAN.01,2005 DATE
DEPUTY DIRECTOR

STANDARD DIVERSION BOX WITH MANHOLE COVER 48" TO 72" RCP AND 60" TO 84" CMP

STANDARD DRAWING TITLE

STD DWG
DB 3C

DGN File: N:\Esd\Standard Drawings\Imperial\2005Approved\Diversion Boxes (DB)\db03c.dgn
15-DEC-2004