END SECTIONS FOR CIRCULAR PIPE CORRUGATIONS

3″ × 1″ ; 2 2/3″ × 1/2″
5″ × 1″ ; 3/4″ × 3/4″ × 7 1/2″
AND 3/4″ × 1″ × 11 1/2″

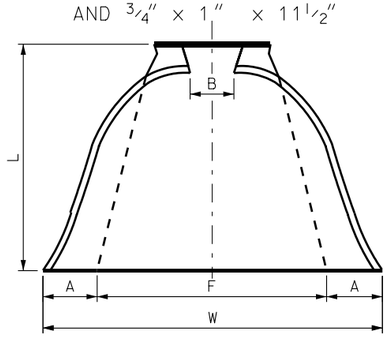

PLAN

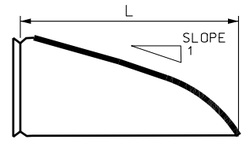

TYPICAL CROSS SECTION

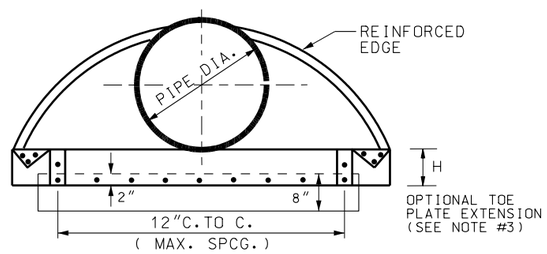

ELEVATION

LINE NO.	PIPE DIA	THICK--NESS	END SECTION DIMENSIONS						
			A	B	H	F	L	W MAX.WIDTH	APPROXIMATE AVERAGE END SECTION SLOPE
	inch	inch	inch	inch	inch	inch	inch	inch	
1	12	0.064	5	7	6	22	21	44	2 1/4
2	15	0.064	6	8	6	28	26	52	2 1/4
3	18	0.064	7	10	6	34	31	58	2 1/8
4	21	0.064	8	12	6	40	36	66	2 1/8
5	24	0.064	9	13	6	46	41	72	2 1/8
6	30	0.079	11	16	8	55	51	88	2 1/8
7	36	0.079	13	19	9	70	60	105	2
8	42	0.109	15	25	10	82	69	122	2 1/8
9	48	0.109	17	29	12	88	78	131	2
10	54	0.109	17	33	12	100	84	143	2
11	60	0.109	17	36	12	112	87	157	1 7/8
12	66	0.109	17	39	12	118	87	162	1 5/8
13	72	0.109	17	44	12	120	87	169	1 7/8
14	78	0.109	17	48	12	130	87	178	1 3/8
15	84	0.109	17	52	12	136	87	184	1 1/3
16	90	0.109	17	58	12	142	87	188	1 1/4
17	96	0.109	17	58	12	144	87	197	1 1/8

FILL SLOPE NEED NOT MATCH THE END SECTION SLOPE.
SHAPE FILL AT EACH SITE TO FIT.

1. SOME LARGER SIZES MAY REQUIRE FIELD ASSEMBLY.
2. OPTIONAL TOE PLATES MAY BE PROVIDED TO DEPTH SPECIFIED.
3. FOR 78″ × 52″ AND 84″ × 58″ SIZES REINFORCED EDGES TO BE SUPPLEMENTED WITH GALVANIZED STIFFENER ANGLES. THE ANGLES TO BE ATTACHED BY GALVANIZED NUTS AND BOLTS FOR STEEL UNITS OR ALUMINIUM NUTS AND BOLTS FOR ALUMINIUM UNITS.

TYPE 1

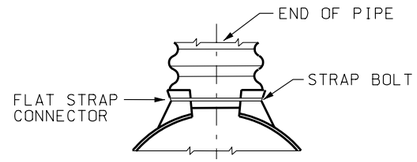

AVALIABLE IN SIZES 12″ THROUGH 24″ ROUND AND 17″ × 13″ THROUGH 28″ × 22″ PIPE-ARCHES

TYPE 2

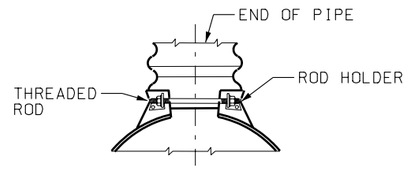

AVALIABLE IN SIZES 30″ THROUGH 96″ ROUND AND 35″ × 24″ THROUGH 57″ × 38″ PIPE-ARCHES

TYPE 3

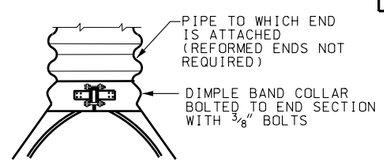

AVAILABLE FOR ALL ROUND AND PIPE ARCH SIZES SHOWN (TYPE 1 AND TYPE 2 CONDITIONS ARE RECOMMENDED FOR THE SMALLER SIZES WITH ANNULAR ENDS)

END SECTIONS FOR CORRUGATED METAL PIPE ARCHES

3″ × 1″ ; 5″ × 1″
AND 2 2/3″ × 1/2″

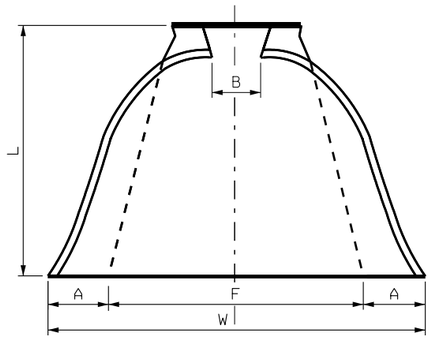

PLAN

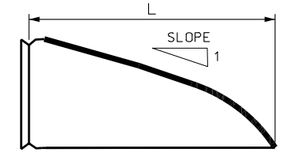

TYPICAL CROSS SECTION

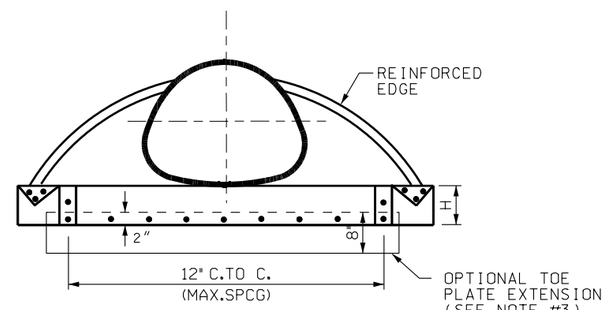

ELEVATION

LINE NO.	SPAN × RISE	EQUIV ROUND	THICKNESS		END SECTION DIMENSIONS						
			GALV. STEEL	ALUM.	A MIN.	B MAX.	H MIN.	F MIN.	L ±50	W MAX.WIDTH	APPROXIMATE AVERAGE AND SECTION SLOPE
	inch	inch	inch	inch	inch	inch	inch	inch	inch	inch	
1	17x13	15	0.064	5	5	9	6	28	20	52	2 1/8
2	21x15	18	0.064	6	6	11	6	34	24	58	2
3	24x18	21	0.064	7	7	12	6	40	28	63	2 1/8
4	28x20	24	0.064	7	7	16	6	46	32	70	2
5	35x24	30	0.079	9	9	16	6	58	39	85	1 7/8
6	42x29	36	0.079	11	11	18	7	73	46	104	1 7/8
7	49x33	42	0.109	12	12	21	9	82	53	117	1 3/4
8	57x38	48	0.109	16	16	26	12	88	62	132	1 7/8
9	64x43	54	0.109	17	17	30	12	100	69	144	1 7/8
10	71x47	60	0.109	17	17	36	12	112	77	156	1 7/8
11	77x52	66	0.109	17	17	36	12	124	77	167	1 5/8
12	83x57	72	0.109	17	17	44	12	130	77	177	1 1/2

FILL SLOPE NEED NOT MATCH THE END SECTION SLOPE.
SHAPE FILL AT EACH SITE TO FIT.

1. SOME LARGER SIZES MAY REQUIRE FIELD ASSEMBLY.
2. OPTIONAL TOE PLATES MAY BE PROVIDED TO DEPTH SPECIFIED.
3. FOR 78″ × 52″ AND 84″ × 58″ SIZES REINFORCED EDGES TO BE SUPPLEMENTED WITH GALVANIZED STIFFENER ANGLES. THE ANGLES TO BE ATTACHED BY GALVANIZED NUTS AND BOLTS FOR STEEL UNITS OR ALUMINIUM NUTS AND BOLTS FOR ALUMINIUM UNITS.
4. PLACE ANGLE REINFORCMENT UNDER THE CENTER PANEL SEAMS ON THE 88″ × 58″ SIZES.

APPLICABLE SPECIFICATIONS (CIRCULAR AND ARCH PIPE)

1. CONFORM TO:
   AASHTO M 218 (GALVANIZED STEEL SHEET)
   AASHTO M 197 (ALUMINUM ALLOY SHEET)
2. ALL 3 PIECE BODIES TO HAVE 12 GAUGE MIN. SIDES AND 10 GAUGE MIN.CENTER PANELS. MULTIPLE PANEL BODIES TO HAVE SEAMS WHICH ARE TO BE TIGHTLY JOINED BY GALVANIZED RIVETS OR BOLTS FOR STEEL UNITS AND ALUMINUM RIVETS OR BOLTS FOR ALUMINUM UNITS.
3. GALVANIZED STEEL OR ALUMINUM TOE PLATE TO BE AVAILABLE AS AN ACCESSORY. WHEN SPECIFIED, USE SAME THICKNESS AS THE END SECTION.
4. GALVANIZED STEEL OR ALUMINUM LIFTING LUG AVAILABLE AS AN ACCESSORY, WHEN SPECIFIED.
5. END SECTIONS CAN BE USED WITH ANY OR PIPE OR PIPE ARCH WALL THICKNESS SPECIFIED.

REVISIONS

NO.	DATE	APPR.	REMARKS

UTAH DEPARTMENT OF TRANSPORTATION
STANDARD DRAWINGS FOR ROAD AND BRIDGE CONSTRUCTION
SALT LAKE CITY, UTAH

RECOMMENDED FOR APPROVAL — JAN.01,2005 DATE
CHAIRMAN STANDARDS COMMITTEE
APPROVED — JAN.01,2005 DATE
DEPUTY DIRECTOR

METAL CULVERT END SECTION

STANDARD DRAWING TITLE

STD DWG
DG 8

DGN File:N:\Esat\Standard_Drawings\Imperial\2005\Approved\Drainage (DG)\dg08.dgn
15-DEC-2004