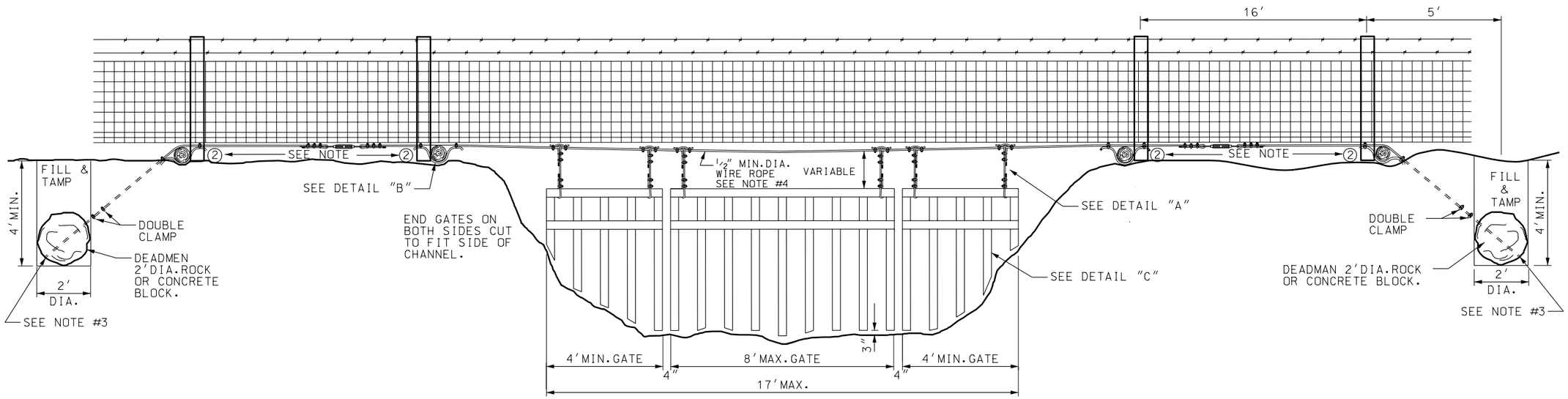

INSTALLATION DETAIL

DETAIL "A"

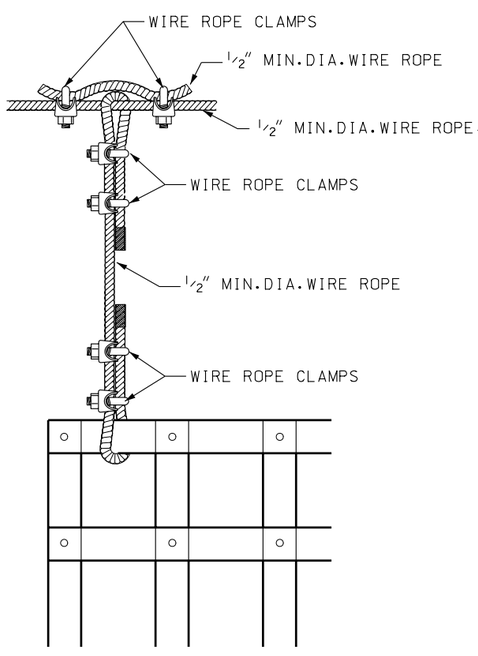

DETAIL "B"

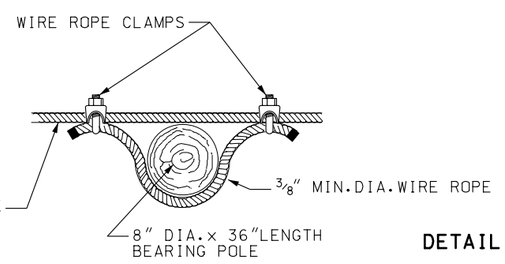

DETAIL "C"

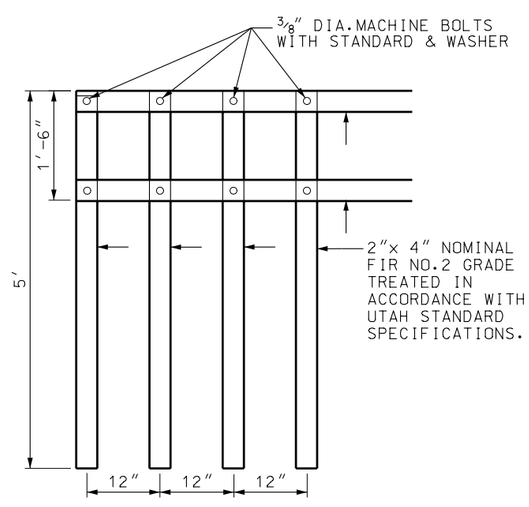

NOTES:

1. INSTALL BEARING POLES,DEADMAN AND TURN BUCKLE THE SAME ON BOTH SIDES ON THE CHANNEL.
2. INSTALL WIRE ROPE ON THE UPSTREAM SIDE OF THE FENCE POSTS.
3. WRAP WIRE ROPE AROUND ROCK AND CLAMP WITH A DOUBLE CLAMP.
4. USE ½″ DIA. WIRE 6″× 12″ WITH A BREAKING STRENGTH OF 10,000 lbs.

DETAIL "D"

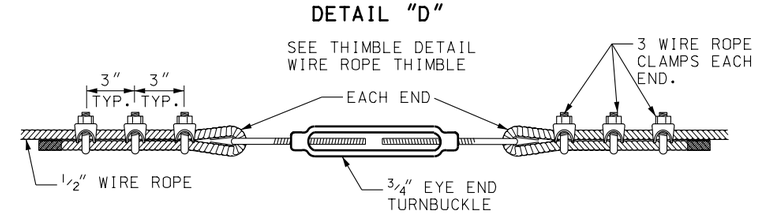

THIMBLE DETAIL

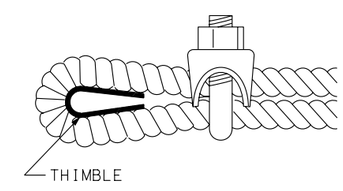

REVISIONS

NO.	DATE	APPR.	REMARKS
1	02/24/05	B.A.	CORRECTED TYPOGRAPHICAL ERRORS.

UTAH DEPARTMENT OF TRANSPORTATION
STANDARD DRAWINGS FOR ROAD AND BRIDGE CONSTRUCTION
SALT LAKE CITY, UTAH

RECOMMENDED FOR APPROVAL — FEB.24,2005 DATE
CHAIRMAN STANDARDS COMMITTEE
APPROVED — FEB.24,2005 DATE
DEPUTY DIRECTOR

STANDARD DRAWING TITLE
SWING GATE TYPE I FOR GATES LESS THAN 17′

STD DWG
FG 3

DGN File:N:\Esd\Standard_Drawings\Imperial\2005Approved\xChanges\Approved\fg03.dgn
14-MAR-2005