STANDARD SCREW GATE AND FRAME DIMENSIONS FOR 5'-0 OF HEAD OR LESS

SIZE OF CLEAR •• OPENING	A	18"	24"	18"	24"	30"	36"	48"	24"	30"	36"	42"	48"	24"	30"	36"	42"	48"	60"	24"	30"	36"	42"	48"	60"	72"	24"	30"	36"	42"	48"
	B	18"	18"	24"	24"	24"	24"	24"	30"	30"	30"	30"	30"	36"	36"	36"	36"	36"	36"	42"	42"	42"	42"	42"	42"	42"	48"	48"	48"	48"	48"
MINIMUM GATE DIMENSION	HEIGHT	18"	18"	24"	24"	24"	24"	24"	30"	30"	30"	30"	30"	36"	36"	36"	36"	36"	36"	42"	42"	42"	42"	42"	42"	42"	48"	48"	48"	48"	48"
	WIDTH	22"	28"	22"	28"	34"	41"	53"	28"	34"	41"	47"	52"	29"	35"	41"	47"	54"	67"	29"	35"	41"	47"	54"	67"	79"	30"	36"	42"	48"	54"
• FRAME HEIGHTS	5'	X	X	X	X	X	X		X	X				X	X					X	X						X	X			
	6'	X	X	X	X	X	X		X	X	X	X		X	X	X	X			X	X	X	X				X	X	X	X	
	7'	X	X	X	X	X	X	X	X	X	X	X	X	X	X	X	X	X		X	X	X	X	X			X	X	X	X	X
	8'	X	X	X	X	X	X	X	X	X	X	X	X	X	X	X	X	X		X	X	X	X	X			X	X	X	X	X
	10'	X	X	X	X	X	X	X	X	X	X	X	X	X	X	X	X	X	X	X	X	X	X	X	X	X	X	X	X	X	X
STEM DIAMETER		1.12"	1.12"	1.12"	1.12"	1.12"	1.12"	1.12"	1.12"	1.12"	1.12"	1.12"	1.50"	1.12"	1.12"	1.12"	1.50"	1.50"	1.50"	1.12"	1.12"	1.50"	1.50"	1.50"	1.50"	2.00"	1.50"	1.50"	1.50"	1.50"	1.50"
WHEEL DIAMETER		10"	10"	10"	10"	10"	14"	24"	14"	14"	14"	18"	24"	14"	18"	18"	24"	24"	30"	18"	18"	24"	24"	30"	24"	30"	24"	24"	24"	30"	30"

• X INDICATES THE FRAME HEIGHT OPTIONS AVAILABLE WITH THE SPECIFIC GATE SIZES

•• USE SCREW GATES SELECTED FROM THESE BASIC SIZE WITH EITHER FLUMES, ROUND PIPE OR PIPE ARCH INSTALLATIONS.

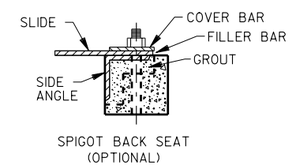

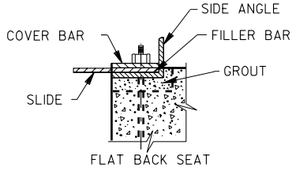

SECTION A-A

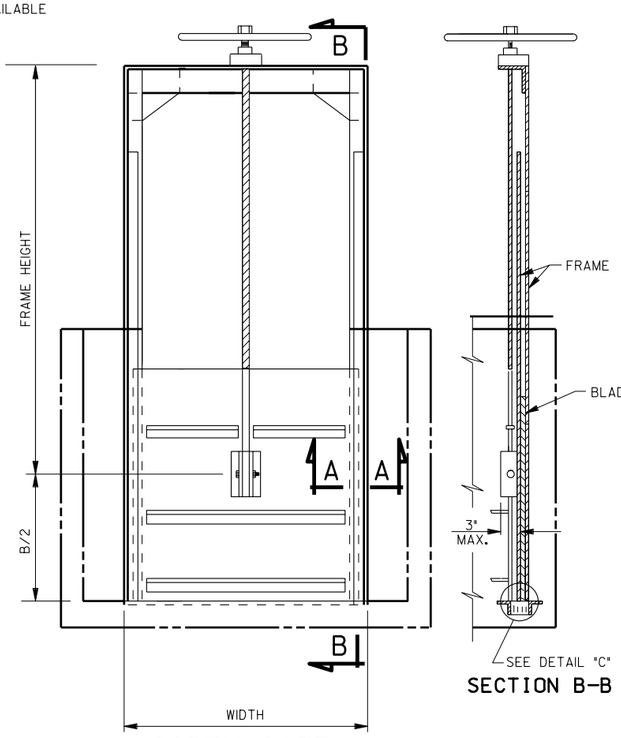

SECTION B-B

SCREW GATE INSTALLATION DETAIL FOR FLUME OUTLET

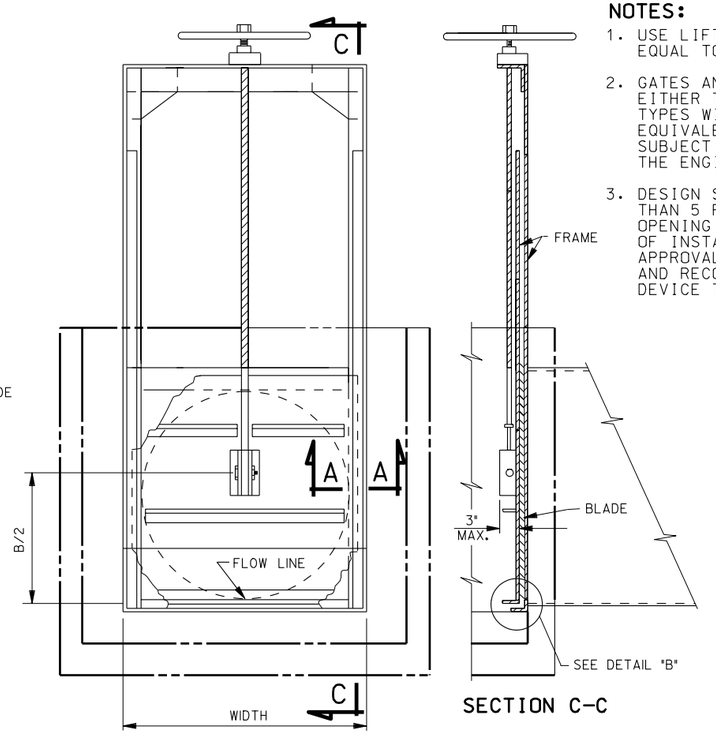

SECTION C-C

SCREW GATE INSTALLATION DETAIL FOR PIPE OUTLET

(ARCH PIPE INSTALLATION SIMILAR)

NOTES:

1. USE LIFT GATE WHEN OPENING IS EQUAL TO OR EXCEEDS AN AREA OF 5 SQUARE FEET.
2. GATES AND FRAMES: OF THE TYPE SHOWN AND BE EITHER THE FLAT BACK SEAT OR SPIGOT BACK SEAT TYPES WITH A THROUGH FLUSH BOTTOM OPENING. EQUIVALENT GATE AND FRAME TYPES ACCEPTABLE, SUBJECT TO THE APPROVAL OF SHOP DRAWING BY THE ENGINEER.
3. DESIGN SLIDE GATES AND FRAMES FOR NOT LESS THAN 5 FEET OF FACE PRESSURE ABOVE THE GATE OPENING AND ZERO BACK PRESSURE. IN ALL CASES OF INSTALLATION, SUBMIT TO THE ENGINEER FOR APPROVAL THE MANUFACTURERS SPECIFICATIONS AND RECOMMENDATIONS TO INCLUDE LIFTING DEVICE TYPE.

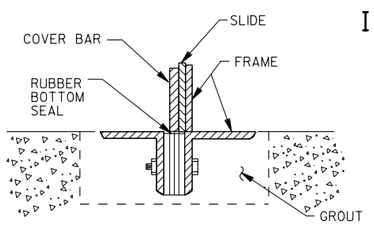

DETAIL "C"

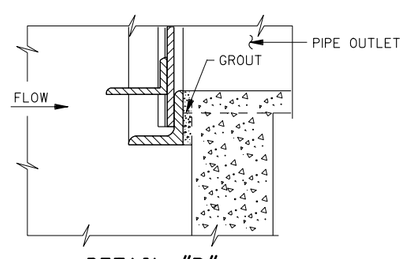

DETAIL "B"

(TYPICAL WALL SILL INSTALLATION)

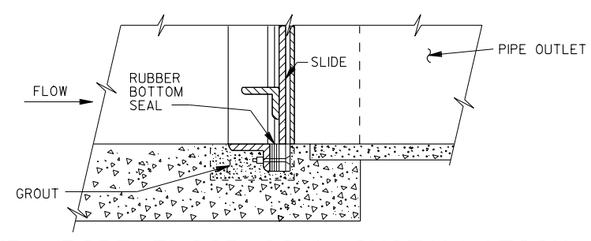

TYP. PIPE FLOOR SILL INSTALLATION

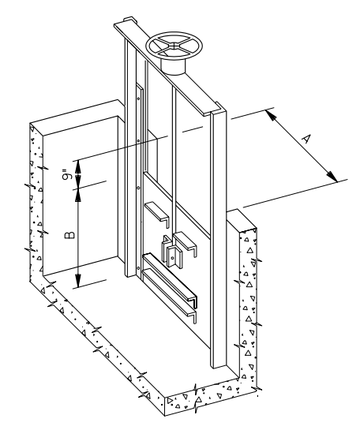

FLUME OUTLET DETAIL

NO.	DATE	APPR.	REVISIONS	REMARKS

UTAH DEPARTMENT OF TRANSPORTATION

STANDARD DRAWINGS FOR ROAD AND BRIDGE CONSTRUCTION

RECOMMENDED FOR APPROVAL — JAN.01,2005 DATE

CHAIRMAN STANDARDS COMMITTEE APPROVED — JAN.01,2005 DATE

DEPUTY DIRECTOR

STANDARD SCREW GATE AND FRAME

STD DWG GF 15

DGN File:N:\Esd\Standard Drawings\Imperial\2005Approved\Grates Frames and Trash Racks (GF)\gf15.dgn

15-DEC-2004