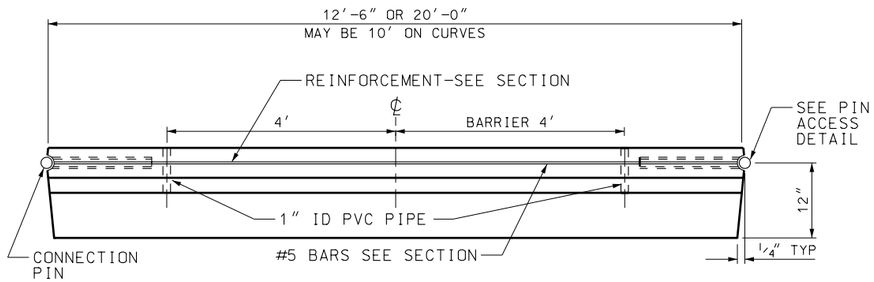

PLAN ELEVATION

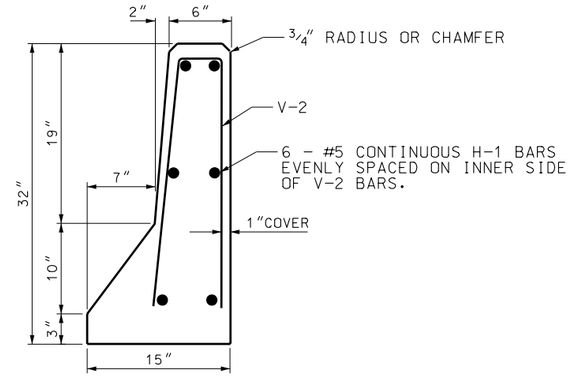

END ELEVATION

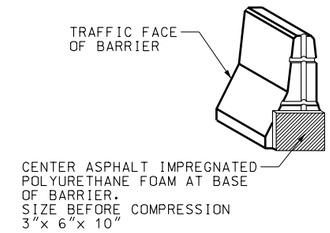

BARRIER SEAL

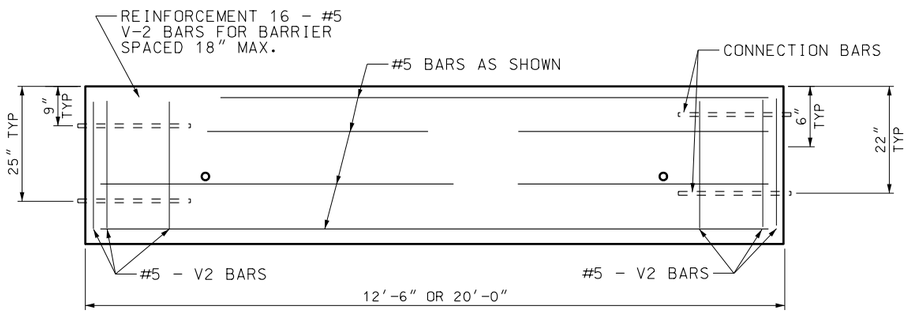

FRONT ELEVATION

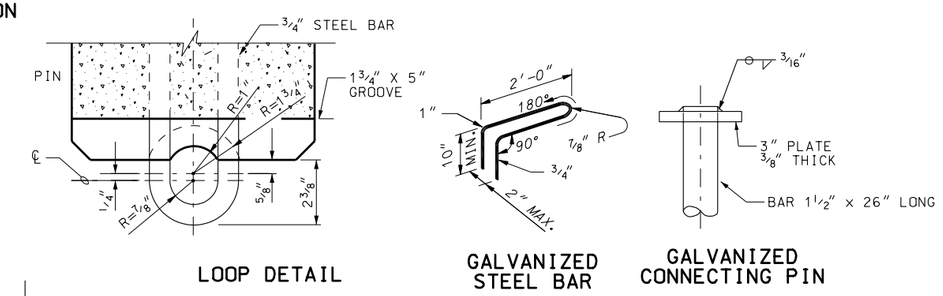

LOOP DETAIL

GALVANIZED STEEL BAR

GALVANIZED CONNECTING PIN

CONNECTION DETAILS

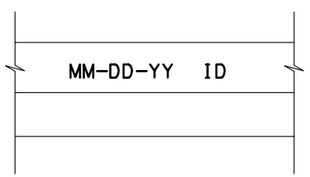

BARRIER MARKINGS

SEE NOTE 6

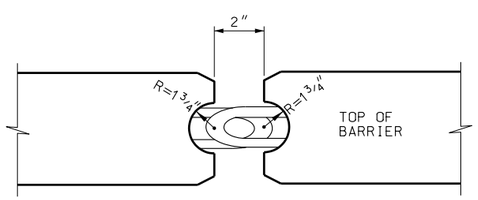

PIN ACCESS DETAIL

METAL REINFORCEMENT TABLE				
MARK	LOCATION	BAR SIZE	NO. BARS	SKETCH
H-1	HORIZONTAL IN BARRIER TIED INSIDE V-1 BARS	#5	6	19′-3″
V-2	VERTICAL IN BARRIER (3) EACH END	#5	16	TOTAL LENGTH 4′-9″; 2 3/8″R; 4 3/8″; 8″; 6°; 2′-1 3/8″

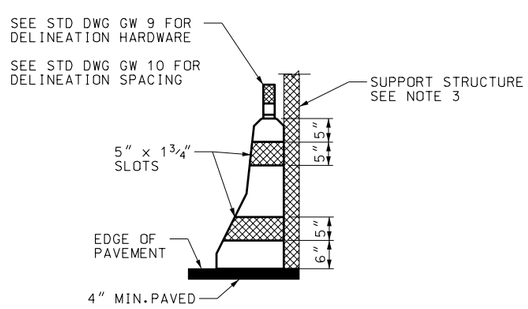

BARRIER SLOT DETAIL

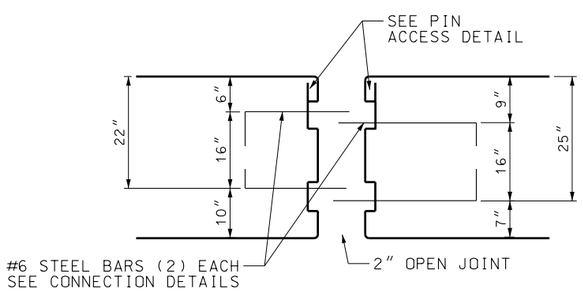

LOOP LOCATION ELEVATION

NOTES:

1. USE 3/4″ RADIUS ON CHAMFER ON EXPOSED CONCRETE CORNER.
2. PLACE AN ADEQUATE AMOUNT OF SILICONE ADHESIVE ON BOTTOM OF WASHER BEFORE INSERTING PIN TO HOLD IN PLACE AND PREVENT EASY HAND REMOVAL.
3. PLACE PRECAST HALF BARRIER WHERE THERE IS A SUPPORT STRUCTURE BEHIND EACH SECTION (IE:SOUND WALL,MSE WALL)
4. DO NOT USE PRECAST HALF BARRIER AS AN ALTERNATE, OR IN CONJUNCTION WITH PRECAST CONCRETE FULL BARRIER SECTION IN A WORK ZONE.
5. USE COATED REINFORCING STEEL EXCEPT AS NOTED.
6. MARK EACH BARRIER WITH 2″ NUMBERS INDICATE THE DATE OF CASTING AND IDENTIFICATION NUMBER SUPPLIED BY THE INSPECTOR, IMPRESSED 1/4″ DEEP INTO THE TOP CENTER OF THE BARRIER.

REVISIONS

NO.	DATE	APPR.	REMARKS

UTAH DEPARTMENT OF TRANSPORTATION
STANDARD DRAWINGS FOR ROAD AND BRIDGE CONSTRUCTION
SALT LAKE CITY, UTAH

RECOMMENDED FOR APPROVAL — JAN.01.2005 DATE
CHAIRMAN STANDARDS COMMITTEE APPROVED — JAN.01.2005 DATE
DEPUTY DIRECTOR

PRECAST CONCRETE HALF BARRIER STANDARD SECTION

STANDARD DRAWING TITLE

STD DWG
BA 2

DGN File:N:\Esd\Standard.Drawings\Imperial\2005approved\Barriers (BA)\ba02.dgn

15-DEC-2004