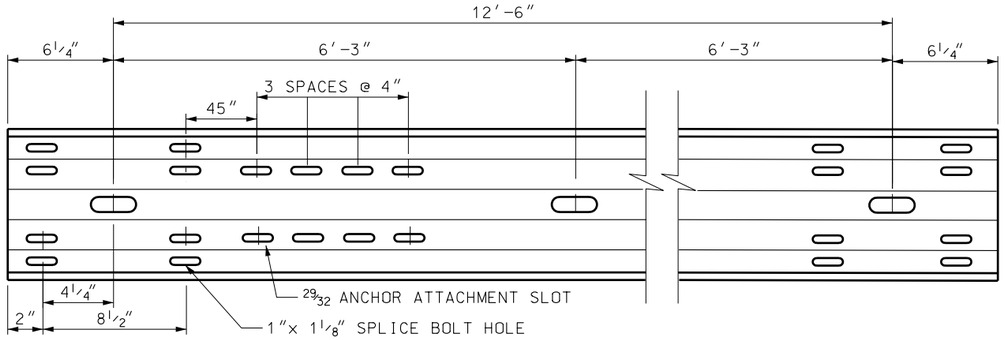

RAIL ELEMENT

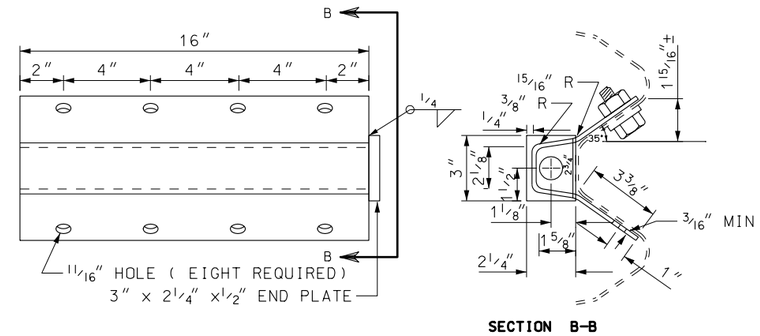

ELEVATION

SECTION B-B

ANCHOR PLATE

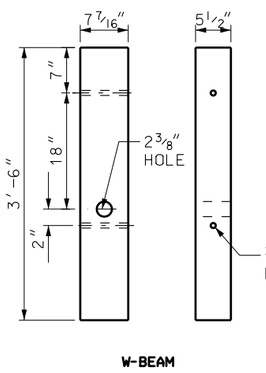

W-BEAM

WOOD BREAKAWAY POST

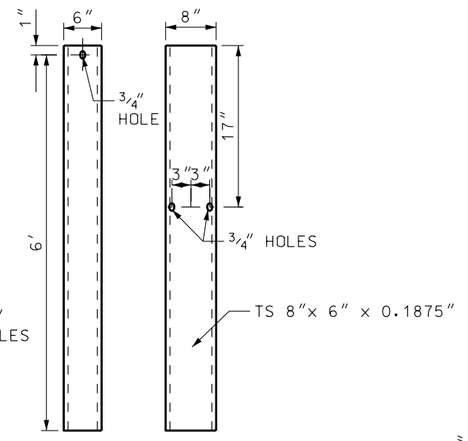

FOUNDATION TUBE

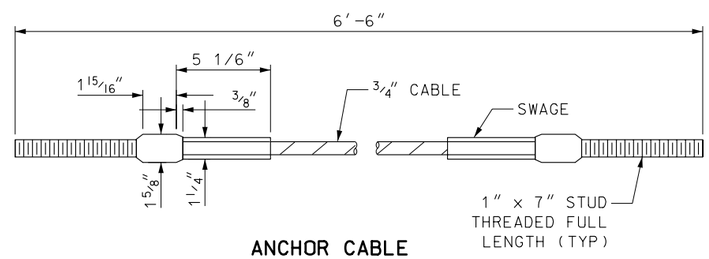

ANCHOR CABLE

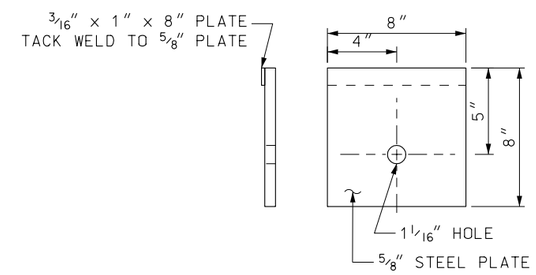

NOTE:
INSTALL BEARING PLATE WITH 5″ PORTION UP. SECURE PLATE TO POST USING TWO NAILS AT TOP OF PLATE.

BEARING PLATE

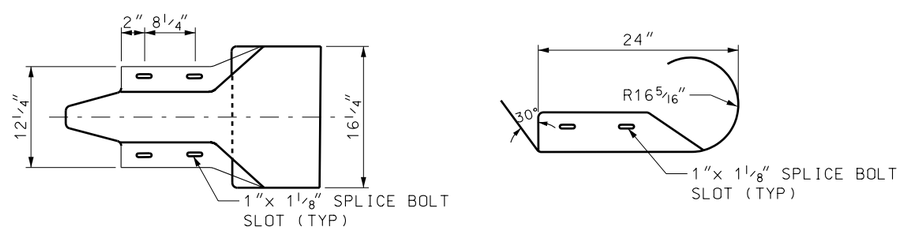

END SECTION (ROUNDED)

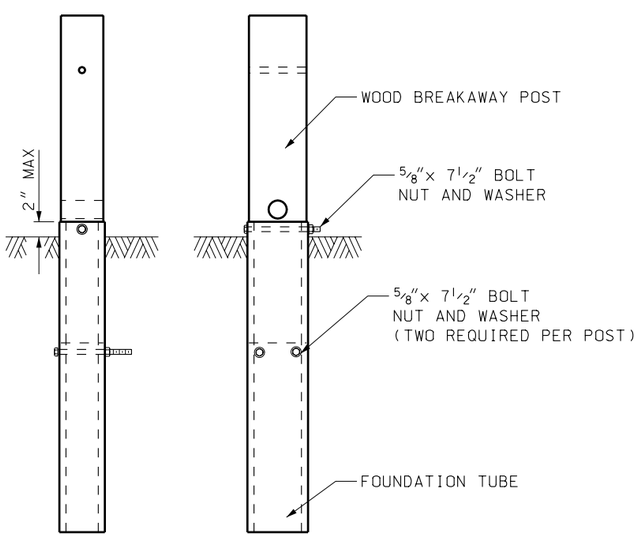

ANCHOR POST ASSEMBLY

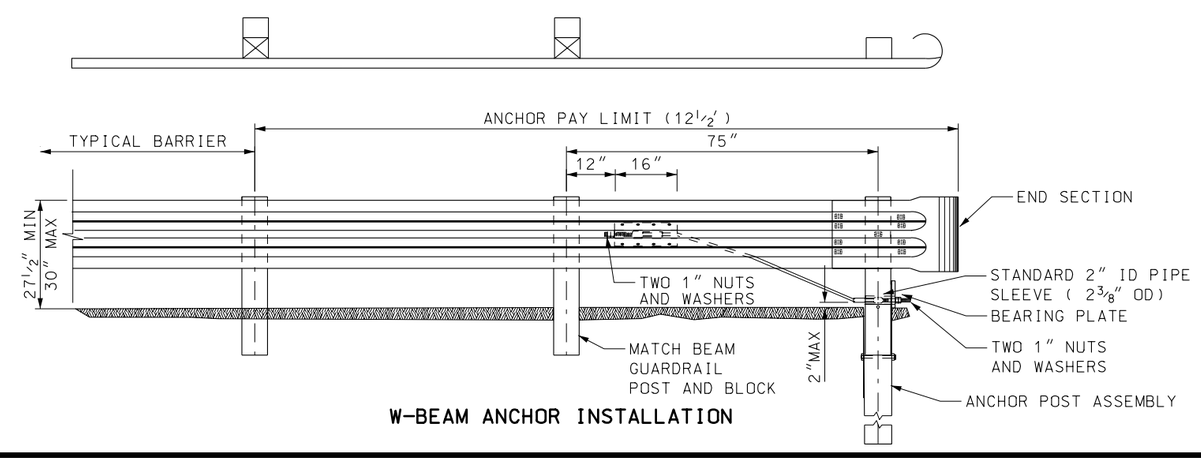

W-BEAM ANCHOR INSTALLATION

REVISIONS

NO.	DATE	APPR.	REMARKS
1	10/27/05	GS	REMOVED SOIL PLATE REQUIREMENT. REVISED W-BEAM ANCHOR INSTALLATION DETAIL.REVISED DIMENSIONS ON BREAKAWAY POST AND FOUNDATION TUBE.

UTAH DEPARTMENT OF TRANSPORTATION
STANDARD DRAWINGS FOR ROAD AND BRIDGE CONSTRUCTION
SALT LAKE CITY, UTAH

RECOMMENDED FOR APPROVAL — OCT.27,2005 DATE
CHAIRMAN STANDARDS COMMITTEE APPROVED — OCT.27,2005 DATE
DEPUTY DIRECTOR

W-BEAM GUARDRAIL
ANCHOR
TYPE I

STANDARD DRAWING TITLE

STD DWG
BA 4D

DGN File:L:\Standard.Drawings\Imperial\2005Approved\ChangeSheetApproved\ba040.dgn
18-NOV-2005