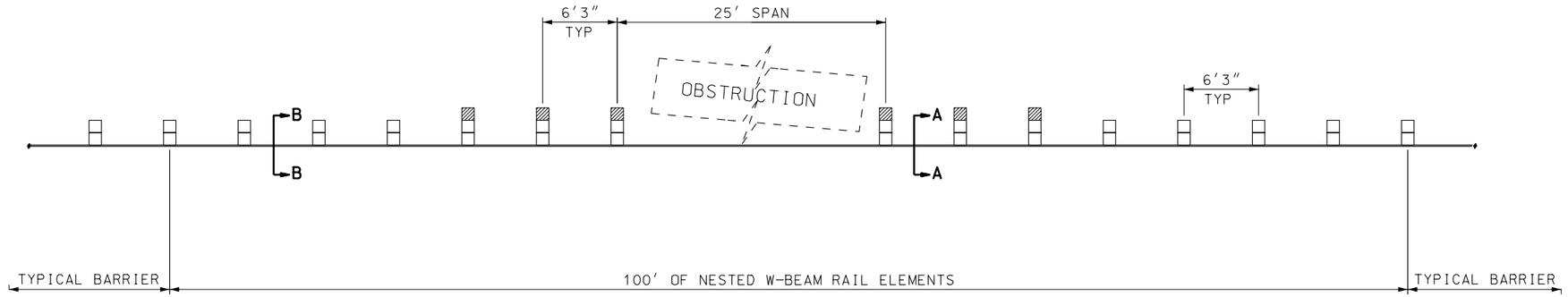

PLAN

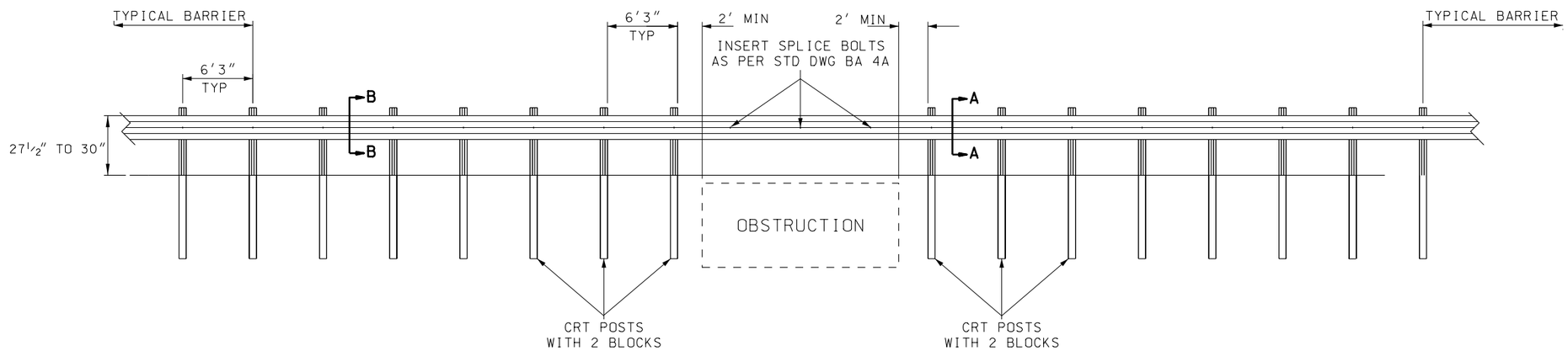

ELEVATION

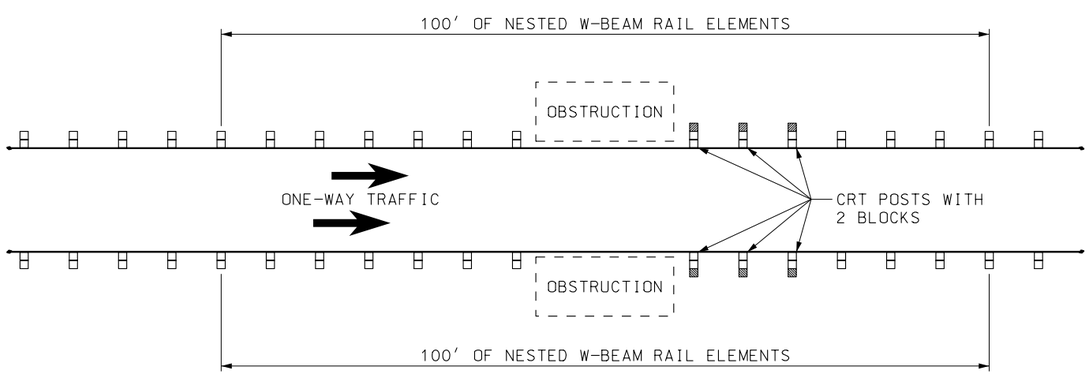

ONE-WAY TRAFFIC LAYOUT

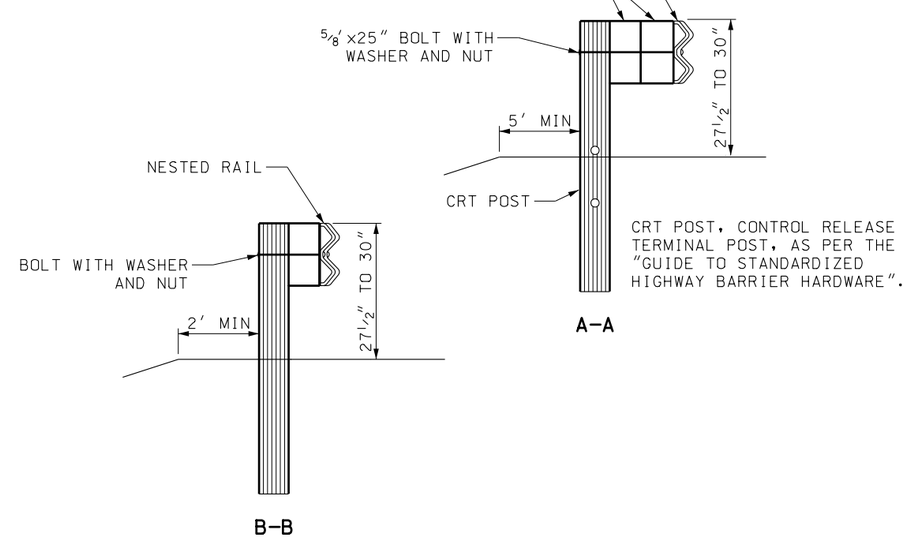

REVISIONS

NO.	DATE	APPR.	REMARKS

UTAH DEPARTMENT OF TRANSPORTATION
STANDARD DRAWINGS FOR ROAD AND BRIDGE CONSTRUCTION
SALT LAKE CITY, UTAH

RECOMMENDED FOR APPROVAL — JAN.01,2005 DATE
CHAIRMAN STANDARDS COMMITTEE APPROVED — JAN.01,2005 DATE
DEPUTY DIRECTOR

W-BEAM GUARDRAIL
NESTED GUARDRAIL
25' SPAN
STANDARD DRAWING TITLE

STD DWG
BA 40

DGN File:N:\Esd\Standard Drawings\Imperial\2005Approved\Barriers (BA)\ba040.dgn
15-DEC-2004