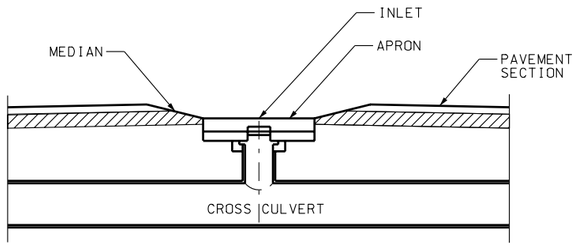

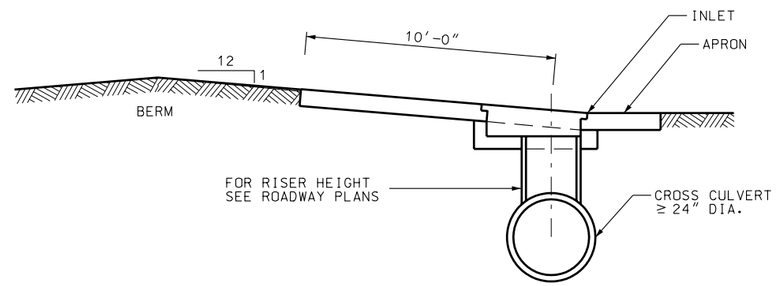

MEDIAN DROP INLET AND APRON SITUATION LAYOUT

NOTES

1. USE COATED BILLET REINFORCING STEEL BARS CONFORMING TO AASHTO M 284 OR M 111 AND M 31 GRADE 60 RESPECTIVELY.
2. USE 24" DIA. PIPE RISER UNLESS OTHERWISE SPECIFIED ON THE PLANS.
3. TYPE II CEMENT (LOW ALKALI) REQUIRED.
4. FOR GRATE AND FRAME SEE STD DWG GF 3.
5. CONSTRUCT A BERM AS PART OF DROP INLET. TYPE "B" DROP INLET ON STD DWG 7A AND 7B DOES NOT REQUIRE A BERM.
6. USE STRAIGHT #5 REBAR AT 18" ON CENTER, EXCEPT AS NOTED OTHERWISE. CUT AND FIELD BEND BARS WHERE NECESSARY TO CLEAR PIPES.
7. REPAIR ANY DAMAGE OR CUTS TO EPOXY COATING.

DESIGN DATA

HS 20 OR INTERSTATE ALTERNATE LOADING IN ACCORDANCE WITH AASHTO 17th EDITION SPECIFICATIONS.

STRUCTURAL STEEL: Fy = 36,000 psi

STRUCTURAL CONCRETE: f'c = 4,000 psi
fy = 60,000 psi
n = 8

QUANTITIES:

(SEE TABLES IN STANDARD DRAWING CB 6B)

APRON DETAIL:

(SEE STANDARD DRAWING CB 6B)

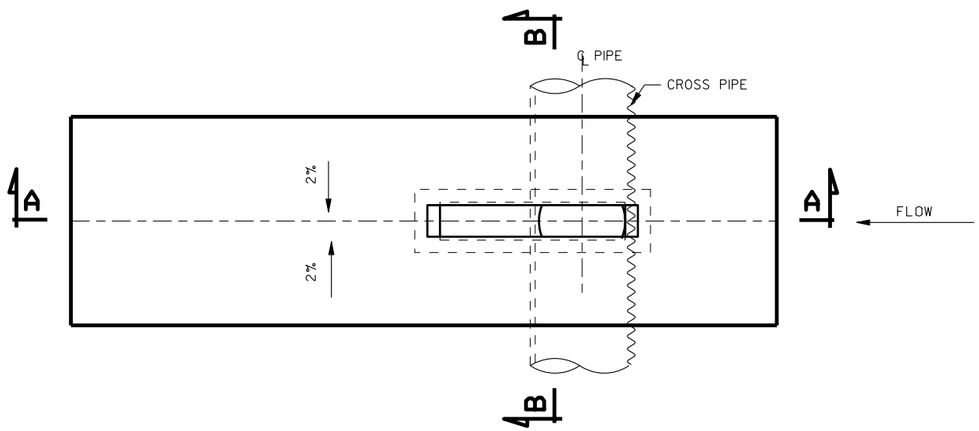

PLAN

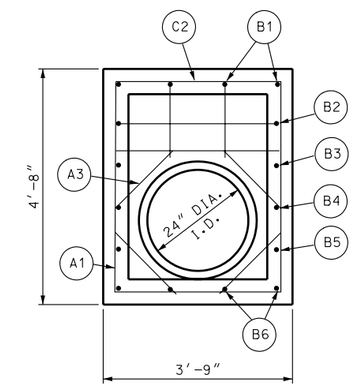

SECTION C-C

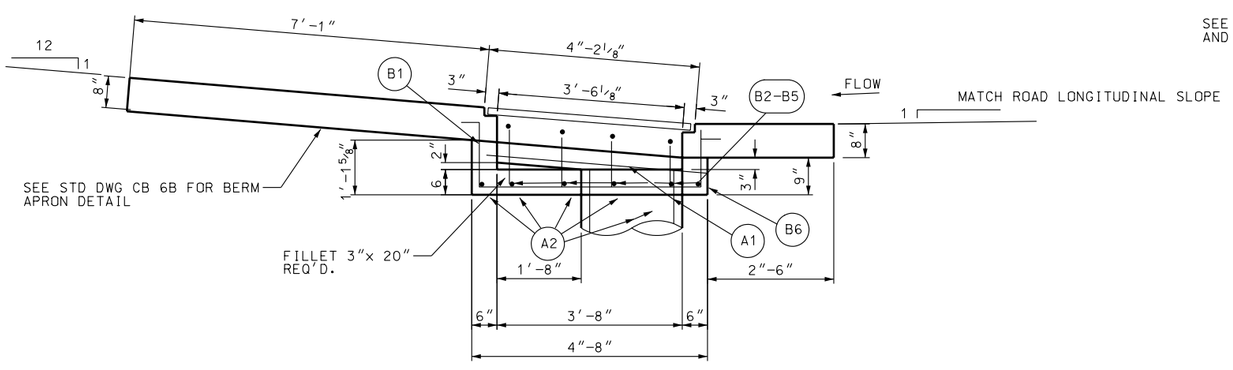

SECTION A-A

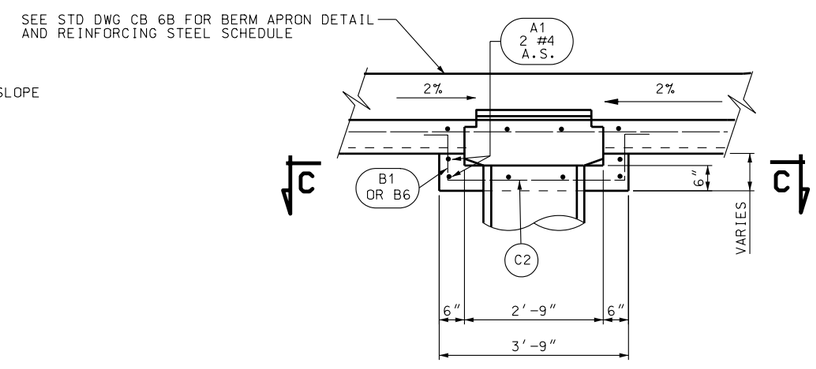

SECTION B-B

NO.	DATE	APPR.	REMARKS

REVISIONS

UTAH DEPARTMENT OF TRANSPORTATION
STANDARD DRAWINGS FOR ROAD AND BRIDGE CONSTRUCTION
SALT LAKE CITY, UTAH

RECOMMENDED FOR APPROVAL — JAN.01,2005 DATE
CHAIRMAN STANDARDS COMMITTEE
APPROVED — JAN.01,2005 DATE
DEPUTY DIRECTOR

DROP INLET TYPE "A"

STANDARD DRAWING TITLE

STD DWG
CB 6A

DGN File:N:\Std\Standard Drawings\Imperial\2005Approved\Catch Basins and Cleanouts (CB)\cb06A.dgn
15-DEC-2004