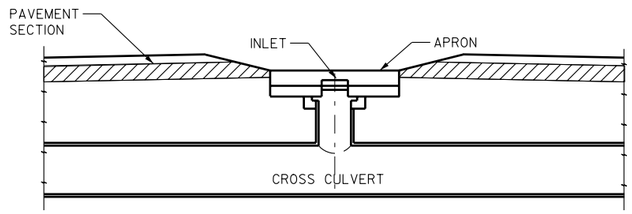

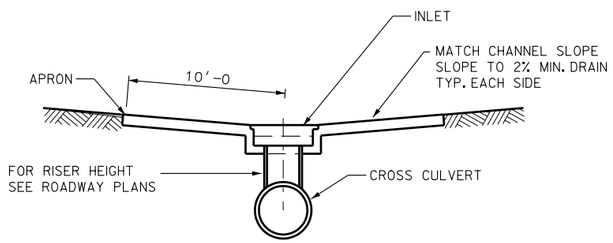

MEDIAN DROP INLET SITUATION LAYOUT

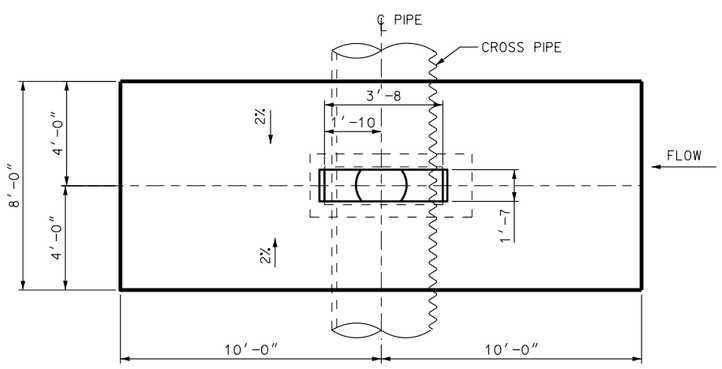

DROP INLET AND APRON LAYOUT PLAN

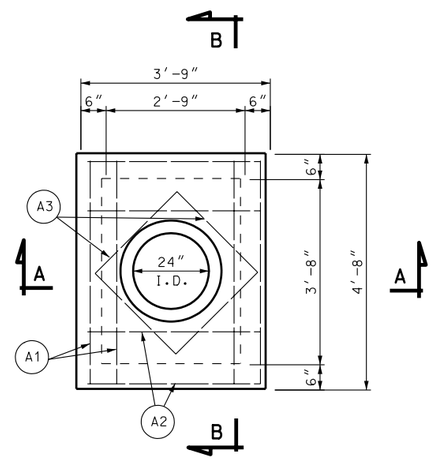

DROP INLET PLAN VIEW

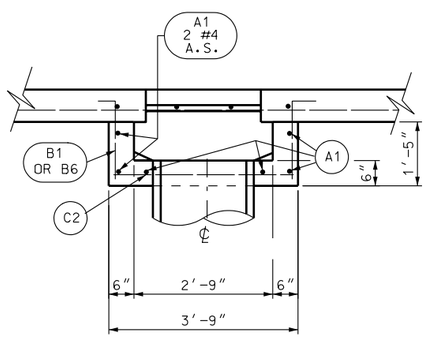

SECTION B-B

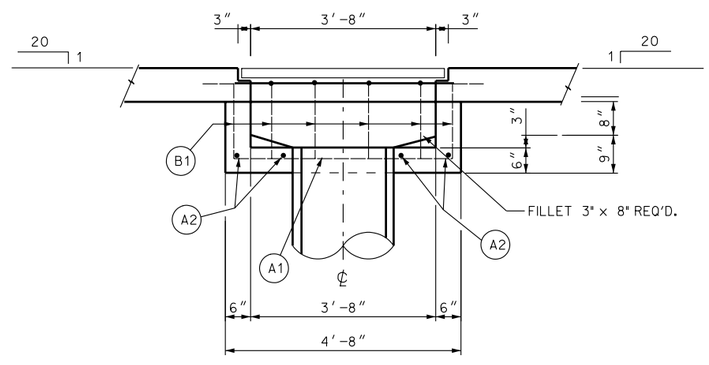

SECTION A-A

NOTES

1. USE COATED DEFORMED BILLET STEEL BARS CONFORMING TO AASHTO M 284 OR M 111 AND M 31 GRADE 60 RESPECTIVELY.
2. USE 18" DIA. PIPE RISER UNLESS OTHERWISE SPECIFIED.
3. TYPE II CEMENT (LOW ALKALI) REQUIRED.
4. FOR GRATE AND FRAME SEE STD DWG GF 3.
5. USE STRAIGHT #5 REBAR AT 18" CENTERS EXCEPT AS NOTED OTHERWISE. CUT AND FIELD BEND BARS WHERE NECESSARY TO CLEAR PIPES.
6. REPAIR ANY DAMAGE OR CUTS TO EPOXY COATING.

DESIGN DATA

HS 20 OR INTERSTATE ALTERNATE LOADING IN ACCORDANCE WITH AASHTO 17th EDITION SPECIFICATIONS.

STRUCTURAL STEEL: Fy = 36,000 psi

STRUCTURAL CONCRETE: f'c = 4,000 psi
fy = 60,000 psi
n = 8

QUANTITIES

SEE TABLES ON STD DWG CB 7B

APRON

SEE STD DWG CB 7B

NO.	DATE	APPR.	REMARKS

REVISIONS

UTAH DEPARTMENT OF TRANSPORTATION
STANDARD DRAWINGS FOR ROAD AND BRIDGE CONSTRUCTION
SALT LAKE CITY, UTAH

RECOMMENDED FOR APPROVAL — JAN.01.2005 DATE
CHAIRMAN STANDARDS COMMITTEE
APPROVED — JAN.01.2005 DATE
DEPUTY DIRECTOR

DROP INLET TYPE "B"

STANDARD DRAWING TITLE

STD DWG
CB 7A

DGN File:N:\Esa\Standard_Drawings\Imperial\2005Approved\Catch Basins and Cleanouts (CB)\cb07A.dgn
15-DEC-2004