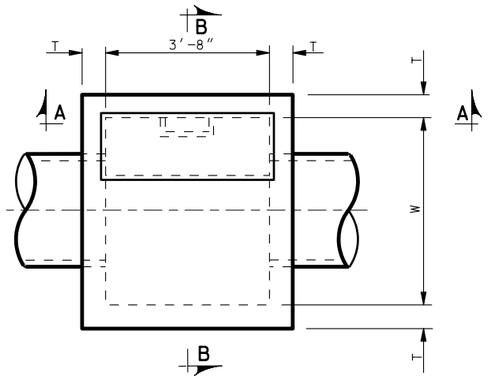

PLAN

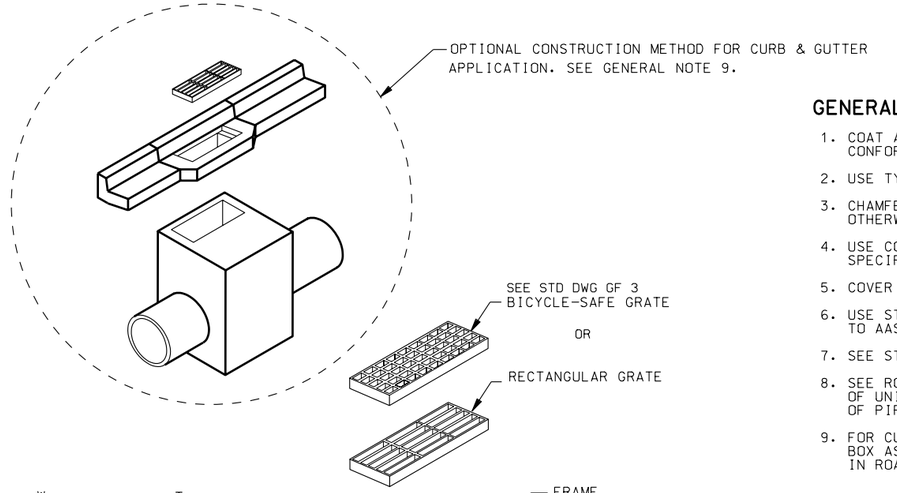

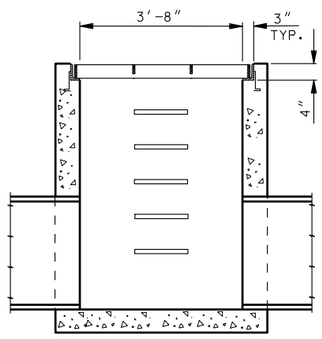

SECTION A-A

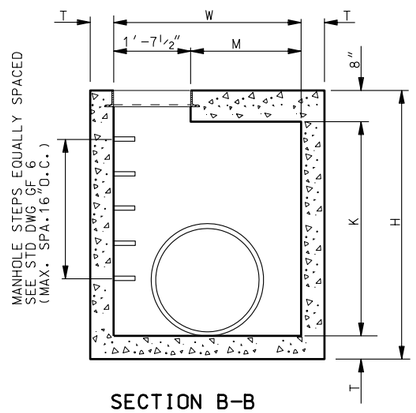

SECTION B-B

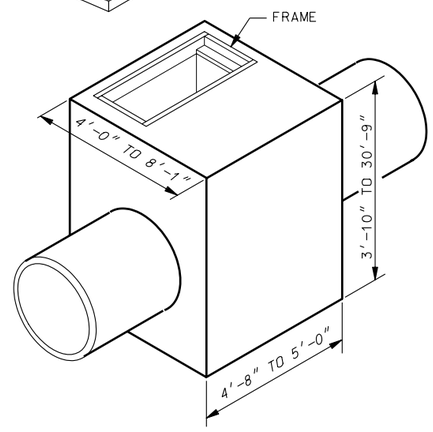

CATCH BASIN

GRATE AND FRAME APPLICATION

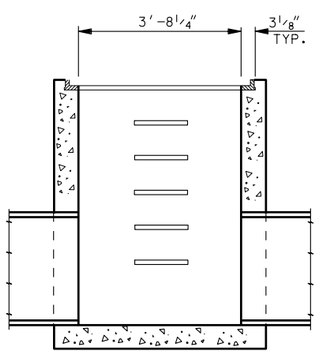

SECTION A-A

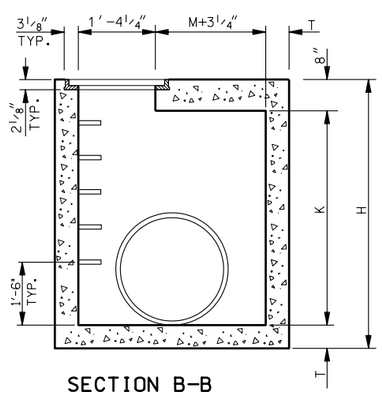

SECTION B-B

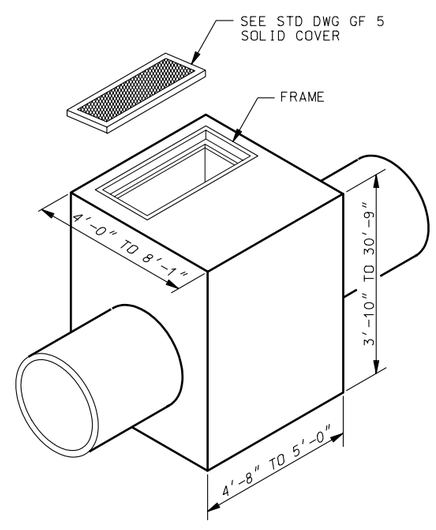

CLEANOUT BOX

SOLID COVER APPLICATION

GENERAL NOTES FOR CB 9A TO CB 9D

1. COAT ALL REINFORCING STEEL, DEFORMED BILLET-STEEL BARS CONFORMING TO AASHTO DESIGNATION M 31, GRADE 60.
2. USE TYPE II CEMENT (LOW ALKALI) UNLESS SPECIFIED OTHERWISE.
3. CHAMFER ¾" ALL EXPOSED CONCRETE CORNERS EXCEPT WHERE NOTED OTHERWISE.
4. USE CONCRETE CLASS AA(AE) FOR ALL CAST-IN-PLACE CONCRETE EXCEPT WHERE SPECIFIED OTHERWISE.
5. COVER TO REINFORCING 2" : EXCEPT WHERE NOTED OTHERWISE.
6. USE STRUCTURAL CARBON STEEL FOR STRUCTURAL STEEL GRATING CONFORMING TO AASHTO DESIGNATION M 270, GRADE 36 (ASTM A 709, GRADE 36)
7. SEE STD DWG GF 3 AND GF 5 FOR GRATING, FRAME AND SOLID COVER DETAILS.
8. SEE ROADWAY PLANS FOR DETAILS OF INSTALLATION, INCLUDING LOCATION OF UNITS, NUMBER OF UNITS REQUIRED, TYPE OF UNITS, SIZE AND LOCATION OF PIPE(S).
9. FOR CURB & GUTTER APPLICATIONS ADJUST FINISH GRADE ELEVATION OF BOX AS REQUIRED. INCLUDE CONCRETE QUANTITIES FOR CURB & GUTTER IN ROADWAY QUANTITIES.

DESIGN DATA

MS 18 (HS-20) OR INTERSTATE ALTERNATE LOADING IN ACCORDANCE WITH CURRENT AASHTO AND INTERIM SPECIFICATIONS.

CAST-IN-PLACE STRUCTURAL CONCRETE: fc = 1,400 psi, n = 8
REINF. STEEL: fc = 24,000 psi
STRUCTURAL STEEL: fs = 20,000 psi

QUANTITIES

STRUCTURAL CONCRETE
REINFORCING STEEL
— SEE SCHEDULE OF INSTALLATION

INDEX OF SHEETS

A- SITUATION & LAYOUT
B- SECTION DETAILS
C- SCHEDULE OF INSTALLATION FOR 18"-42" RCP. 12"-48" CMP.
D- SCHEDULE OF INSTALLATION FOR 48"-66" RCP. 60"-78" CMP.

REVISIONS

NO.	DATE	APPR.	REMARKS

UTAH DEPARTMENT OF TRANSPORTATION
STANDARD DRAWINGS FOR ROAD AND BRIDGE CONSTRUCTION
SALT LAKE CITY, UTAH

RECOMMENDED FOR APPROVAL — JAN.01,2005 DATE
CHAIRMAN STANDARDS COMMITTEE APPROVED — JAN.01,2005 DATE
DEPUTY DIRECTOR

STANDARD CATCH BASIN AND CLEANOUT BOX SITUATUON AND LAYOUT

STANDARD DRAWING TITLE

STD DWG
CB 9A

DGN File:N:\Esa\Standard_Drawings\Imperial\2005Approved\Catch Basins and Cleanouts (CB)\cb09a.dgn
15-DEC-2004