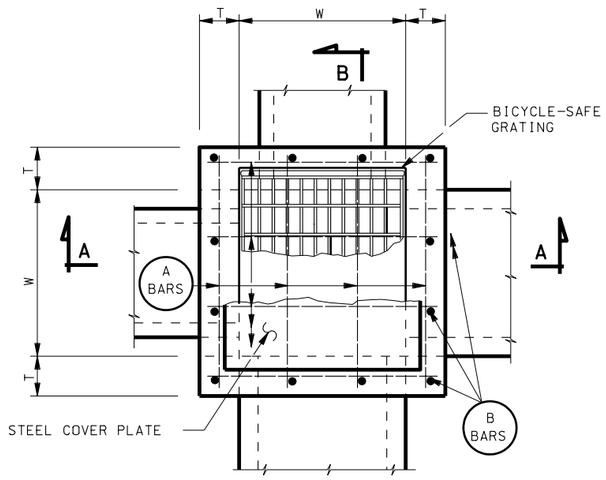

PLAN

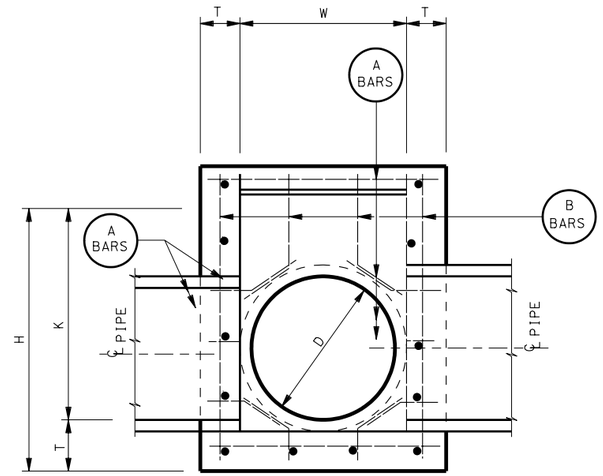

SECTION A-A

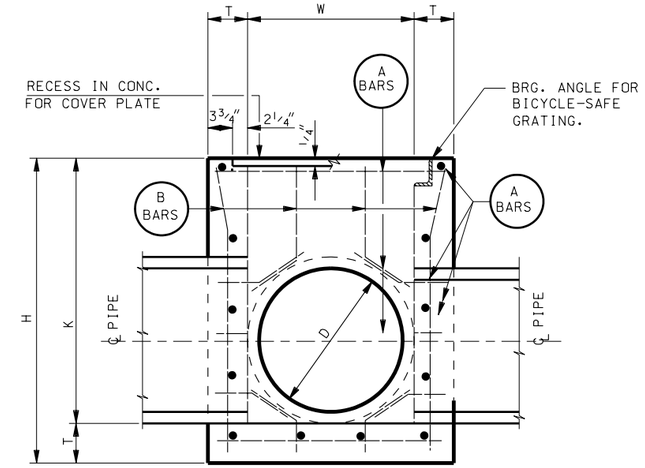

SECTION B-B

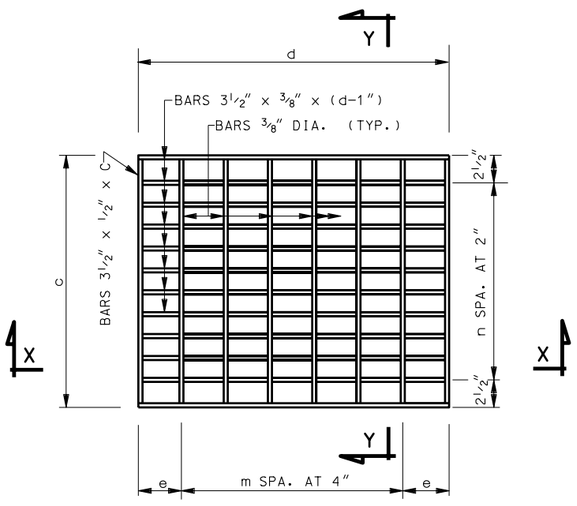

PLAN (GRATING)

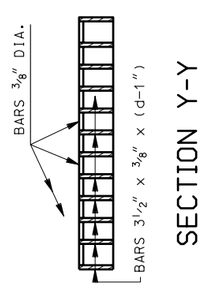

SECTION Y-Y

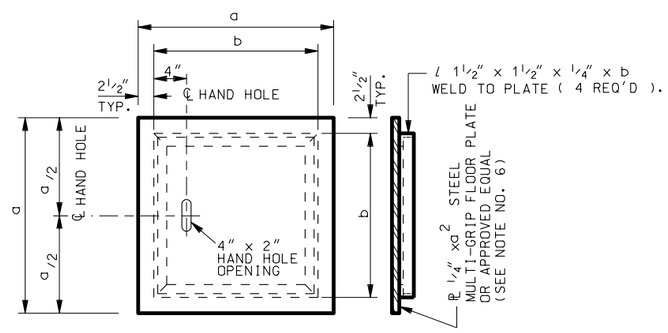

STEEL COVER PLATE DETAILS

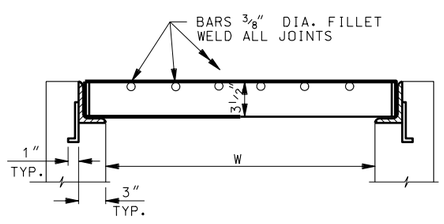

SECTION X-X

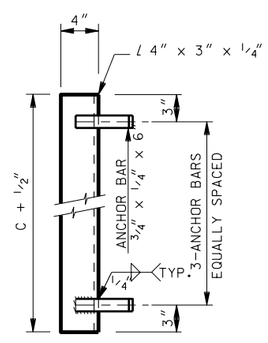

BICYCLE-SAFE GRATING

GENERAL NOTES FOR DB 1A TO DB 3C

1. USE COATED DEFORMED BILLET STEEL BARS CONFORMING TO AASHTO M 284 OR M 111 AND M 31 GRADE 60, RESPECTIVELY.
2. USE STRUCTURAL STEEL CONFORMING TO AASHTO M 270 GRADE 36 EXCEPT WHERE NOTED OTHERWISE.
3. HOT-DIP GALVANIZE THE GRATING AND FRAME AFTER FABRICATION IN ACCORDANCE WITH AASHTO M 111.
4. TYPE II CEMENT (LOW ALKALI), STRUCTURAL CONCRETE REQUIRED.
5. PIPES AND BOX TO BE ARRANGED TO SUIT CONDITIONS. CUT AND BEND BARS WHERE NECESSARY TO CLEAR PIPE. ALL BARS TO BE #5 AT 12" PLUS OR MINUS.
6. COVER PLATE ALTERNATE FOR GRATING. COVER PLATE IS NOT DESIGNED FOR WHEEL LOAD. (SEE STD DWG CB 4 FOR SOLID COVER FOR HS 20-44 LOADING).
7. DEDUCT CONCRETE DISPLACED BY PIPE(S) FROM THOSE CONCRETE QUANTITIES GIVEN IN SCHEDULE NO. 1.

DESIGN DATA

HS 20-44 OR INTERSTATE ALTERNATE LOADING IN ACCORDANCE WITH CURRENT AASHTO AND INTERIM SPECIFICATIONS.

LIVE LOAD: HS 20-44
fc = 1,400 psi
fs = 24,000 psi (REINFORCING STEEL)
fs = 20,000 psi (STRUCTURAL STEEL)
n = 8

DIMENSIONS & QUANTITIES

(SEE SCHEDULES ON STD DWG DB 1D)

NO.	DATE	APPR.	REMARKS

REVISIONS

UTAH DEPARTMENT OF TRANSPORTATION
STANDARD DRAWINGS FOR ROAD AND BRIDGE CONSTRUCTION
SALT LAKE CITY, UTAH

RECOMMENDED FOR APPROVAL — JAN.01,2005 DATE
CHAIRMAN STANDARDS COMMITTEE APPROVED — JAN.01,2005 DATE
DEPUTY DIRECTOR

STANDARD DIVERSION BOX/COVER PLATE/ GRATING FOR 18" DIA. OR 24" DIA.PIPE

STANDARD DRAWING TITLE

STD DWG
DB 1A

DGN File: N:\Esa\Standard_Drawings\Imperial\2005Approved\Diversion Boxes (DB)\db01a.dgn
15-DEC-2004