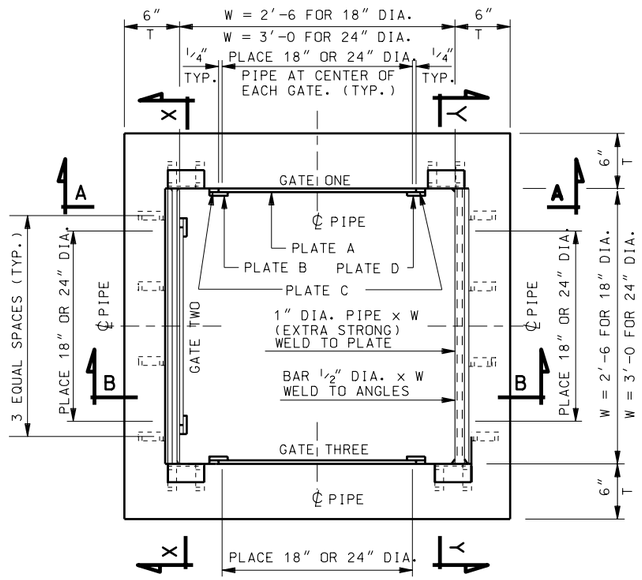


## 3 GATE PLAN

(SECTION X-X Y-Y & B-B ARE ON STD DWG DB 1F)

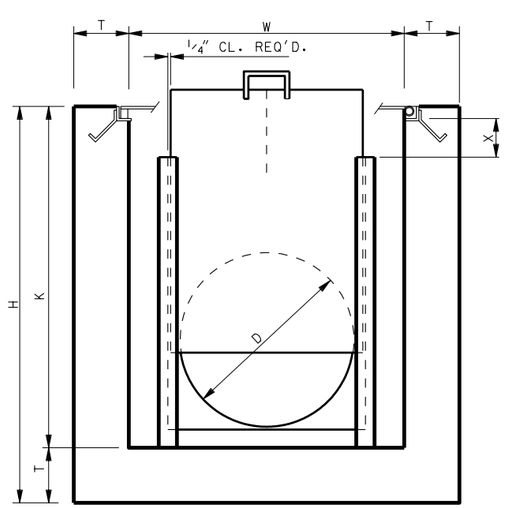


## SECTION A-A

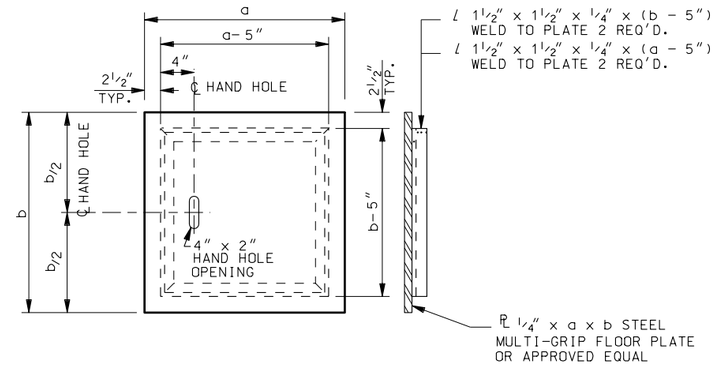


## STEEL COVER PLATE DETAILS

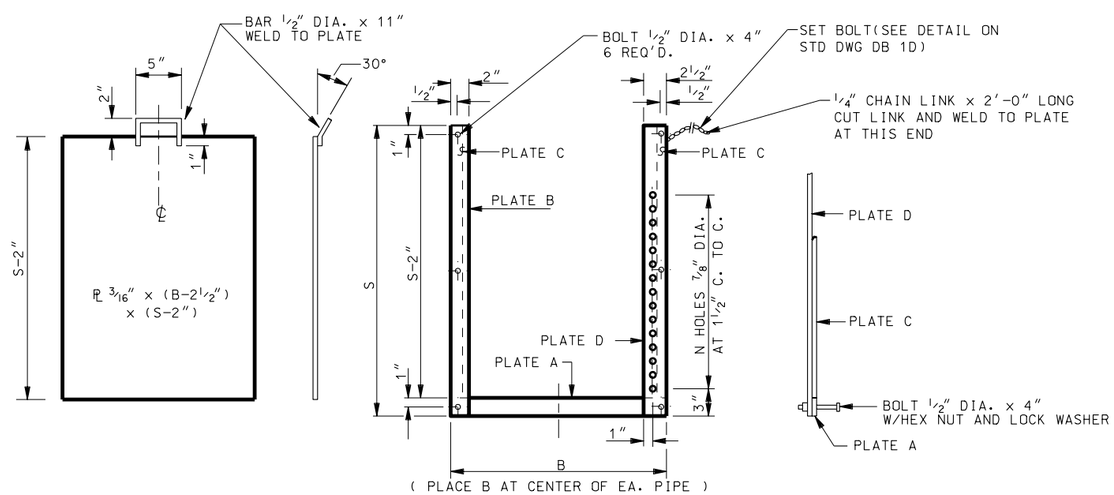


## FRAME AND GATE INSTALLATION DETAIL DIMENSIONS AND QUANTITIES

SEE SCHEDULES ON STD DWG DB 1F

| NO. | DATE | APPR. | REMARKS |
|---|---|---|---|
| | | | |

REVISIONS

UTAH DEPARTMENT OF TRANSPORTATION
STANDARD DRAWINGS FOR ROAD AND BRIDGE CONSTRUCTION
SALT LAKE CITY, UTAH

RECOMMENDED FOR APPROVAL — JAN.01,2005 DATE
CHAIRMAN STANDARDS COMMITTEE APPROVED — JAN.01,2005 DATE
DEPUTY DIRECTOR

STANDARD DIVERSION BOX THREE GATE BOX SECTIONS FOR 18" DIA. OR 24" DIA.PIPE

STANDARD DRAWING TITLE

STD DWG
DB 1E

DGN File:N:\Esd\Standard Drawings\Imperial\2005Approved\Diversion Boxes (DB)\db01e.dgn

15-DEC-2004