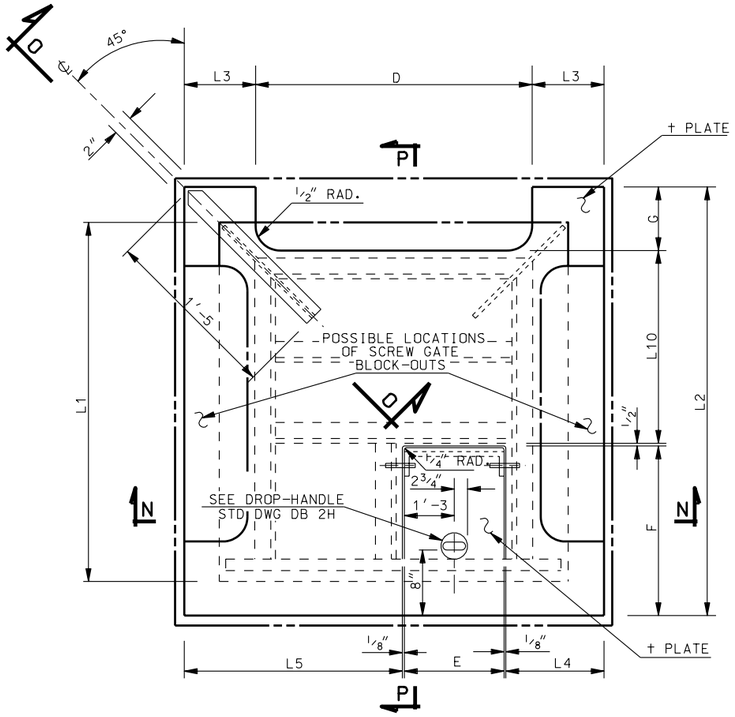

SOLID COVER TYPE ''A'' DETAILS
PLAN

SOLID COVER TYPE "A" SUB-FRAME TYPE "I" DIMENSIONS

LINE NO.	SCREW GATE		WALL SIZE	BLOCK-OUT		HINGED LID			COVER PLATE					SUB-FRAME TYPE I						
	A	B	L1	D	G	E	F	†	L2	†	L3	L4	L5	L6	L7	L8	L9	L10	L11	L12
1	36	36	4'-4	3'-5 1/4	8 1/2"	2'-6	3'-4 5/8	1/4"	5'-3	1/4"	10 7/8"	1'-0	1'-8 3/4	6 1/2"	8"	9 3/4"	9 3/16"	1'-1 3/8	4'-3 1/2	3'-3
2	42	42	4'-10	4'-0 1/2	9 1/2"			1/4"	5'-9	1/4"	10 1/4"	1'-1	2'-1 3/4	7 1/2"	1'-0	1'-2 3/4	10 5/8"	1'-6 3/8	4'-9 1/2	3'-7
3	48	48	5'-6	4'-7 1/2	9 1/2"			1/4"	6'-5	1/4"	10 3/4"	1'-1	2'-9 3/4	7 1/2"	1'-8	1'-10 3/4	10 5/8"	2'-2 3/8	5'-5 1/2	4'-3
4	36	24	4'-4	3'-5 1/4	8 1/2"			1/4"	5'-3	1/4"	10 7/8"	1'-0	1'-8 3/4	6 1/2"	8"	9 3/4"	9 3/16"	1'-1 3/8	4'-3 1/2	3'-3
5	48	30	5'-4	4'-6 1/4	9 1/2"			1/4"	6'-3	1/4"	10 3/8"	1'-1	2'-7 3/4	7 1/2"	1'-6	1'-8 3/4	10 5/8"	2'-0 3/8	5'-3 1/2	4'-1
6	60	36	6'-6	5'-7 1/4	9 1/2"			3/8"	7'-5	3/8"	10 7/8"	1'-1	3'-9 3/4	7 1/2"	2'-8	2'-10 3/4	10 5/8"	3'-2 3/8	6'-5 1/2	5'-3
7	72	42	7'-6	6'-7 1/4	9 1/2"			3/8"	8'-5	3/8"	10 7/8"	1'-1	4'-9 3/4	7 1/2"	3'-8	3'-10 3/4	10 5/8"	4'-2 3/8	7'-5 1/2	6'-3
8	72	48	7'-6	6'-7 1/4	9 1/2"	2'-6	3'-4 5/8	3/8"	8'-5	3/8"	10 7/8"	1'-1	4'-9 3/4	7 1/2"	3'-8	3'-10 3/4	10 5/8"	4'-2 3/8	7'-5 1/2	6'-3

NOTE:
DRILL 2- 1 1/16" DIA. HOLES IN BOTH SUB-FRAME AND HINGED LID.

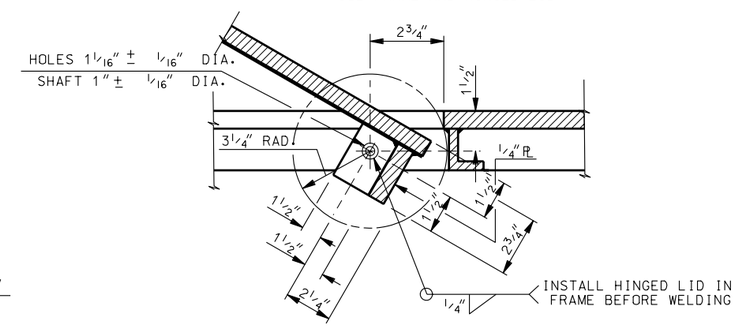

ENLARGEMENT X

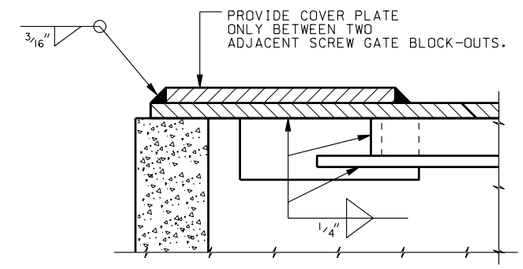

SECTION O-O

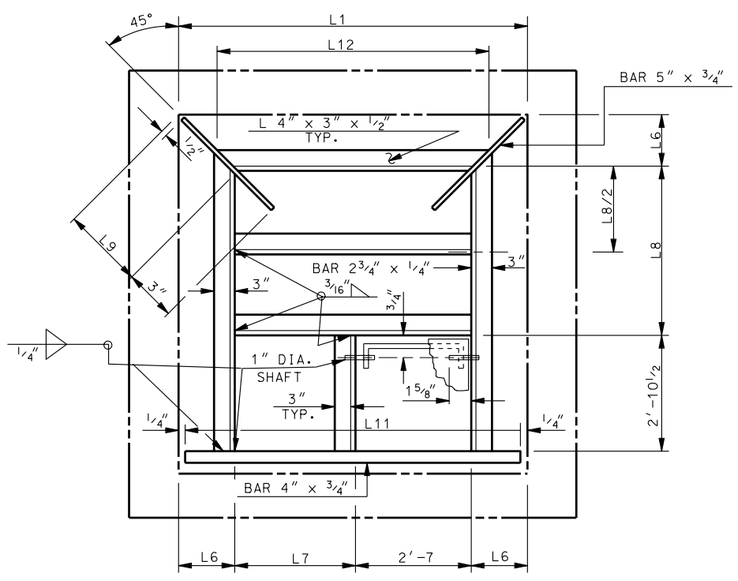

SOLID COVER TYPE ''A'' DETAILS
SUB-FRAME TYPE ''I'' PLAN

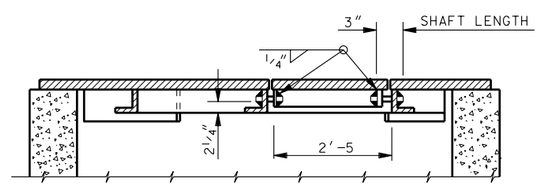

SECTION N-N

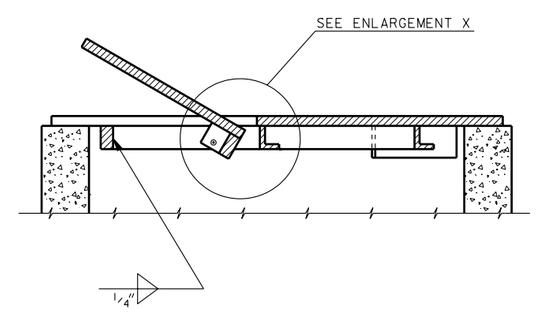

SECTION P-P

NO.	DATE	APPR.	REMARKS

REVISIONS

UTAH DEPARTMENT OF TRANSPORTATION
STANDARD DRAWINGS FOR ROAD AND BRIDGE CONSTRUCTION
SALT LAKE CITY, UTAH

RECOMMENDED FOR APPROVAL — JAN.01.2005 DATE
CHAIRMAN STANDARDS COMMITTEE APPROVED — JAN.01.2005 DATE
DEPUTY DIRECTOR

STANDARD DIVERSION BOX
HINGED LID
(SOLID COVER PLATE)
TYPE"A" DETAILS
TYPE I PLAN

STANDARD DRAWING TITLE

STD DWG
DB 2E

DGN File: N:\Esd\Standard_Drawings\Imperial\2005Approved\Diversion Boxes (DB)\db02e.dgn
15-DEC-2004