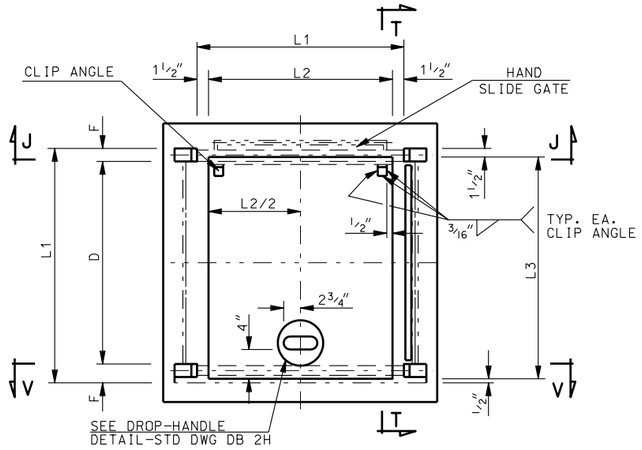

PLAN

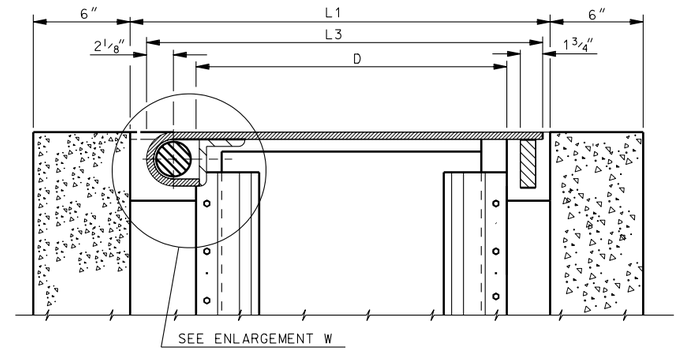

SECTION T-T

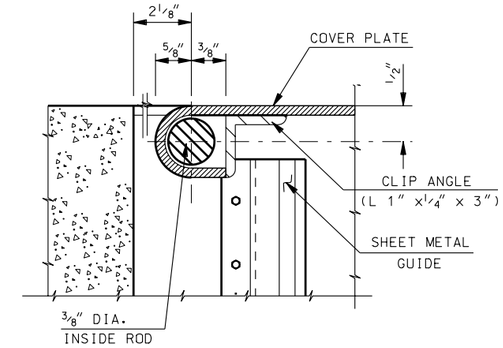

ENLARGEMENT W

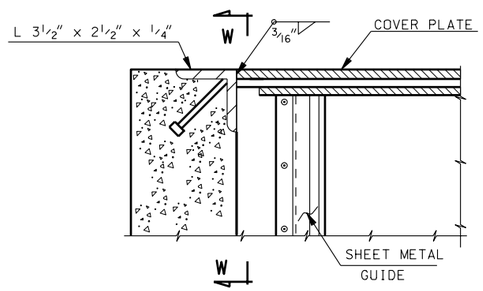

SECTION J-J

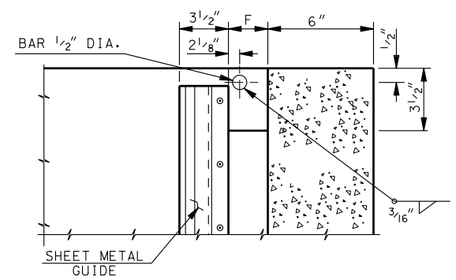

SECTION W-W

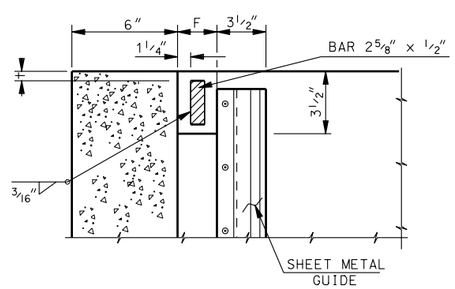

SECTION X-X

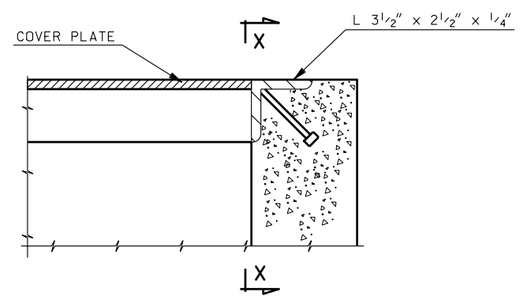

SECTION V-V

SOLID COVER TYPE ''B'' DETAILS

NOTES:

1. PREFORMED JOINT MATERIAL: AASHTO DESIGNATION M 213
2. ALL STRUCTURAL STEEL EITHER STRUCTURAL CARBON STEEL CONFORMING TO AASHTO DESIGNATION M 270, GRADE 36 OR A RAISED PATTERN CARBON STEEL (U.S. STEEL S 300) OR USED IN SIDEWALK LOCATIONS ONLY.
3. HOT DIP GALVANIZE HINGED LID SOLID COVERS AFTER FABRICATION IN ACCORDANCE WITH AASHTO DESIGNATION M 111 (ASTM A 123).
4. WHEN HINGED LID IS PLACED IN SIDEWALK LOCATIONS,PROVIDE A RUBBED FINISH FOR ALL BEARING SURFACES AT TOP OF WALL, AT THE DISCRETION OF THE ENGINEER, RECESS THE COVER PLATE THE THICKNESS OF THE COVER PLATE AND USE A CEMENT GROUT ON ALL BEARING SURFACES TO LEVEL THE HINGED LID.
5. DO NOT USE THIS DRAWING IN ROADWAY APPLICATIONS WHERE THE HINGED LID IS SUBJECTED TO A WHEEL LOAD.
6. AUTOMATICALLY END WELD THE 1/2" x 4 1/8" H4-L NELSON CONCRETE ANCHOR TO THE FILLET OF THE ANGLE. CENTER ANCHOR ABOUT FILLET.

DESIGN DATA

THE DESIGN IS IN ACCORDANCE WITH CURRENT AASHTO AND INTERIM SPECIFICATIONS.
LOADING - COVER PLATES ARE DESIGNED FOR A LOAD OF 600 lbs/sq ft
Fs=20,000 psi

SOLID COVER TYPE ''B'' DIMENSIONS

LINE NO.	HAND SLIDE GATE		WALL SIZE	COVER PLATE				
	A	B	L1	D	F	L2	L3	t
1	12	12	2'-0	1'-4 1/4	3"	1'-9	1'-10	1/4"
2	18	18	2'-6	1'-10 1/4	3"	2'-3	2'-4	1/4"
3	24	24	3'-0	2'-4 1/4	3"	2'-9	2'-10	1/4"
4	36	24	4'-4	3'-5 1/4	5"	4'-1	4'-2	1/4"

REVISIONS

NO.	DATE	APPR.	REMARKS

UTAH DEPARTMENT OF TRANSPORTATION
STANDARD DRAWINGS FOR ROAD AND BRIDGE CONSTRUCTION
SALT LAKE CITY, UTAH

RECOMMENDED FOR APPROVAL — JAN.01.2005 DATE
CHAIRMAN STANDARDS COMMITTEE APPROVED — JAN.01.2005 DATE
DEPUTY DIRECTOR

STANDARD DIVERSION BOX
HINGED LID SOLID COVER
TYPE "B" DETAILS

STANDARD DRAWING TITLE

STD DWG
DB 2G

DGN File: N:\Esd\Standard_Drawings\Imperial\2005Approved\Diversion Boxes (DB)\db02g.dgn
15-DEC-2004