SCHEDULE OF INSTALLATION

LINE	DIMENSIONS H	W	T	A	MAX. PIPE DIA. RCP	MAX. PIPE DIA. CMP	REINFORCING STEEL S1 a	S1 b	S1 L'GTH	S1 QT	W1 L'GTH	W1 QT	W2 N	W2 L'GTH	W2 QT	P1 L'GTH	P1 QT	MAN STEP QT	QUANTITIES CONC. CU. YDS.	REINF. STEEL LBS.	FRAME COVER LBS.	LINE
1	4'-0	5'-0	8"	10"	15"	18"	18"	4'-0	7'-0	12	3'-0	20	2	4'-8	20	3'-6	4	2	2.255	262.1	245	1
2	4'-4	5'-0	↑	6"	18"	21"	↑	4'-0	7'-0	↑	3'-4	↑	3	4'-8	24	↑	↑	2	2.397	288.6	↑	2
3	4'-8	5'-0		8"	24"	24"		4'-0	7'-0		3'-8		3	4'-8	24			2	2.540	295.5		3
4	5'-0	6'-0		10"	24"	30"		5'-0	8'-0		4'-0		3	5'-8	24			3	3.588	340.0		4
5	5'-4	↑		6"	27"	36"		↑	↑		4'-4		4	↑	28			3	3.764	370.6		5
6	5'-8			8"	30"	36"					4'-8		4		28			3	3.939	377.6		6
7	6'-0			10"	36"	42"					5'-0		4		28			4	4.115	384.5		7
8	6'-4			6"	36"	48"					5'-4		5		32			4	4.290	415.1		8
9	6'-8			8"	42"	48"					5'-8		5		32			4	4.466	422.1		9
10	7'-0			10"	↑	54"					6'-0		5		32			5	4.641	429.0		10
11	7'-4			6"		↑					6'-4		6		36			5	4.817	459.6		11
12	7'-8			8"							6'-8		6		36			5	4.993	466.6		12
13	8'-0			10"							7'-0		6		36			6	5.168	473.5		13
14	8'-4			6"							7'-4		7		40			6	5.344	504.1		14
15	8'-8			8"							7'-8		7		40			6	5.519	511.1		15
16	9'-0			10"							8'-0		7		40			7	5.695	518.0		16
17	9'-4			6"							8'-4		8		44			7	5.871	548.6		17
18	9'-8			8"							8'-8		8		44			7	6.046	555.6		18
19	10'-0			10"							9'-0		8		44			8	6.223	562.5		19
20	10'-4			6"							9'-4		9		48			8	6.397	593.1		20
21	10'-8			8"							9'-8		9		48			8	6.573	600.1		21
22	11'-0			10"							10'-0		9		48			9	6.748	607.0		22
23	11'-4			6"							10'-4		10		52			9	6.924	637.6		23
24	11'-8			8"							10'-8		10		52			9	7.100	644.6		24
25	12'-0			10"							11'-0		10		52			10	7.275	651.5		25
26	12'-4			6"							11'-4		11		56			10	7.451	682.1		26
27	12'-8			8"							11'-8		11		56			10	7.626	689.1		27
28	13'-0			10"							12'-0		11		56			11	7.802	696.0		28
29	13'-4			6"							12'-4		12		60			11	7.978	726.6		29
30	13'-8			8"							12'-8		12		60			11	8.153	733.6		30
31	14'-0			10"							13'-0		12		60			12	8.329	740.5		31
32	14'-4			6"							13'-4		13		64			12	8.504	771.1		32
33	14'-8			8"							13'-8		13		64			12	8.680	778.1		33
34	15'-0			10"							14'-0		13		64			13	8.855	785.0		34
35	15'-4			6"							14'-4		14		68			13	9.031	815.6		35
36	15'-8			8"							14'-8		14		68			13	9.206	822.6		36
37	16'-0			10"							15'-0		14		68			14	9.382	829.5		37
38	16'-4			6"							15'-4		15		72			14	9.558	860.1		38
39	16'-8			8"							15'-8		15		72			14	9.733	867.1		39
40	17'-0			10"							16'-0		15		72			15	9.909	874.0		40
41	17'-4			6"							16'-4		16		76			15	10.084	904.6		41
42	17'-8			8"							16'-8		16		76			15	10.260	911.6		42
43	18'-0			10"							17'-0		16		76			16	10.436	918.5		43
44	18'-4			6"							17'-4		17		80			16	10.611	949.1		44
45	18'-8			8"							17'-8		17		80			16	10.787	956.1		45
46	19'-0			10"							18'-0		17		80			17	10.962	963.0		46
47	19'-4			6"							18-4		18		84			17	11.138	993.6		47
48	19'-8			8"							18-8		18		84			17	11.314	1000.6		48
49	20'-0			10"							19'-0		18		84			18	11.489	1007.5		49
50	20'-4			6"							19'-4		19		88			18	11.665	1038.1		2*
51	20'-8			8"							19'-8		19		88			18	11.840	1045.1		51
52	21'-0			10"							20'-0		19		88			19	12.016	1052.0		52
53	21'-4			6"							20'-4		20		92			19	12.192	1082.6		53
54	21'-8			8"							20'-8		20		92			19	12.367	1089.6		54
55	22'-0			10"							21'-0		20		92			20	12.543	1096.5		55
56	22'-4			6"							21'-4		21		96			20	12.718	1127.1		56
57	22'-8			8"							21'-8		21		96			20	12.894	1134.1		57
58	23'-0			10"							22'-0		21		96			21	13.069	1141.0		58
59	23'-4			6"							22'-4		22		100			21	13.245	1171.6		59
60	23'-8			8"							22'-8		22		100			21	13.421	1178.6		60
61	24'-0			10"							23'-0		22		100			22	13.596	1185.5		61
62	24'-4			6"							23'-4		23		104			22	13.772	1216.1		62
63	24'-8			8"							23'-8		23		104			22	13.947	1223.1		63
64	25'-0	6'-0	8"	10"	42"	54"	18"	5'-0	8'-0	12	24'-0	20	23	5'-8	104	3'-6	4	23	14.123	1230.0	245	64

TABLE "A"			
RCP		CMP	
DIA.	CU. YDS.	DIA.	CU. YDS.
12"	0.037	12"	0.019
15"	0.053	15"	0.030
18"	0.071	18"	0.044
21"	0.095	21"	0.059
24"	0.121	24"	0.078
27"	0.151	30"	0.121
30"	0.184	36"	0.175
33"	0.221	42"	0.238
36"	0.261	48"	0.310
42"	0.350	54"	0.393

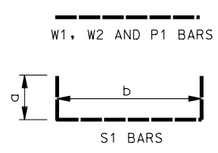

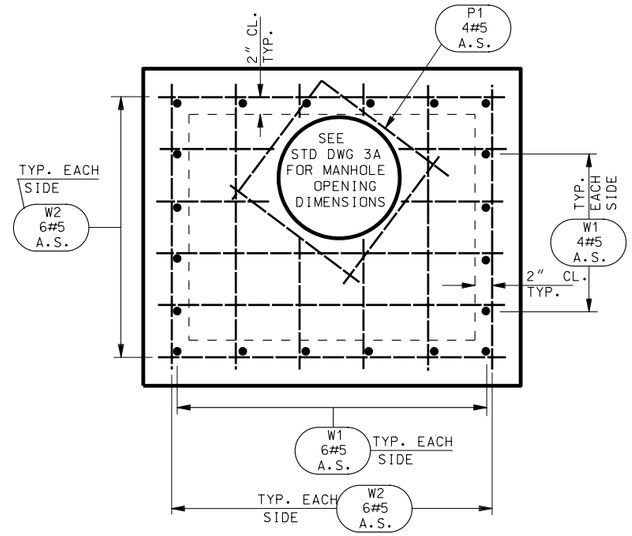

PLAN OF TOP SLAB

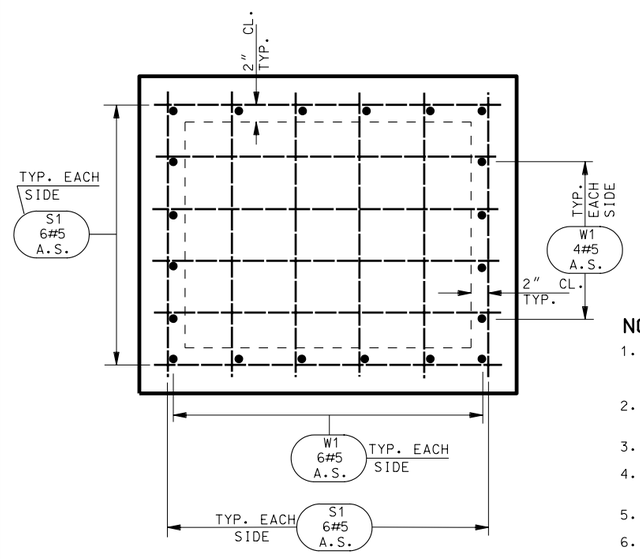

PLAN OF BOTTOM SLAB

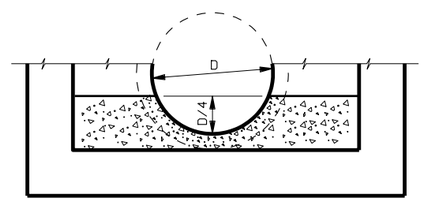

FORMED INVERT DETAIL

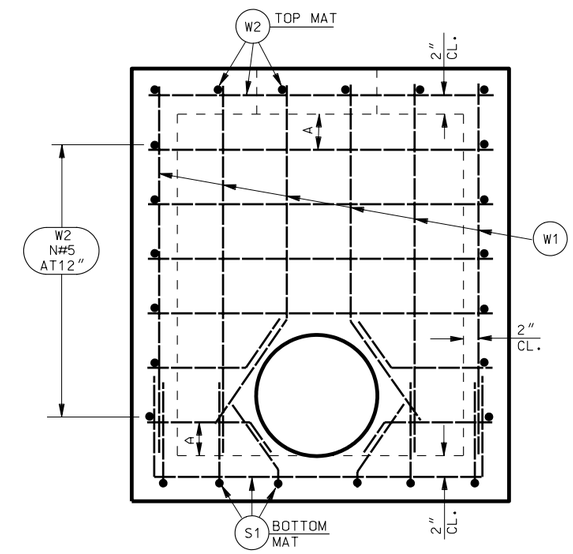

TYPICAL WALL ELEVATION

NOTES:

1. DEDUCT CONCRETE DISPLACED BY PIPE(S) FROM CONCRETE QUANTITIES SHOWN IN SCHEDULE OF INSTALLATION IN ACCORDANCE WITH TABLE "A."
2. FORM THE BOTTOM SLAB OF THE BOX TO FIT THE INVERT OF THE PIPE(S) WHEN SO REQUIRED ACCORDING TO THE DETAIL SHOWN ON THIS SHEET (FORMED INVERT).
3. QUANTITIES SHOWN IN THE SCHEDULE OF INSTALLATION ARE FOR ONE UNIT ONLY.
4. FIELD CUT OR BEND REINFORCING STEEL AS NECESSARY TO CLEAR PIPE(S) AND MAINTAIN 2" MINIMUM CLEARANCE.
5. UNLESS OTHERWISE SHOWN ALL DIMENSIONS ARE OUT-TO-OUT OF BARS.
6. WEIGHT QUANTITIES FOR MANHOLE FRAME AND COVER ARE SHOWN FOR INFORMATION ONLY.
7. SEE STD DWG DB 3A FOR DIMENSIONS. SEE STD DWG GF 6 FOR MANHOLE STEP DETAILS.
8. PIPE DIAMETERS SHOWN IN TABLES AND SCHEDULES ARE INSIDE DIAMETERS.
9. ADD AN ADDITIONAL AMOUNT OF CONCRETE TO QUANTITIES SHOWN IN THE SCHEDULE OF INSTALLATION WHEN FORMED INVERT IS REQUIRED.
10. MAXIMUM PIPE DIMENSIONS SHOWN IN SCHEDULE OF INSTALLATION ARE FOR PIPES PERPENDICULAR TO WALLS OF BOX. DETERMINE CLEARANCES FOR SKEWED PIPES.

NO.	DATE	APPR.	REVISIONS	REMARKS

UTAH DEPARTMENT OF TRANSPORTATION
STANDARD DRAWINGS FOR ROAD AND BRIDGE CONSTRUCTION
SALT LAKE CITY, UTAH

RECOMMENDED FOR APPROVAL — JAN.01.2005 DATE
CHAIRMAN STANDARDS COMMITTEE
APPROVED — JAN.01.2005 DATE
DEPUTY DIRECTOR

STANDARD DIVERSION BOX WITH MANHOLE COVER UP TO 42" RCP AND UP TO 54" CMP

STANDARD DRAWING TITLE

STD DWG
DB 3B

DGN File: N:\Esa\Standard.Drawings\Imperial\2005Approved\Diversion Boxes (DB)\db03b.dgn
15-DEC-2004