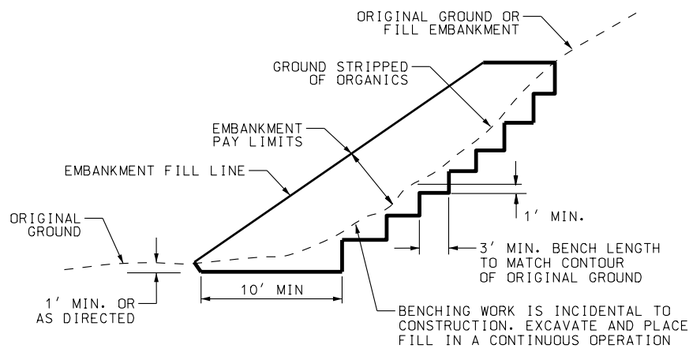

BENCHED SLOPE DETAIL

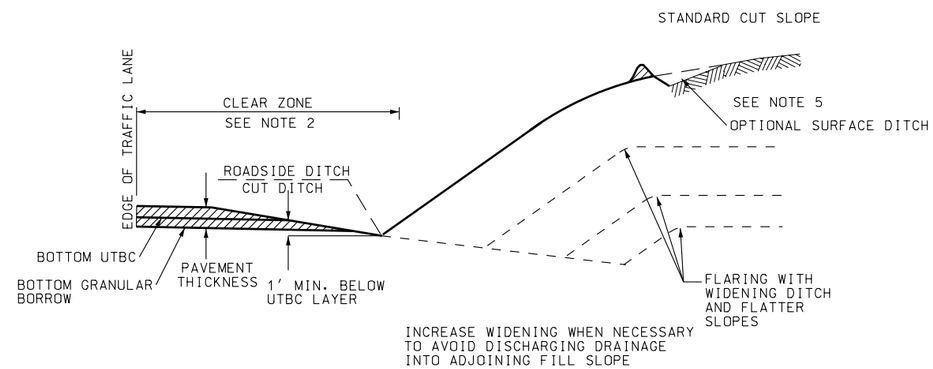

CUT DITCH FLARING DETAIL

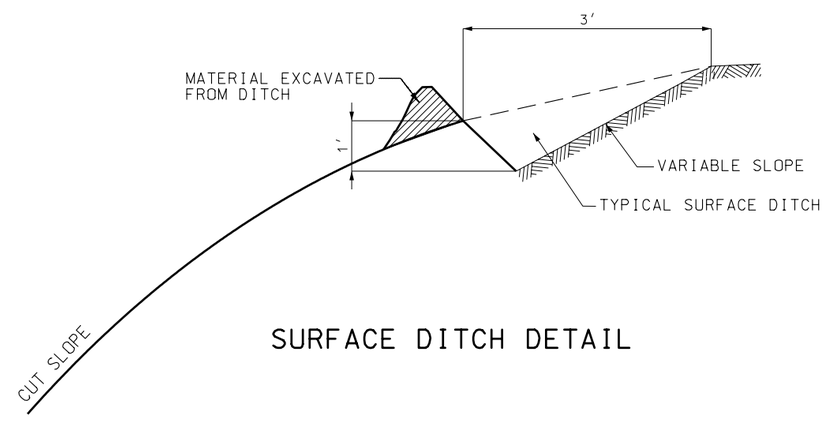

SURFACE DITCH DETAIL

NOTES:

1. USE THE CURRENT EDITION OF AASHTO A POLICY ON GEOMETRIC DESIGN OF HIGHWAYS AND STREETS FOR DESIGN OF ROADWAY ELEMENTS.
2. USE THE CURRENT EDITION OF AASHTO ROADSIDE DESIGN GUIDE FOR CLEAR ZONE REQUIREMENTS. CLEAR ZONE MAY EXTEND INTO CUT OR FILL SLOPES.
3. STANDARDS SHOWN ARE RECOMMENDED VALUES. EXCEED STANDARDS IF CONDITIONS PERMIT.
4. TRANSITION FROM FLAT TO STEEPER CUT AND FILL SLOPES IN SUFFICIENT DISTANCE TO PROVIDE A NATURAL PLEASING APPEARANCE.
5. INSTALL SURFACE DITCH (OPTIONAL) WHEN SHEET FLOW DRAINAGE IS TOWARDS CUT SLOPE. DRAIN SURFACE DITCH TO NATURAL DRAINAGE OR ROADSIDE DITCH. PROVIDE OTHER MEASURES TO PREVENT ERODING CUT SLOPES IF SURFACE DITCH IS OMITTED.
6. PAVEMENT THICKNESS CONSISTS OF HARD SURFACING, UTBC AND GRANULAR BORROW (IF USED).

NO.	DATE	APPR.	REMARKS

REVISIONS

UTAH DEPARTMENT OF TRANSPORTATION
STANDARD DRAWINGS FOR ROAD AND BRIDGE CONSTRUCTION
SALT LAKE CITY, UTAH

RECOMMENDED FOR APPROVAL — JAN.01,2005 DATE
CHAIRMAN STANDARDS COMMITTEE
APPROVED — JAN.01,2005 DATE
DEPUTY DIRECTOR

SURFACE DITCH,
BENCHED SLOPE, AND
CUT DITCH DETAILS

STANDARD DRAWING TITLE

STD DWG
DD 2

DGN File:N:\Est\Standard Drawings\Imperial\2005Approved\Design (DD)\dd02.dgn
15-DEC-2004