NOTES:

1. ON BOTH SIDES OF CHANNEL INSTALL BEARING PIPES, CONCRETE BLOCKS AND TURN BUCKLES.
2. INSTALLED WIRE ROPE ON THE UPSTREAM SIDE OF THE POSTS. USE 1/2" DIA. WIRE 6"x 12" WITH BREAKING STRENGTH OF 10,000 lbs.

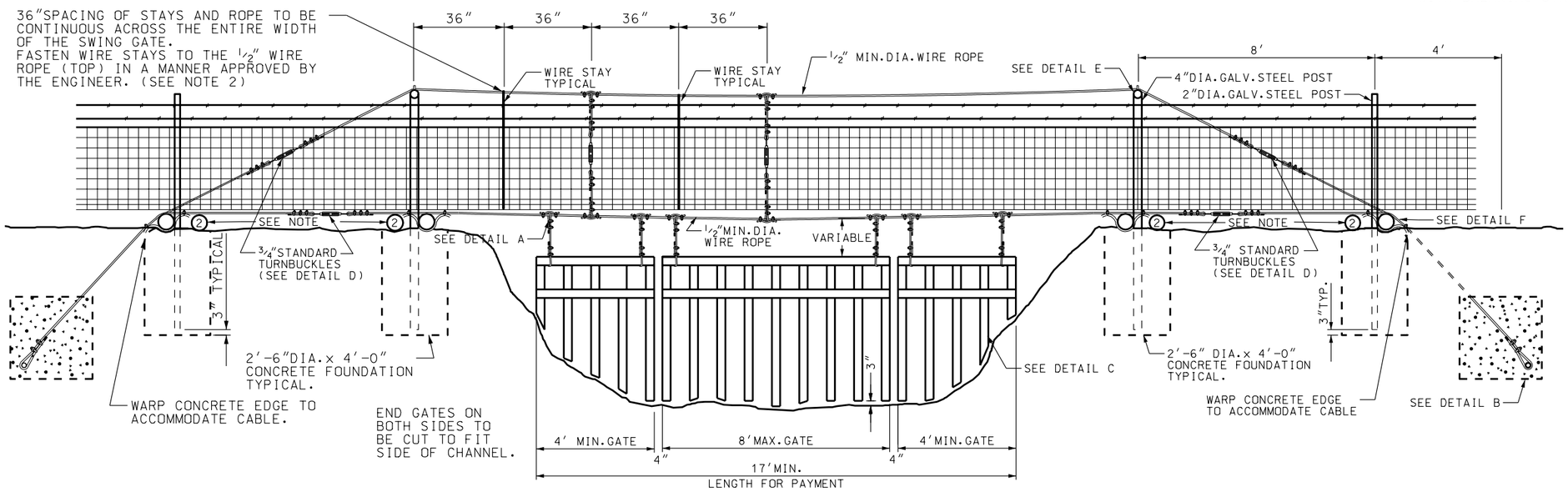

INSTALLATION DETAIL

DETAIL G

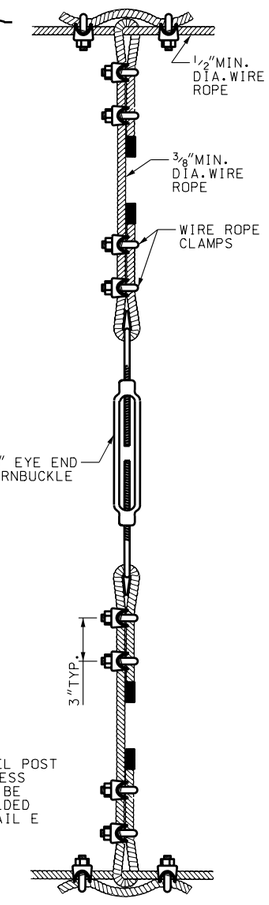

DETAIL B

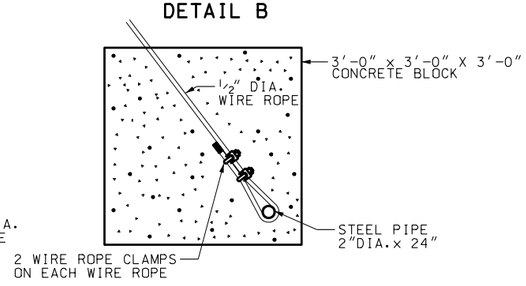

DETAIL A

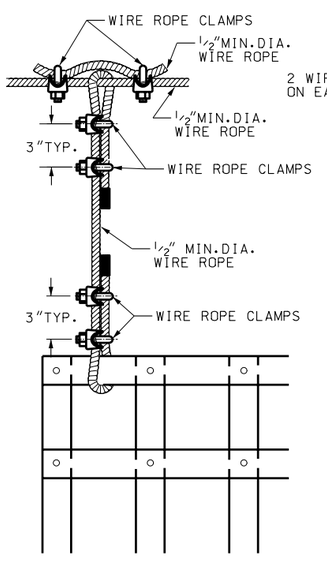

DETAIL D

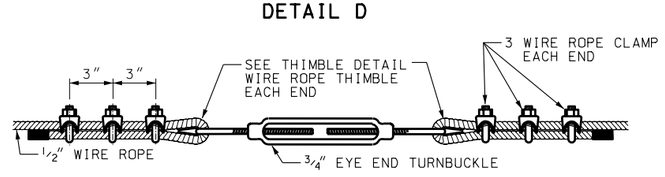

DETAIL F

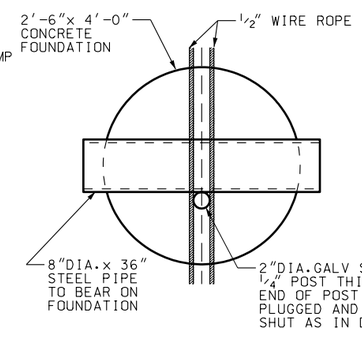

DETAIL C

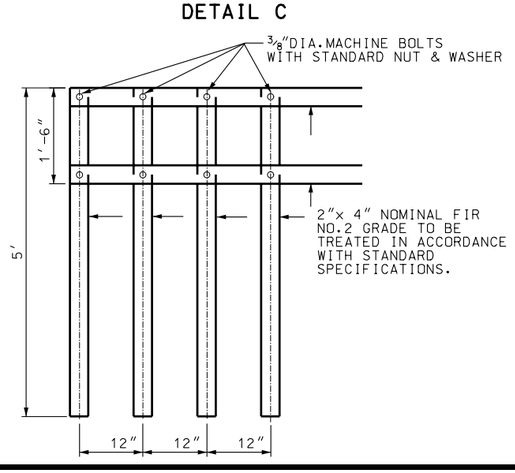

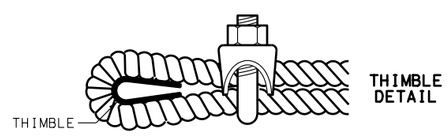

DETAIL E

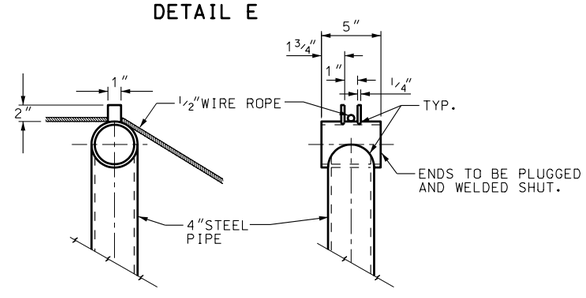

NO.	DATE	APPR.	REMARKS

REVISIONS

UTAH DEPARTMENT OF TRANSPORTATION
STANDARD DRAWINGS FOR ROAD AND BRIDGE CONSTRUCTION
SALT LAKE CITY, UTAH

RECOMMENDED FOR APPROVAL — JAN.01,2005 DATE
CHAIRMAN STANDARDS COMMITTEE
APPROVED — JAN.01,2005 DATE
DEPUTY DIRECTOR

SWING GATES TYPE II
FOR GATES
WIDER THAN 17'

STANDARD DRAWING TITLE

STD DWG
FG 5

DGN File:N:\Esa\Standard_Drawings\Imperial\2005Approved\Fence and Gates (FG)\fg05.dgn
15-DEC-2004