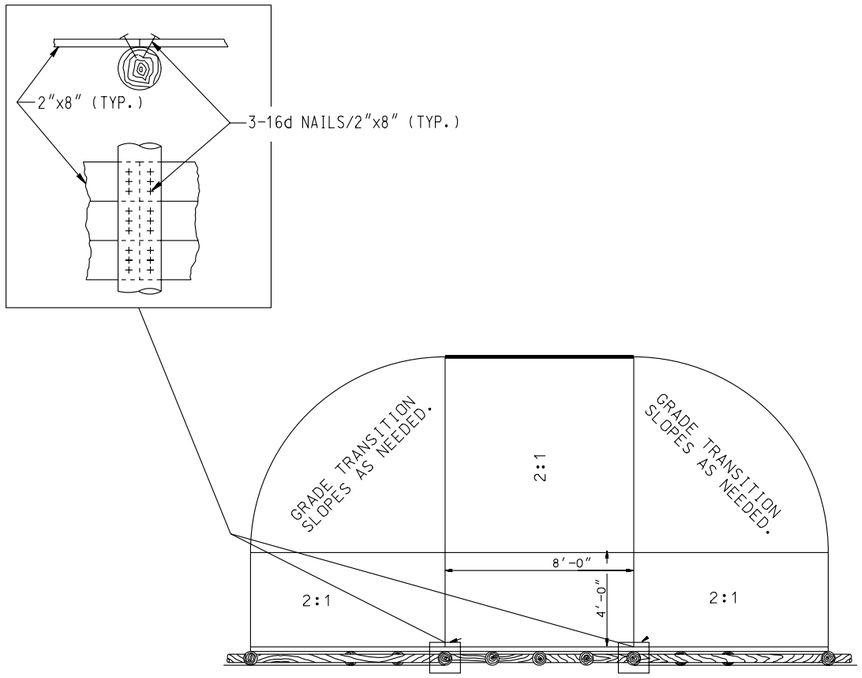


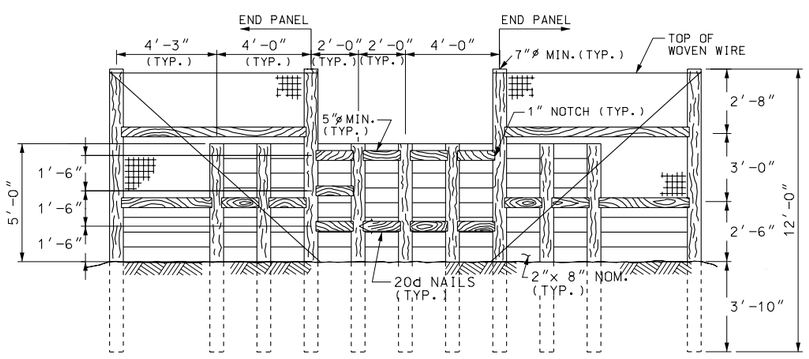


## DEER RAMP DETAIL

NOTE: USE 2" x 8" TIMBER FOR ALL HORIZONTAL AND LONGITUDINAL LAGGING.

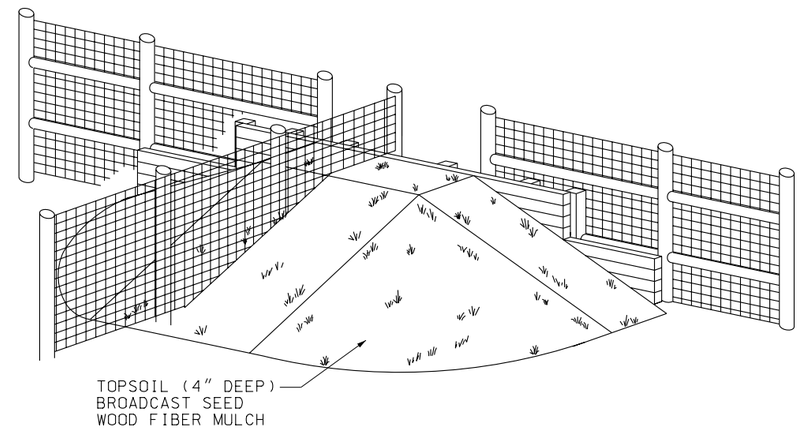


## ISOMETRIC VIEW

NOTE: THE HIGH MIGRATORY DEER CROSSING DOES NOT USE DRIFT FENCE DOWN CENTER OF THE DEER RAMPS.

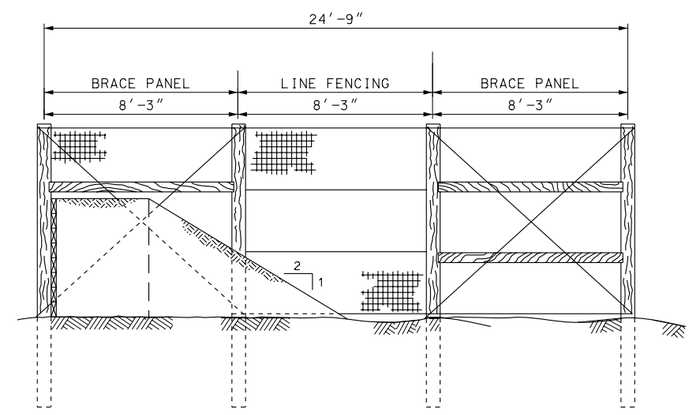


## DRIFT FENCE DETAIL

REVISIONS

| NO. | DATE | APPR. | REMARKS |
|---|---|---|---|
| 1 | 04/28/05 | MAP | NEW DRAWING. |

UTAH DEPARTMENT OF TRANSPORTATION
STANDARD DRAWINGS FOR ROAD AND BRIDGE CONSTRUCTION
SALT LAKE CITY, UTAH

RECOMMENDED FOR APPROVAL — APR.28.2005 DATE
CHAIRMAN STANDARDS COMMITTEE APPROVED — APR.28.2005 DATE
DEPUTY DIRECTOR

DEER RAMP DETAILS

STANDARD DRAWING TITLE

STD DWG
FG 4B

DGN File:L:\Standard Drawings\Imperial\2005\Approved\x\Change2\Approved\fg4B.dgn
10-MAY-2005