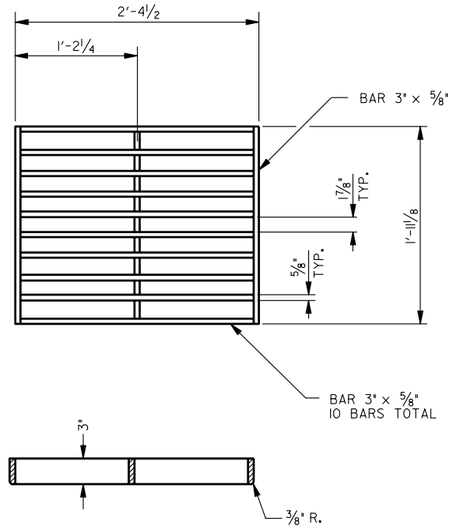

STANDARD GRATE

GRATE WEIGHT = 179 LBS.

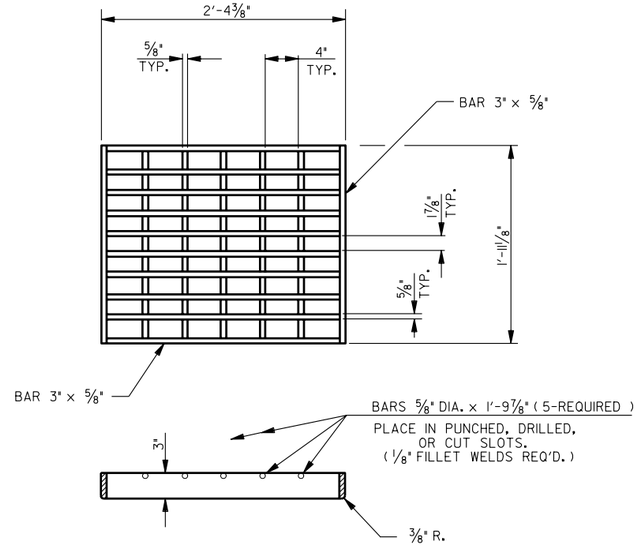

BICYCLE-SAFE GRATE

GRATE WEIGHT = 179 LBS.

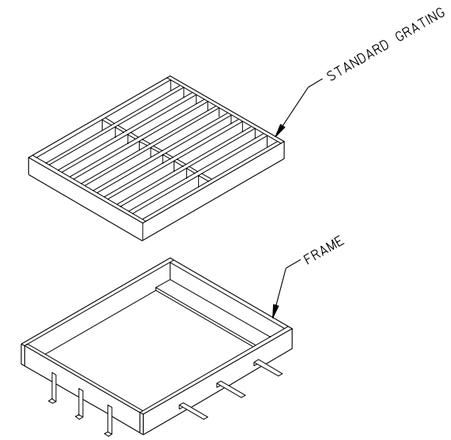

NOTES:

1. HOT-DIP GALVANIZE THE GRATING AND FRAME AFTER FABRICATION IN ACCORDANCE WITH AASHTO DESIGNATION M 111.
2. USE STRUCTURAL CARBON STEEL CONFORMING TO AASHTO DESIGNATION M 270 GRADE 36 FOR STRUCTURAL STEEL GRATING.
3. SEE ROADWAY PLANS FOR LOCATION AND NUMBER OF GRATES REQUIRED.
4. WELD ALL JOINTS WITH A ¼" FILLET WELD UNLESS NOTED OTHERWISE.

DESIGN DATA

GRATE AND FRAME: MEET HS-20 OR INTERSTATE ALTERNATE LOADING IN ACCORDANCE WITH AASHTO SPECIFICATIONS WHICH ARE IN EFFECT AT DATE OF REQUEST FOR BIDS.

STRUCTURAL STEEL: Fs=20,000psi

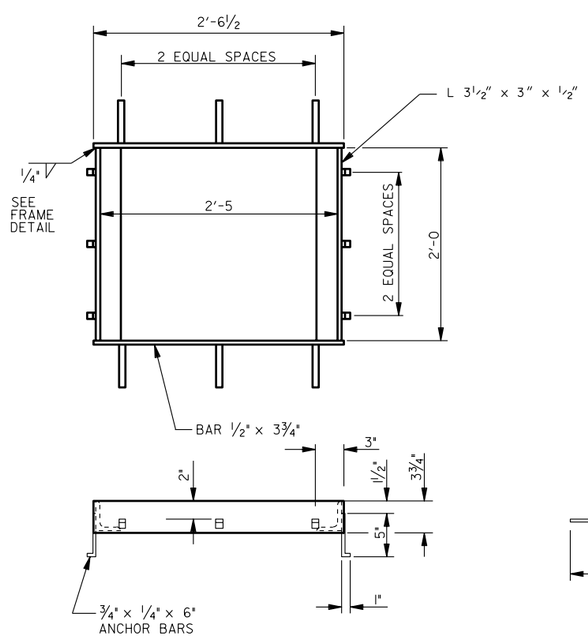

FRAME

FRAME WEIGHT = 77 LBS

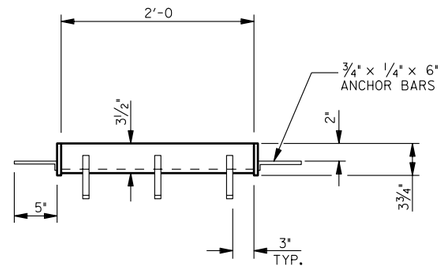

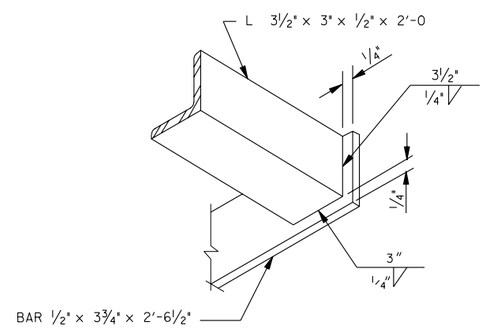

FRAME DETAIL

NO.	DATE	APPR.	REMARKS

REVISIONS

UTAH DEPARTMENT OF TRANSPORTATION
STANDARD DRAWINGS FOR ROAD AND BRIDGE CONSTRUCTION
SALT LAKE CITY, UTAH

RECOMMENDED FOR APPROVAL — JAN.01,2005 DATE
CHAIRMAN STANDARDS COMMITTEE APPROVED — JAN.01,2005 DATE
DEPUTY DIRECTOR

2' x 2'
GRATE AND FRAME

STANDARD DRAWING TITLE

STD DWG
GF 8

DGN File:N:\Esa\Standard.Drawings\Imperial\2005\Approved\Grates Frames and Trash Racks (GF)\gf08.dgn

15-DEC-2004