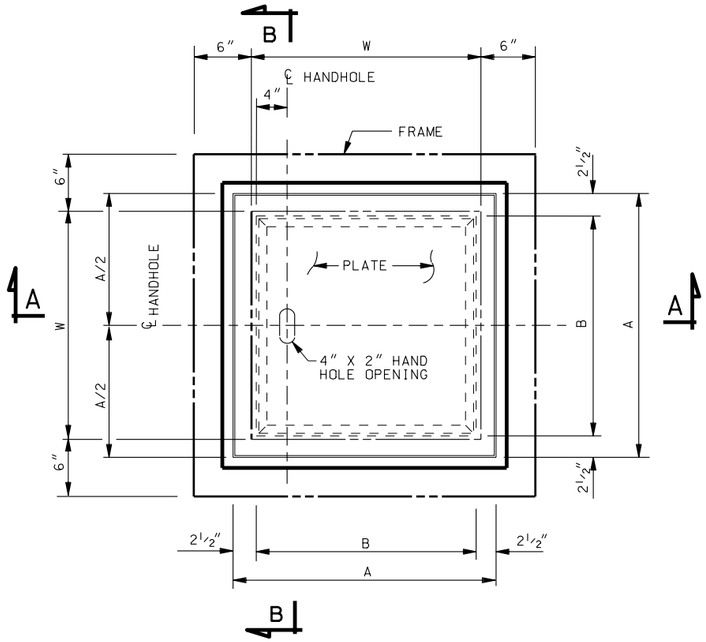

PLAN

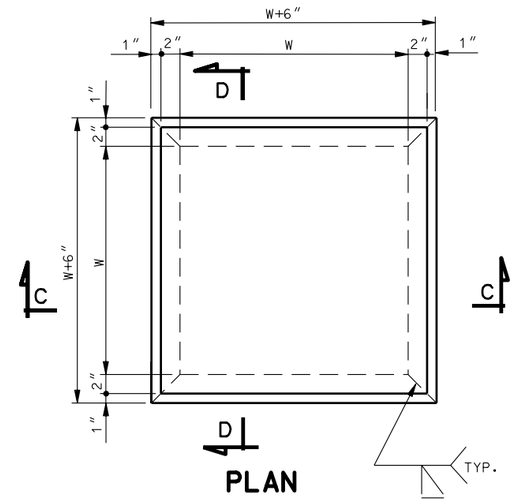

PLAN

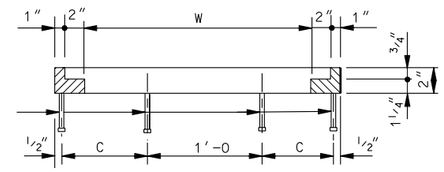

SECTION C-C
SECTION D-D SIMILAR

FRAME DETAILS

NOTE:

ALL STRUCTURAL STEEL: STRUCTURAL CARBON STEEL CONFORMING TO AASHTO DESIGNATION M 270, GRADE 36. AND HOT DIP GALVANIZE AFTER FABRICATION IN ACCORDANCE WITH ASTM A 123.

DESIGN DATA

THE DESIGN IS IN ACCORDANCE WITH AASHTO AND INTERIM SPECIFICATIONS:
Fs = 20,000 psi
LIVE LOAD - HS 20-44

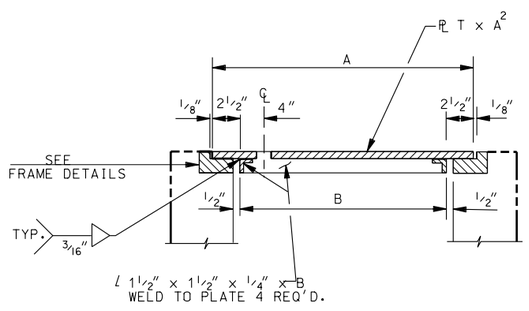

SECTION A-A

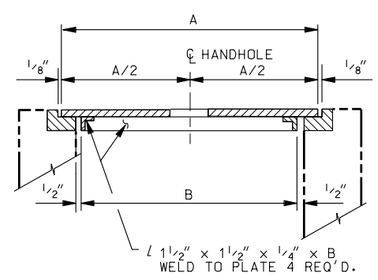

SECTION B-B

COVER DETAILS

DIMENSIONS					QUANTITIES (LB)		
W	A	B	C	T	COVER	FRAME	TOTAL
2′-0	2′-3¾	1′-10¾	8½″	½″	131	163	294
2′-6	2′-9¾	2′-4¾	11½″	⅝″	189	195	384

NO.	DATE	APPR.	REMARKS

REVISIONS

UTAH DEPARTMENT OF TRANSPORTATION
STANDARD DRAWINGS FOR ROAD AND BRIDGE CONSTRUCTION
SALT LAKE CITY, UTAH

RECOMMENDED FOR APPROVAL — JAN.01.2005 DATE
CHAIRMAN STANDARDS COMMITTEE
APPROVED — JAN.01.2005 DATE
DEPUTY DIRECTOR

SOLID COVER FOR
STD DWG DB 1
MS-18 LOADING

STD DWG
GF 14

DGN File:N:\Esa\Standard.Drawings\Imperial\2005Approved\Grates Frames and Trash Racks (GF)\gf14.dgn
15-DEC-2004