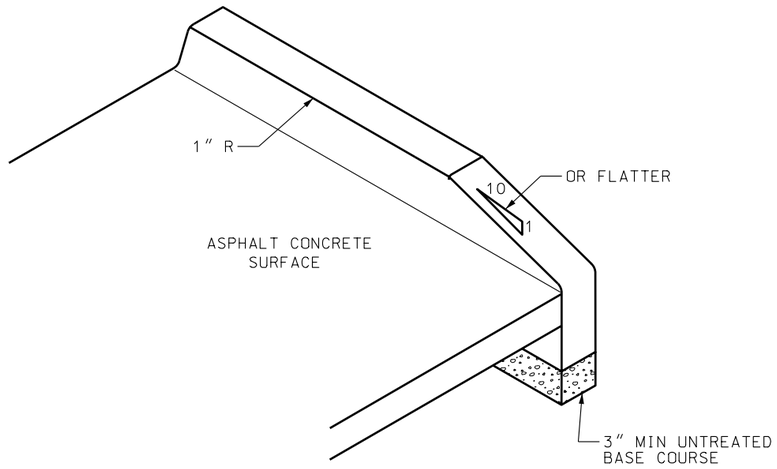

TYPICAL
CURB END DETAIL

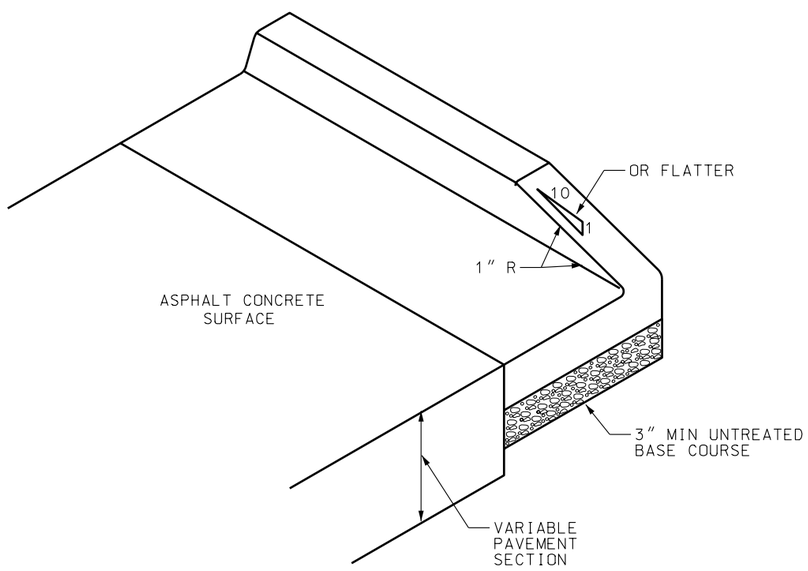

TYPICAL
CURB & GUTTER
END DETAIL

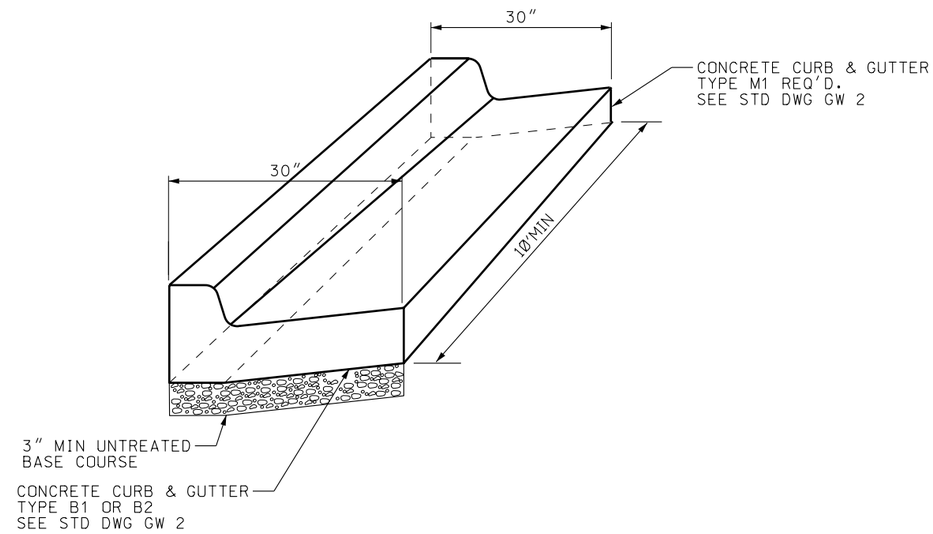

CURB & GUTTER
TRANSITION DETAIL

REVISIONS

NO.	DATE	APPR.	REMARKS

UTAH DEPARTMENT OF TRANSPORTATION
STANDARD DRAWINGS FOR ROAD AND BRIDGE CONSTRUCTION
SALT LAKE CITY, UTAH

RECOMMENDED FOR APPROVAL — JAN.01,2005 DATE
CHAIRMAN STANDARDS COMMITTEE APPROVED — JAN.01,2005 DATE
DEPUTY DIRECTOR

CONCRETE
CURB AND GUTTER
DETAILS

STANDARD DRAWING TITLE

STD DWG
GW 3

DGN File:N:\Esd\Standard.Drawings\Imperial\2005Approved\General Road Work (GW)\gw03.dgn
15-DEC-2004