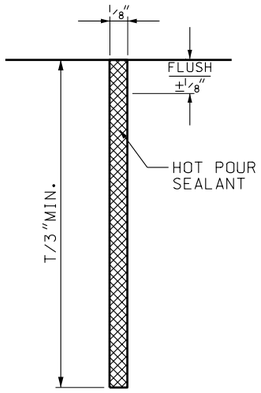

DETAIL "A"

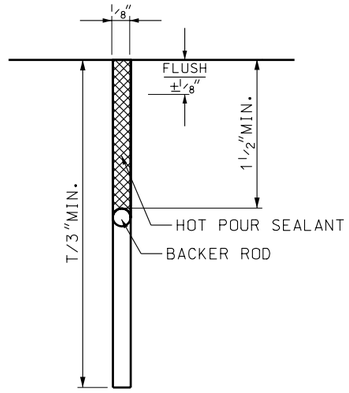

DETAIL "B"
OPTIONAL INSTALLATION

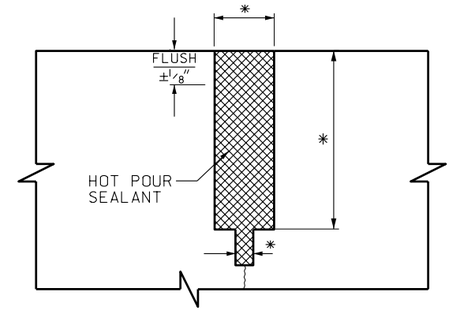

DETAIL "D"

EXISTING SILICONE JOINT
REHAB DETAIL

* ALL DIMENSIONS AS PER
EXISTING PAVEMENT

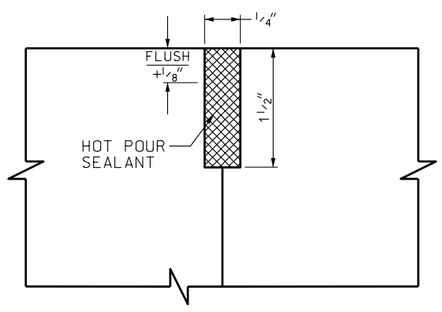

DETAIL "C"

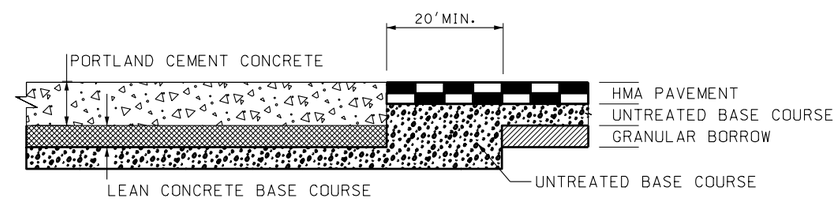

CONCRETE TO FLEXIBLE
PAVEMENT TRANSITION
DETAIL "E"

NO.	DATE	APPR.	REMARKS

REVISIONS

UTAH DEPARTMENT OF TRANSPORTATION
STANDARD DRAWINGS FOR ROAD AND BRIDGE CONSTRUCTION
SALT LAKE CITY, UTAH

RECOMMENDED FOR APPROVAL — JAN.01,2005 DATE
CHAIRMAN STANDARDS COMMITTEE APPROVED — JAN.01,2005 DATE
DEPUTY DIRECTOR

CONCRETE PAVEMENT
DETAILS FOR URBAN
AND INTERSTATE

STANDARD DRAWING TITLE

STD DWG
PV 3

DGN File:N:\Esd\Standard_Drawings\Imperial\2005Approved\Paving (PV)\pv03.dgn
15-DEC-2004