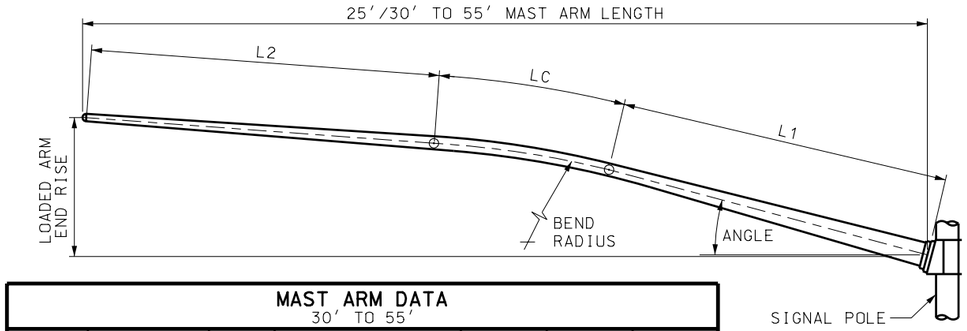

MAST ARM DATA 30' TO 55'						
LENGTH	LOADED ARM END RISE	ANGLE	BEND RADIUS	L1	LC	L2
30'	5'- 6"	16°	25'	15.79'	6.33'	8.80'
35'	5'- 6"	16°	70'	10.07'	17.72'	7.86'
40'	5'- 6"	16°	70'	9.75'	17.10'	13.78'
45'	5'- 6"	16°	70'	9.58'	16.49'	19.57'
50'	6'- 0"	13°	70'	15.95'	14.05'	20.66'
55'	6'- 0"	13°	70'	15.67'	13.44'	26.56'

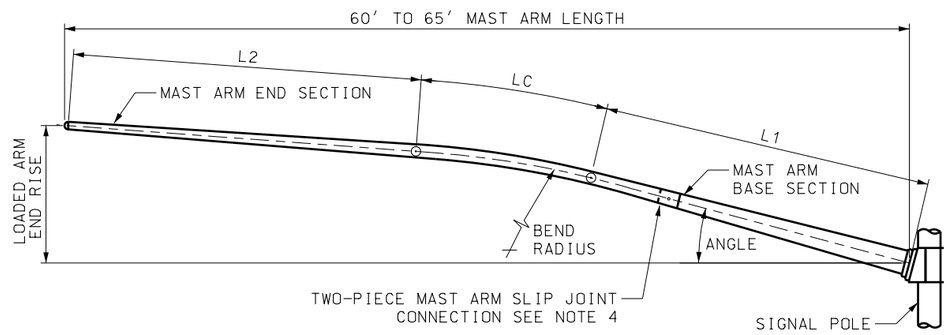

SIGNAL ARM DATA 60' AND 65'								
LENGTH	LOADED ARM END RISE	ANGLE	BASE SECTION	END SECTION	BEND RADIUS	L1	LC	L2
60'	6'- 0"	12°	18.49'	44.87'	70'	21.38'	10.38'	28.86'
65'	6'- 0"	12°	18.49'	49.87'	70'	21.33'	9.77'	34.55'

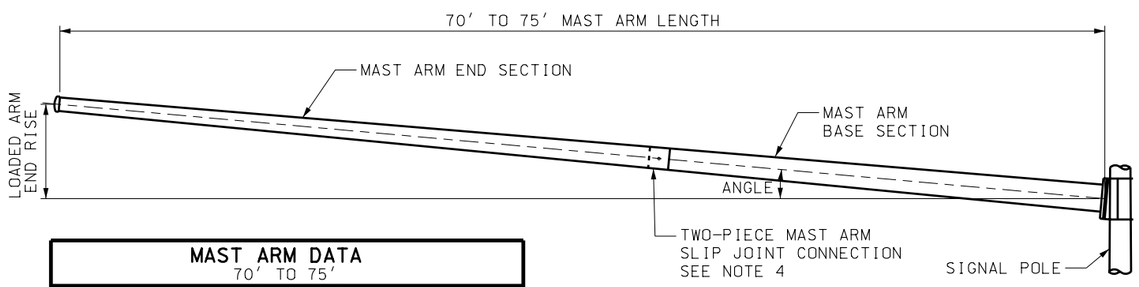

MAST ARM DATA 70' TO 75'				
LENGTH	LOADED ARM END RISE	ANGLE	BASE SECTION	END SECTION
70'	4"	3°	30.07'	42.44'
75'	7"	3°	30.07'	47.44'

NOTES:

1. SEE STD DWG SL 1A FOR SIGNAL POLE AND MAST ARM NOTES.
2. PROVIDE AND INSTALL SIGNAL HEAD BRACKET MOUNT. PROVIDE SLACK IN WIRE IN THE MAST ARM SO SIGNAL HEAD CAN ADJUST UP AND DOWN THE FULL EXTENT OF THE TUBE.
3. FIELD DRILL 1½" DIAMETER WIRING HOLE ALONG THE HORIZONTAL CENTROID OF THE MAST ARM AT EACH SIGNAL HEAD LOCATION. DEBURR AND INSTALL NEOPRENE GROMMET FOR WIRE PROTECTION PRIOR TO INSTALLING SIGNAL HEAD BRACKET.
4. FIELD ASSEMBLE TWO-PIECE MAST ARM SLIP JOINT TO ACHIEVE A SNUG FIT. APPLY ANTI-SIEZE COMPOUND AND PROVIDE MINIMUM OVERLAP NOT LESS THAN 1.5 TIMES INSIDE DIAMETER OF END SECTION.

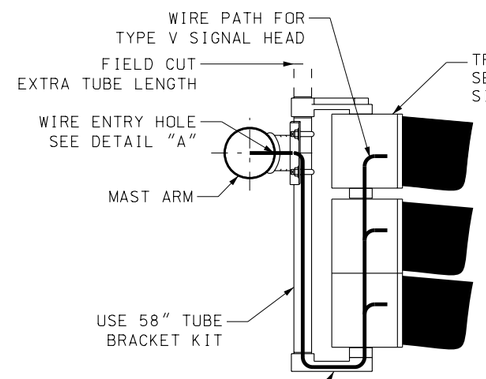

TYPE V MOUNT

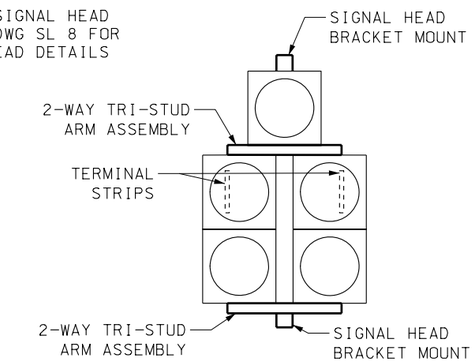

TYPE V CONFIGURATION

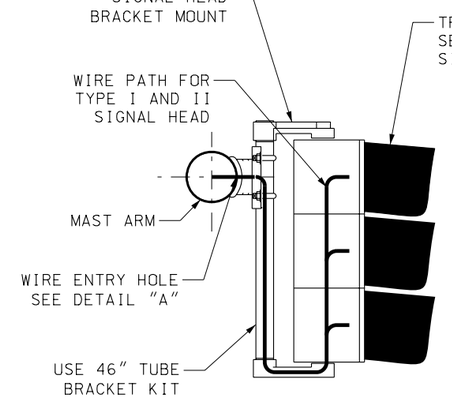

TYPE I AND II MOUNT

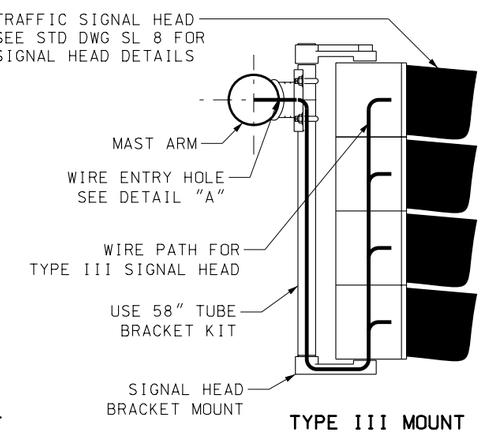

TYPE III MOUNT

SIGNAL HEAD BRACKET

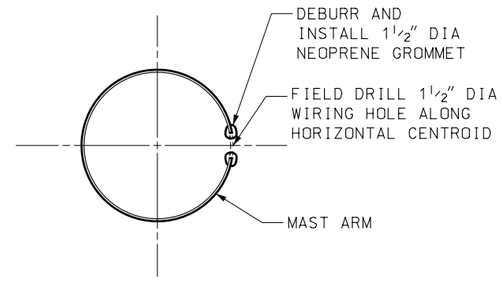

DETAIL "A"

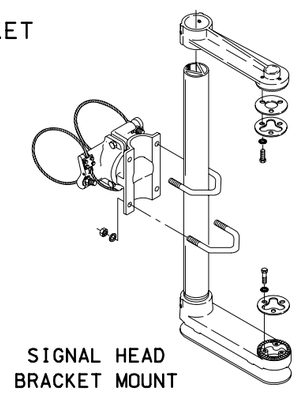

SIGNAL HEAD BRACKET MOUNT

REVISIONS				
NO.	DATE	APPR.	REMARKS	
1	02/23/06	L.M.	ENTIRE DRAWING REVISED.	

UTAH DEPARTMENT OF TRANSPORTATION
STANDARD DRAWINGS FOR ROAD AND BRIDGE CONSTRUCTION

RECOMMENDED FOR APPROVAL — DATE FEB.23,2006
CHAIRMAN STANDARDS COMMITTEE APPROVED — DATE FEB.23,2006
DEPUTY DIRECTOR

TRAFFIC SIGNAL MAST ARM DETAILS 30' THRU 75'

STANDARD DRAWING TITLE

STD DWG SL 2

DGN File:L:\Standard Drawings\Imperial\2006Approved\xChanges6Approved\sl02.dgn
01-MAR-2006