REGULATORY, WARNING, ROUTE MARKERS

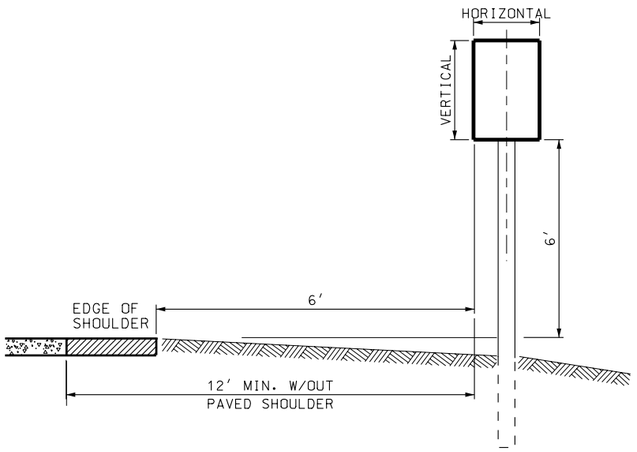

RURAL

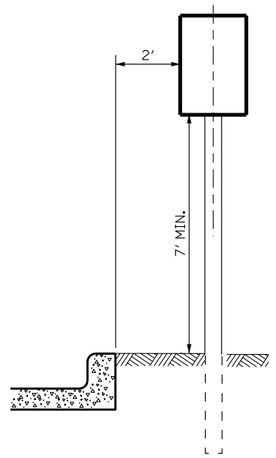

RESIDENTIAL – URBAN

SIGN INSTALLATION

GUIDE & DIRECTIONAL SIGNING

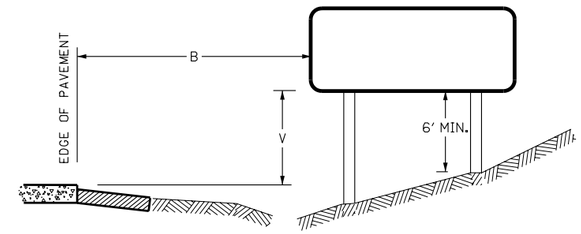

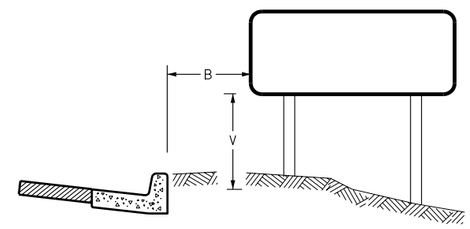

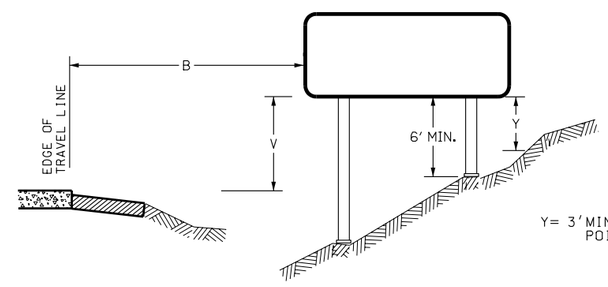

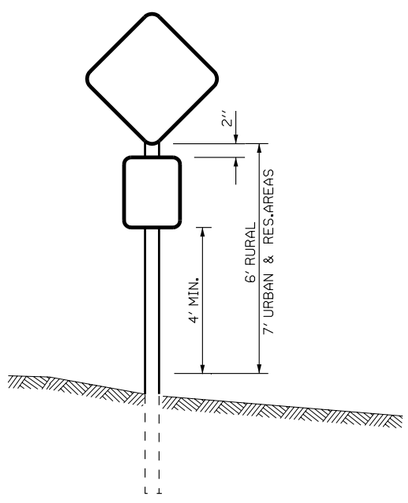

W/SUPPLEMENTAL SIGN

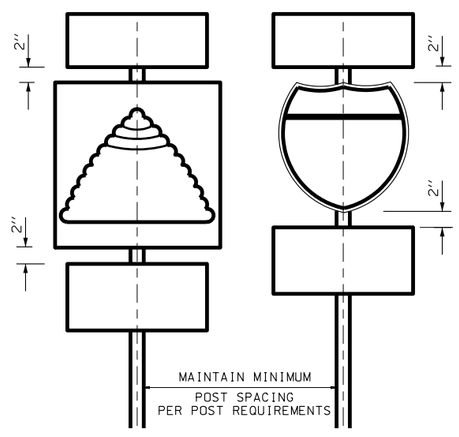

ROUTE MARKERS

GUIDE & DIRECTIONAL SIGN PLACEMENT

(B) LATERAL PLACEMENT			(V) VERTICAL PLACEMENT		
CONVENTIONAL		INTERSTATE	INTERSTATE	CONVENTIONAL	
RURAL	URBAN			RURAL	URBAN
6'– 12' FROM EDGE OF PAVEMENT OR SHOULDER	2' MIN WITH CURB	DESIRABLE – 30' FROM TRAVEL LANE ACCEPTABLE– 12' MIN FROM EDGE OF SHOULDER	DESIRABLE – 7' ACCEPTABLE – 6'	6'	7'
	2' MIN PLUS SHOULDER		7'		
	WITHOUT CURB	2' MIN WHEN BEHIND BARRIER	7'		

REVISIONS

NO.	DATE	APPR.	REMARKS

UTAH DEPARTMENT OF TRANSPORTATION
STANDARD DRAWINGS FOR ROAD AND BRIDGE CONSTRUCTION
SALT LAKE CITY, UTAH

RECOMMENDED FOR APPROVAL — JAN.01,2005 DATE
CHAIRMAN STANDARDS COMMITTEE
APPROVED — JAN.01,2005 DATE
DEPUTY DIRECTOR

PLACEMENT OF GROUND MOUNT SIGNS

STANDARD DRAWING TITLE

STD DWG
SN 7

DGN File: N:\Eas\Standard_Drawings\Imperial\2005Approved\Signs (SN)\sn07.dgn
15-DEC-2004