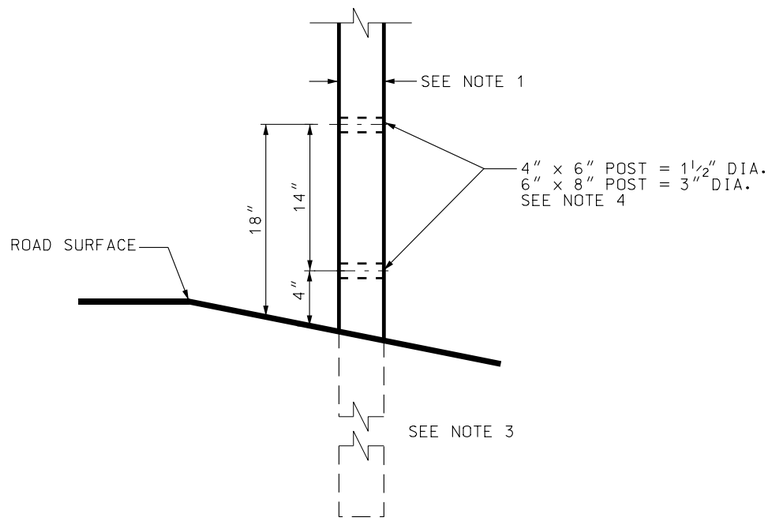

WEAKENED POST DETAIL

TIMBER SIGN POSTS (Nominal)

HORIZONTAL SIGN DIMENSION (inches)

VERTICAL SIGN DIMENSION (inches)	12	24	36	48	60	72	84	96	108	120	132	144
12	1 - 4x4 4	1 - 4x4 4	1 - 4x4 4	1 - 4x4 4	2 - 4x4 4	2 - 4x4 4	2 - 4x4 4	2 - 4x4 4	2 - 4x4 4	2 - 4x4 4	2 - 4x4 4	2 - 4x4 4
18	1 - 4x4 4	1 - 4x4 4	1 - 4x4 4	1- 4x6 4	2 - 4x4 4	2 - 4x4 4	2 - 4x4 4	2 - 4x6 4	2 - 4x6 4	2 - 4x6 4	2 - 4x6 4	2 - 4x6 4
24	1 - 4x4 4	1 - 4x4 4	1- 4x6 4	1- 4x6 4	2 - 4x4 4	2 - 4x6 4	2 - 4x6 4	2 - 4x6 4	2 - 4x6 4	2 - 4x6 4	2 - 4x6 4	2 - 4x6 4
30	1 - 4x4 4	1 - 4x4 4	1- 4x6 4	1- 4x6 4	2 - 4x6 4	2 - 4x6 4	2 - 4x6 4	2 - 4x6 4	2 - 4x6 4	2 - 4x6 4	3 - 4x6 4	3 - 4x6 4
36	1 - 4x4 4	1- 4x6 4	1- 4x6 4	1- 4x6 4	2 - 4x6 4	2 - 4x6 4	2 - 4x6 4	2 - 4x6 4	3 - 4x6 4	3 - 4x6 4	3 - 4x6 4	3 - 4x6 4
42	1 - 4x4 4	1- 4x6 4	1- 4x6 4	1- 4x6 4	2 - 4x6 4	2 - 4x6 4	2 - 4x6 4	3 - 4x6 4	3 - 4x6 4	3 - 4x6 4	2 - 6x8 5	2 - 6x8 5
48	1 - 4x4 4	1- 4x6 4	1- 4x6 4	2 - 4x6 4	2 - 4x6 4	2 - 4x6 4		3 - 4x6 4	3 - 4x6 4	2 - 6x8 4	2 - 6x8 5	2 - 6x8 5
54	1 - 4x4 4	1- 4x6 4	1- 6x8 5	2 - 4x6 4	2 - 4x6 4	1- 6x8 5		2 - 6x8 5	2 - 6x8 5	2 - 6x8 5	2 - 6x8 5	2 - 6x8 5
60	1- 4x6 4	1- 4x6 4	1- 6x8 5	2 - 4x6 4	1- 6x8 5	1- 6x8 5		2 - 6x8 5	2 - 6x8 5	2 - 6x8 5	2 - 6x8 5	2 - 6x8 5
66	1- 4x6 4	1- 4x6 4	1- 6x8 5	2 - 4x6 4	1- 6x8 5			2 - 6x8 5	2 - 6x8 5	2 - 6x8 5	2 - 6x8 5	
72	1- 4x6 4	1- 6x8 5	1- 6x8 5	1- 6x8 5	1- 6x8 5			2 - 6x8 5	2 - 6x8 5	2 - 6x8 5		

LEGEND 2 - 4x6 — NUMBER & SIZE (inch x inch) OF POSTS
5 — EMBEDMENT DEPTH IN FEET

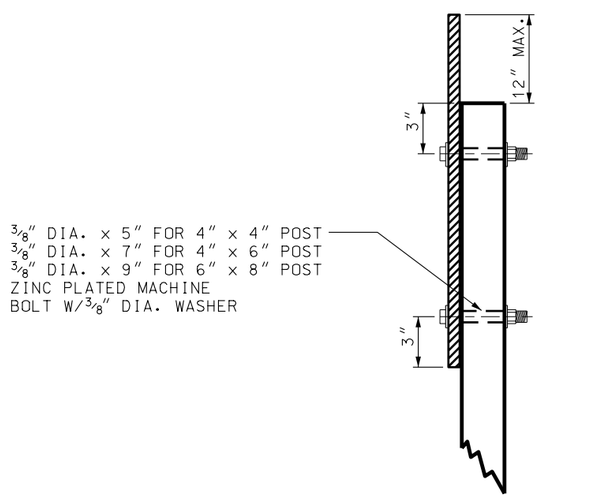

SIDE VIEW

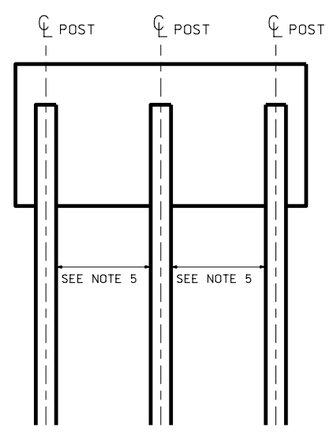

MULTIPLE POST SIGN

NOTES:

1. NARROW POST DIMENSION TO FACE TRAFFIC.
2. USE ONE 4″x 6″ POST FOR MULTIPLE SIGN INSTALLATION ON SINGLE POST, EXCLUDING ROUTE MARKERS.
3. MINIMUM DEPTH OF EMBEDMENT: 4′ UNLESS 5′ IS SHOWN.
4. FIELD DRILL TWO HOLES IN THE CENTER OF THE POST. DRILL PERPENDICULAR TO THE CENTER LINE OF THE ROAD.
5. MINIMUM SPACING BETWEEN POST:

	POST SIZE	SPACING
FOR 3 OR MORE POSTS	4″ x 4″	= 4′
FOR 3 OR MORE POSTS	4″ x 6″	= 4′
FOR 2 OR MORE POSTS	6″ x 8″	= 7′

REVISIONS

NO.	DATE	APPR.	REMARKS
1	04/28/05	B.A.	CORRECTED NOTE CALLOUT IN WEAKENED POST DETAIL.

UTAH DEPARTMENT OF TRANSPORTATION
STANDARD DRAWINGS FOR ROAD AND BRIDGE CONSTRUCTION
SALT LAKE CITY, UTAH

RECOMMENDED FOR APPROVAL — APR.28,2005 DATE
CHAIRMAN STANDARDS COMMITTEE APPROVED — APR.28,2005 DATE
DEPUTY DIRECTOR

STANDARD DRAWING TITLE
GROUND MOUNTED
TIMBER SIGN POST (P1)

STD DWG
SN 8

DGN File:L:\Standard Drawings\Imperial\2005Approved\xChange2Approved\sn08.dgn
10-MAY-2005