TUBULAR STEEL POST (P2)

(SOCKET SYSTEM)
(SINGLE OR DOUBLE POST)

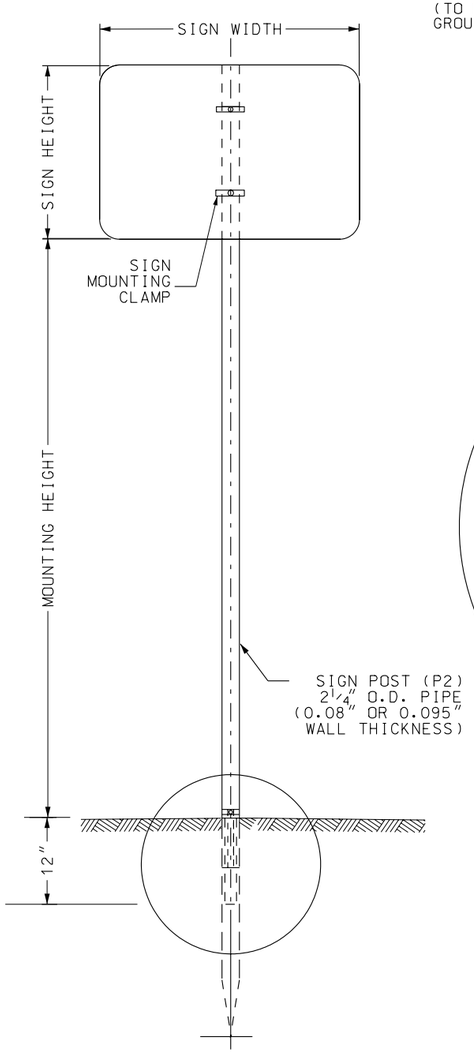

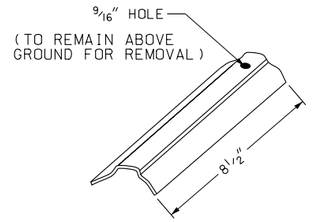

WEDGE

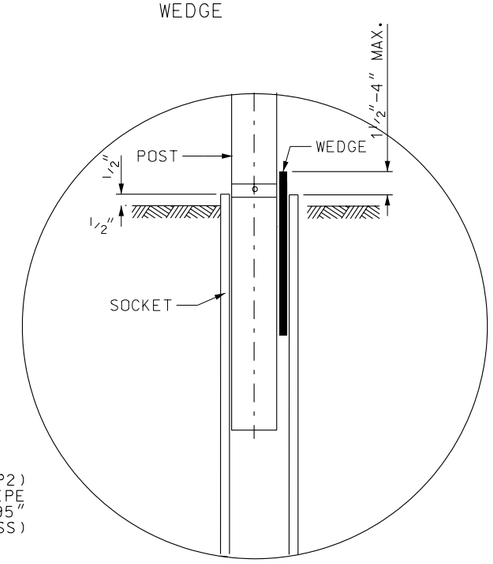

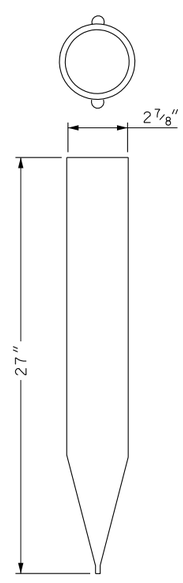

TUBULAR SOCKET

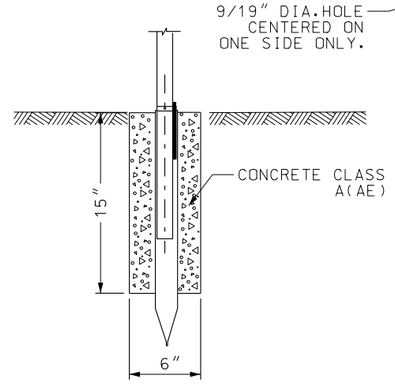

CONCRETE FOUNDATION

SEE NOTE 1

TUBULAR STEEL SIGN POSTS													
	HORIZONTAL SIGN DIMENSION (inch)												
VERTICAL SIGN DIMENSION (inch)	12	24	36	48	60	72	84	96	108	120	132	144
12	1 P2	1 P2	1 P2	2 P2	2 P2	2 P2	2 P2	2 P2	2 P2	2 P2	2 P2	2 P2
18	1 P2	1 P2	1 P2	2 P2	2 P2	2 P2	2 P2	2 P2	2 P2	2 P2	2 P2	2 P2
24	1 P2	1 P2	1 P2	2 P2	2 P2	2 P2	2 P2	2 P2	2 P2	2 P2	1 P4	1 P4
30	1 P2	1 P2	1 P2	2 P2	2 P2	2 P2	2 P2	2 P2	1 P4	1 P4	1 P4	1 P4
36	1 P2	1 P2	1 P2	2 P2	2 P2	2 P2	1 P4	1 P4	1 P4	1 P4	1 P4	1 P4
42	1 P2	1 P2	1 P2	2 P2	2 P2	1 P4	1 P4	1 P4	2 P4	2 P4	2 P4	2 P4
48	1 P2	1 P2	2 P2	2 P2	2 P2	1 P4	1 P4	2 P4	2 P4	2 P4	2 P4	2 P4
54	1 P2	1 P2	2 P2	2 P2	1 P4	1 P4	2 P4	2 P4	2 P4	2 P4	2 P4	2 P4
60	1 P2	1 P2	2 P2	2 P2	1 P4	1 P4	2 P4	2 P4	2 P4	2 P4	2 P4	2 P4
66	1 P4	1 P4	1 P4	1 P4	1 P4	2 P4	2 P4	2 P4	2 P4	2 P4		
72	1 P4	1 P4	1 P4	1 P4	1 P4	2 P4	2 P4	2 P4	2 P4	2 P4		

LEGEND: 1 / P4 — NUMBER OF POSTS / TYPE OF POST

P2 = $2\frac{3}{8}$"x 0.80 (SOCKET SYM.)
P4 = $2\frac{1}{2}$"x SCH. 80 (SLIPBASE)
REFER TO STD DWG SN 11

NOTES:

1. FOR SOFT SOIL CONDITIONS USE TRIANGULAR STEEL SIGN POST ANCHOR OR PLACE TUBULAR SOCKET IN A 6" DIAMETER BY 15" DEEP CONCRETE FOUNDATION.
2. YELLOW POSTS MAYBE USED FOR LEFT SIDE (MEDIAN) SIGN INSTALLATIONS AND FOR SIGN LOCATIONS HAVING A HIGH PROBABLY OF IMPACTS AS DETERMINED BY THE REGION TRAFFIC ENGINEER.
3. P4 SIGN POST MAY BE USED FOR MOST SMALL AREA SIGN. CALCULATE POST NEEDS AT 30 square feet OF SIGN PER POST. SEE STANDARD FOR POST SPACING.

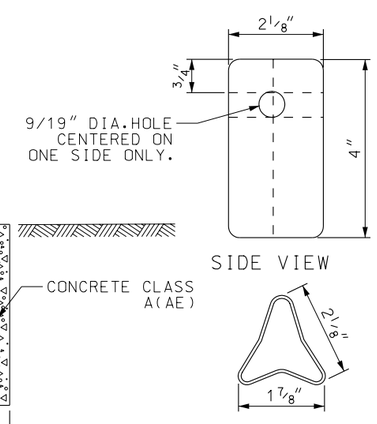

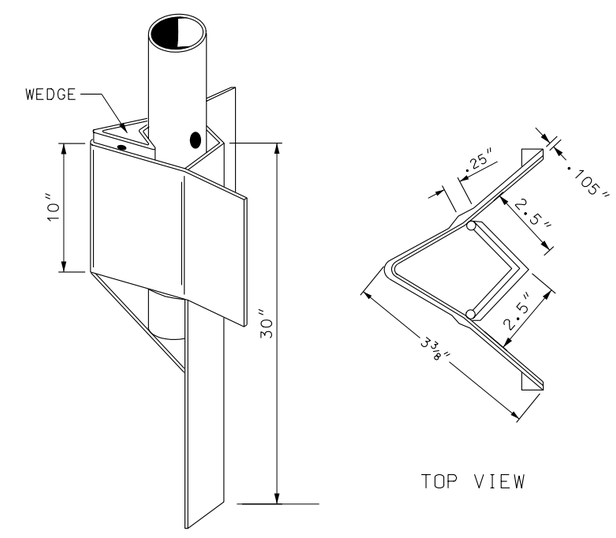

TRANGULAR STEEL SIGN POST ANCHOR
SEE NOTE 1

POST NOTES:

POSTS PRE-PUNCHED WITH 3/8" HOLES, MOUNT SIGN DIRECTLY TO POST OR USE AN APPROVED MOUNTING CLAMP. SPACING OF HOLES FROM TOP IN INCHES ARE AS FOLLOWS:

1",3".10",16",21",23",24",27",33",37",39" AND 45"

NO.	DATE	APPR.	REMARKS

REVISIONS

UTAH DEPARTMENT OF TRANSPORTATION
STANDARD DRAWINGS FOR ROAD AND BRIDGE CONSTRUCTION
SALT LAKE CITY, UTAH

RECOMMENDED FOR APPROVAL — JAN.01,2005 DATE
CHAIRMAN STANDARDS COMMITTEE APPROVED — JAN.01,2005 DATE
DEPUTY DIRECTOR

GROUND MOUNTED TUBULAR STEEL SIGN POST (P2)

STANDARD DRAWING TITLE

STD DWG
SN 9

DGN File: N:\Esd\Standard Drawings\Imperial\2005Approved\Signs (SN)\sn09.dgn

15-DEC-2004