HORIZONTAL SIGN DIMENSION (W)

VERTICAL SIGN DIMENSION (V)	ONE POST PER SIGN					TWO POSTS PER SIGN											THREE POSTS PER SIGN							
	1'-0"	2'-0"	3'-0"	4'-0"	5'-0"	6'-0"	7'-0"	8'-0"	9'-0"	10'-0"	11'-0"	12'-0"	13'-0"	14'-0"	15'-0"	16'-0"	17'-0"	18'-0"	19'-0"	20'-0"	21'-0"	22'-0"	23'-0"	24'-0"
1'-0"	3"Ø 3'-0"	3"Ø 3'-0"	3"Ø 3'-0"	3"Ø 3'-0"	3"Ø 3'-0"	S3X5.7 3'-0"	S3X5.7 3'-0"	S3X5.7 3'-0"	S3X5.7 3'-0"	S3X5.7 3'-0"	S3X5.7 3'-0"	S3X5.7 3'-0"	S3X5.7 3'-0"	S3X5.7 3'-0"	S3X5.7 3'-0"	S3X5.7 3'-0"	S3X5.7 3'-0"	S3X5.7 3'-0"	S3X5.7 3'-0"	S3X5.7 3'-0"	S3X5.7 3'-0"	S3X5.7 3'-0"	S3X5.7 3'-0"	S3X5.7 3'-0"
1'-6"	3"Ø 3'-0"	3"Ø 3'-0"	3"Ø 3'-0"	3"Ø 3'-0"	3"Ø 3'-0"	S3X5.7 3'-0"	S3X5.7 3'-0"	S3X5.7 3'-0"	S3X5.7 3'-0"	S3X5.7 3'-0"	S3X5.7 3'-0"	S3X5.7 3'-0"	S3X5.7 3'-0"	S3X5.7 3'-0"	S4X9.5 3'-0"	S4X9.5 3'-0"	S3X5.7 3'-0"	S3X5.7 3'-0"	S3X5.7 3'-0"	S3X5.7 3'-0"	S4X9.5 3'-0"	S4X9.5 3'-0"	S4X9.5 3'-0"	S4X9.5 3'-0"
2'-0"	3"Ø 3'-0"	3"Ø 3'-0"	3"Ø 3'-0"	3"Ø 3'-0"	3"Ø 3'-0"	S3X5.7 3'-0"	S3X5.7 3'-0"	S3X5.7 3'-0"	S3X5.7 3'-0"	S3X5.7 3'-0"	S4X9.5 3'-0"	S4X9.5 3'-0"	S4X9.5 3'-0"	S4X9.5 3'-0"	S4X9.5 3'-0"	S4X9.5 3'-0"	S4X9.5 3'-0"	S4X9.5 3'-0"	S4X9.5 3'-0"	S4X9.5 3'-0"	S4X9.5 3'-0"	S4X9.5 3'-0"	S4X9.5 3'-0"	S4X9.5 3'-0"
2'-6"	3"Ø/ 3'-0"	3"Ø 3'-0"	3"Ø 3'-0"	3"Ø 3'-0"	3"Ø 3'-0"	S3X5.7 3'-0"	S3X5.7 3'-0"	S3X5.7 3'-0"	S4X9.5 3'-0"	S4X9.5 3'-0"	S4X9.5 3'-0"	S4X9.5 3'-0"	S4X9.5 3'-0"	S4X9.5 3'-0"	S4X9.5 3'-0"	S4X9.5 3'-0"	S4X9.5 3'-0"	S4X9.5 3'-0"	S4X9.5 3'-0"	S4X9.5 3'-0"	S4X9.5 3'-0"	S4X9.5 3'-0"	S6X12.5 3'-0"	S6X12.5 3'-0"
3'-0"	3"Ø 3'-0"	3"Ø 3'-0"	3"Ø 3'-0"	3"Ø 3'-0"	4"Ø 3'-0"	S3X5.7 3'-0"	S3X5.7 3'-0"	S4X9.5 3'-0"	S4X9.5 3'-0"	S4X9.5 3'-0"	S4X9.5 3'-0"	S4X9.5 3'-0"	S4X9.5 3'-0"	S6X12.5 3'-6"	S6X12.5 3'-0"	S6X12.5 3'-0"	S4X9.5 3'-0"	S4X9.5 3'-0"	S4X9.5 3'-0"	S6X12.5 3'-6"	S6X12.5 3'-6"	S6X12.5 3'-6"	S6X12.5 3'-6"	S6X12.5 3'-0"
4'-0"	3"Ø 3'-0"	3"Ø 3'-0"	3"Ø 3'-6"	4"Ø 3'-6"	4"Ø 3'-6"	S4X9.5 3'-6"	S4X9.5 3'-6"	S4X9.5 3'-6"	S4X9.5 4'-0"	S4X9.5 3'-6"	S6X12.5 3'-6"	S6X12.5 3'-6"	S6X12.5 3'-0"	S6X12.5 3'-6"	S6X12.5 3'-6"	S6X12.5 3'-6"	S6X12.5 3'-6"	S6X12.5 3'-6"	S6X12.5 3'-0"	S6X12.5 3'-6"	S6X12.5 3'-6"	S6X12.5 3'-6"	S6X12.5 3'-6"	S6X12.5 3'-6"
5'-0"	3"Ø 3'-0"	3"Ø 3'-0"	4"Ø 3'-6"	4"Ø 3'-6"	5"Ø 3'-6"	S4X9.5 3'-6"	S4X9.5 4'-0"	S4X9.5 4'-0"	S6X12.5 4'-6"	S6X12.5 4'-0"	S6X12.5 3'-0"	S6X12.5 3'-6"	S6X12.5 3'-6"	S6X12.5 3'-6"	S6X12.5 4'-0"	S6X12.5 4'-0"	S6X12.5 3'-6"	S6X12.5 3'-6"	S6X12.5 3'-6"	S6X12.5 3'-6"	S6X12.5 4'-0"	S6X12.5 4'-0"	S6X12.5 4'-0"	S6X17.5 4'-0"
6'-0"	3"Ø 3'-0"	4"Ø 3'-0"	4"Ø 3'-0"	5"Ø 3'-0"	5"Ø 3'-0"	S4X9.5 4'-0"	S6X12.5 4'-0"	S6X12.5 4'-6"	S6X12.5 3'-0"	S6X12.5 3'-6"	S6X12.5 3'-6"	S6X12.5 4'-0"	S6X12.5 4'-0"	S6X17.5 4'-0"	S6X17.5 4'-6"	S8X18.4 4'-6"	S6X12.5 3'-6"	S6X12.5 4'-0"	S6X12.5 4'-0"	S6X17.5 4'-0"	S6X17.5 4'-0"	S6X17.5 4'-6"	S8X18.4 4'-6"	S8X18.4 4'-6"
7'-0"	3"Ø 3'-0"	4"Ø 3'-0"	4"Ø 3'-0"	5"Ø 3'-0"	5"Ø 3'-6"	S6X12.5 4'-0"	S6X12.5 3'-0"	S6X12.5 3'-6"	S6X12.5 3'-6"	S6X12.5 3'-6"	S6X12.5 4'-0"	S6X17.5 4'-0"	S6X17.5 4'-6"	S8X18.4 4'-6"	S8X18.4 4'-6"	S8X18.4 5'-0"	S6X17.5 4'-0"	S6X17.5 4'-0"	S6X17.5 4'-6"	S8X18.4 4'-6"	S8X18.4 4'-6"	S8X18.4 5'-0"	S8X18.4 5'-0"	S8X18.4 5'-0"
8'-0"	3"Ø 3'-0"	4"Ø 3'-0"	5"Ø 3'-0"	5"Ø 3'-6"	6"Ø 4'-0"	S6X12.5 3'-0"	S6X12.5 3'-6"	S6X12.5 3'-6"	S6X12.5 4'-0"	S6X12.5 4'-0"	S6X17.5 4'-6"	S8X18.4 4'-6"	S8X18.4 4'-6"	S8X18.4 5'-0"	S8X18.4 5'-0"	S8X18.4 5'-6"	S8X18.4 4'-6"	S8X18.4 4'-6"	S8X18.4 4'-6"	S8X18.4 5'-0"	S8X18.4 5'-0"	S8X18.4 5'-0"	S8X18.4 5'-6"	S8X18.4 5'-6"
9'-0"	3"Ø 3'-0"	4"Ø 3'-0"	5"Ø 3'-6"	6"Ø 4'-0"	6"Ø 4'-0"	S6X12.5 3'-6"	S6X12.5 3'-6"	S6X12.5 4'-0"	S6X17.5 4'-0"	S6X17.5 4'-6"	S8X18.4 4'-6"	S8X18.4 5'-0"	S8X18.4 5'-0"	S8X18.4 5'-6"	S8X18.4 5'-6"	S8X18.4 5'-6"	S8X18.4 5'-0"	S8X18.4 5'-0"	S8X18.4 5'-0"	S8X18.4 5'-0"	S8X18.4 5'-6"	S8X18.4 5'-6"	W10X19.0 6'-0"	W10X19.0 6'-0"
10'-0"	3"Ø 3'-0"	5"Ø 3'-0"	5"Ø 3'-6"	6"Ø 4'-0"	6"Ø 4'-6"	S6X12.5 3'-6"	S6X12.5 4'-0"	S6X17.5 4'-6"	S6X17.5 4'-6"	S8X18.4 5'-0"	S8X18.4 5'-0"	S8X18.4 5'-6"	S8X18.4 5'-6"	S8X18.4 6'-0"	W10X19.0 6'-0"	W10X19.0 6'-6"	S8X18.4 5'-6"	S8X18.4 5'-6"	S8X18.4 6'-0"	S8X18.4 6'-0"	W10X19.0 6'-0"	W10X19.0 6'-6"	W10X19.0 6'-6"	W10X19.0 6'-6"
11'-0"	4"Ø 3'-0"	5"Ø 3'-0"	6"Ø 3'-6"	6"Ø 4'-6"	8"Ø 5'-0"	S6X12.5 4'-0"	S6X17.5 4'-6"	S6X17.5 4'-6"	S8X18.4 5'-0"	S8X18.4 5'-0"	S8X18.4 5'-6"	S8X18.4 5'-6"	W10X19.0 6'-0"	W10X19.0 6'-0"	W10X19.0 6'-6"	W10X19.0 7'-0"	S8X18.4 5'-6"	S8X18.4 5'-6"	W10X19.0 6'-0"	W10X19.0 6'-0"	W10X19.0 6'-6"	W10X19.0 6'-6"	W10X19.0 7'-0"	W10X22.0 7'-0"
12'-0"	4"Ø 3'-0"	5"Ø 3'-0"	6"Ø 4'-0"	6"Ø 4'-6"	8"Ø 5'-0"	S6X12.5 4'-0"	S6X17.5 4'-6"	S6X18.4 4'-6"	S8X18.4 5'-0"	S8X18.4 5'-0"	S8X18.4 5'-6"	W10X19.0 6'-0"	W10X19.0 6'-0"	W10X19.0 6'-6"	W10X22.0 6'-6"	W10X22.0 7'-0"	W10X19.0 5'-6"	W10X19.0 6'-0"	W10X19.0 6'-0"	W10X19.0 6'-6"	W10X19.0 6'-6"	W10X22.0 6'-6"	W10X22.0 7'-0"	W10X22.0 7'-0"
13'-0"	4"Ø 3'-0"	5"Ø 3'-6"	6"Ø 4'-0"	8"Ø 5'-0"	8"Ø 5'-6"	S6X17.5 4'-0"	S8X18.4 4'-6"	S8X18.4 5'-0"	S8X18.4 5'-0"	S8X18.4 5'-6"	W10X19.0 6'-0"	W10X19.0 6'-0"	W10X19.0 6'-6"	W10X22.0 6'-6"	W10X22.0 7'-0"	W10X22.0 7'-0"	W10X19.0 6'-0"	W10X19.0 6'-0"	W10X19.0 6'-6"	W10X22.0 6'-6"	W10X22.0 7'-0"	W10X22.0 7'-0"	W10X22.0 7'-0"	W10X22.0 7'-6"
14'-0"	4"Ø 3'-0"	5"Ø 3'-6"	6"Ø 4'-6"	8"Ø 5'-0"	8"Ø 5'-6"	S6X17.5 4'-6"	S8X18.4 5'-0"	S8X18.4 5'-0"	S8X18.4 5'-6"	W10X19.0 6'-0"	W10X19.0 6'-0"	W10X19.0 6'-6"	W10X22.0 6'-6"	W10X22.0 7'-0"	W10X26.0 7'-6"	W10X26.0 7'-6"	W10X19.0 6'-6"	W10X22.0 6'-6"	W10X22.0 7'-0"	W10X22.0 7'-0"	W10X22.0 7'-0"	W10X26.0 7'-6"	W10X26.0 7'-6"	W10X30.0 8'-0"
15'-0"	4"Ø 3'-0"	6"Ø 3'-6"	6"Ø 4'-6"	8"Ø 5'-6"	8"Ø 6'-0"	S8X18.4 4'-6"	S8X18.4 5'-0"	S8X18.4 5'-6"	S8X18.4 5'-6"	W10X19.0 6'-0"	W10X19.0 6'-6"	W10X22.0 6'-6"	W10X22.0 7'-0"	W10X26.0 7'-6"	W10X30.0 7'-6"	W10X30.0 8'-0"	W10X22.0 6'-6"	W10X22.0 7'-0"	W10X22.0 7'-0"	W10X26.0 7'-6"	W10X26.0 7'-6"	W10X26.0 7'-6"	W10X30.0 8'-0"	W10X30.0 8'-0"
16'-0"	4"Ø 3'-0"	6"Ø 4'-0"	8"Ø 4'-6"	8"Ø 5'-6"	8"Ø 6'-0"	S8X18.4 5'-0"	S8X18.4 5'-0"	S8X18.4 5'-6"	W10X19.0 6'-0"	W10X19.0 6'-6"	W10X22.0 6'-6"	W10X22.0 7'-0"	W10X26.0 7'-6"	W10X30.0 7'-6"	W10X30.0 8'-0"	W10X30.0 8'-6"	W10X22.0 7'-0"	W10X22.0 7'-0"	W10X26.0 7'-6"	W10X26.0 7'-6"	W10X30.0 8'-0"	W10X30.0 8'-0"	W10X30.0 8'-6"	W10X30.0 8'-6"

USE 10' WIDTH IF SIZE FALLS IN THIS AREA

WIDTH W	SPACING FOR POSTS
1'- 5'	ONE POST
6'	1'* 4'* 1'
7'	1'* 5'* 1'
8'	1'* 6'* 1'
9'	1'* 7'* 1'
10'	1'* 8'* 1'
11'	1.5'* 8'* 1.5'
12'	2'* 8'* 2'
13'	2.5'* 8'* 2.5'
14'	3'* 8'* 3'
15'	3.5'* 8'* 3.5'
16'	4'* 8'* 4'
17'	1'* 7.5'* 7.5' * 1'
18'	1'* 8'* 8' * 1'
19'	1.5'* 8'* 8' * 1.5'
20'	2'* 8'* 8' * 2'
21'	2.5'* 8'* 8' * 2.5'
22'	3'* 8'* 8' * 3'
23'	3.5'* 8'* 8' * 3.5'
24'	4'* 8'* 8' * 4'

(*)REPRESENTS ONE POST

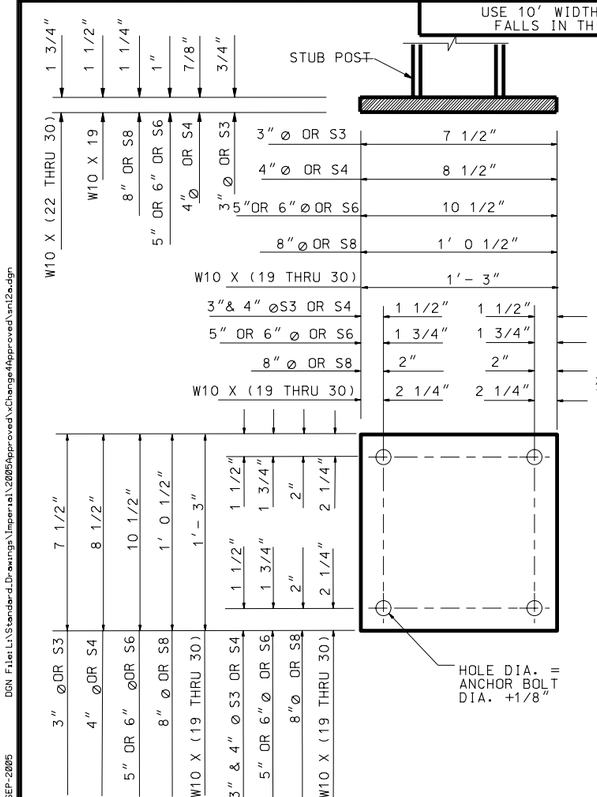

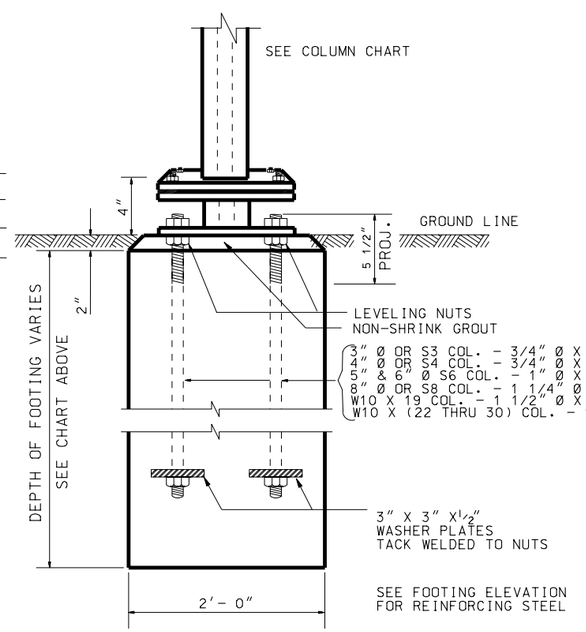

FOOTING DETAILS

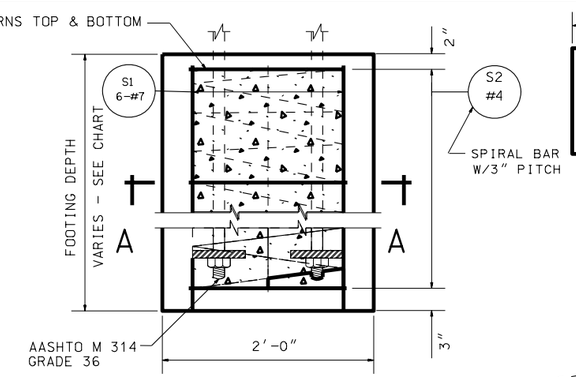

FOOTING ELEVATION

BAR	LENGTH
S1	FOOTING DEPTH MINUS 2"
S2	1'-8" OUTSIDE DIAMETER

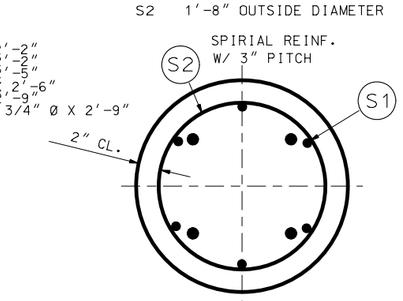

SECTION A – A

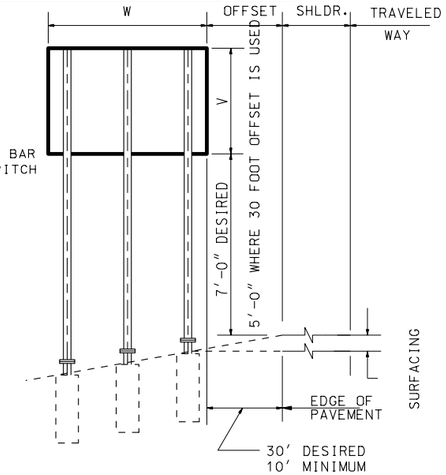

REAR ELEVATION

NOTES:

1. ENTER CHART WITH KNOWN HORIZONTAL AND VERTICAL DIMENSIONS OF SIGN. PROCEED HORIZONTALLY AND VERTICALLY FROM GIVEN DIMENSIONS TO INTERSECTING SQUARE WHICH GIVES IN ORDER, TOP: NUMBER, SIZE AND WEIGHT OF SUPPORT SECTION OR OF STANDARD STRENGTH PIPE COLUMNS, BOTTOM: MINIMUM REQUIRED DEPTH OF FOOTING.
2. SEE STD DWG SN 12B FOR MATERIAL SPECIFICATIONS NOT GIVEN AND GENERAL NOTES.
3. DO NOT ATTACH SIGNS BELOW HINGE POINT.

NO.	DATE	APPR.	REMARKS
1	08/25/05	B.W.	REVISED/CLARIFIED FOUNDATION REINFORCING STEEL.

REVISIONS

UTAH DEPARTMENT OF TRANSPORTATION
STANDARD DRAWINGS FOR ROAD AND BRIDGE CONSTRUCTION
SALT LAKE CITY, UTAH

RECOMMENDED FOR APPROVAL — AUG.25,2005 DATE
CHAIRMAN STANDARDS COMMITTEE
APPROVED — AUG.25,2005 DATE
DEPUTY DIRECTOR

GROUND MOUNTED SIGN INSTALLATION DETAILS

STANDARD DRAWING TITLE

STD DWG
SN 12A

DGN File:L:\Standard Drawings\Imperial\2005\Approved\x\Change4\Approved\sn12a.dgn
06-SEP-2005