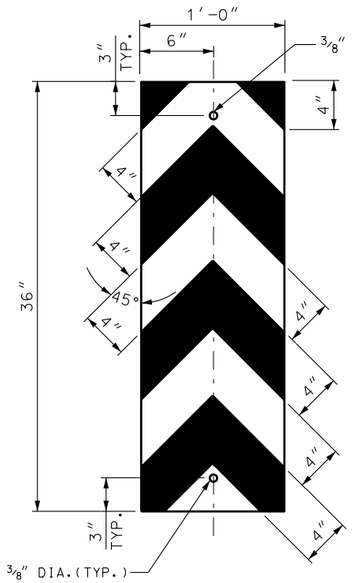

TRAFFIC PASS EITHER SIDE
OM-3C

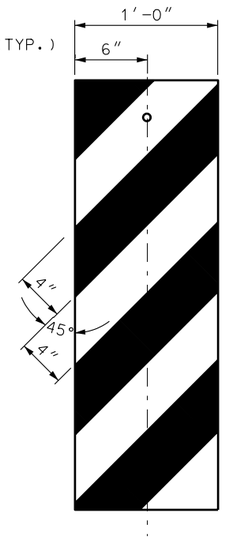

TRAFFIC PASS LEFT
OM-3R

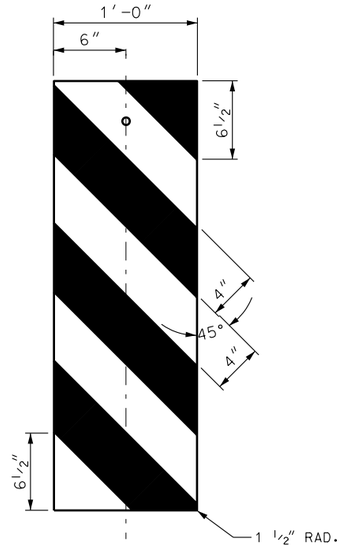

TRAFFIC PASS RIGHT
OM-3L

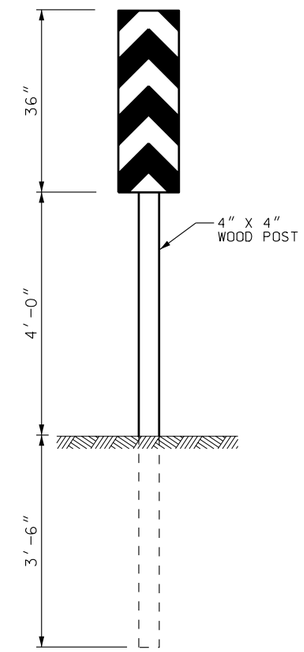

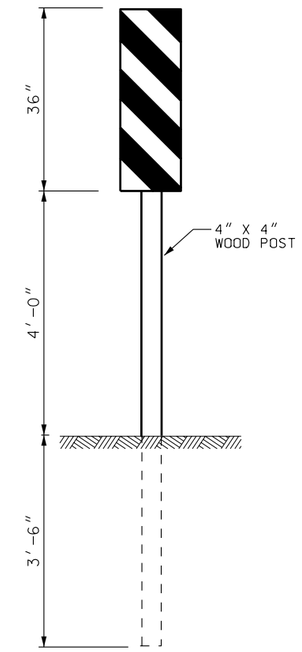

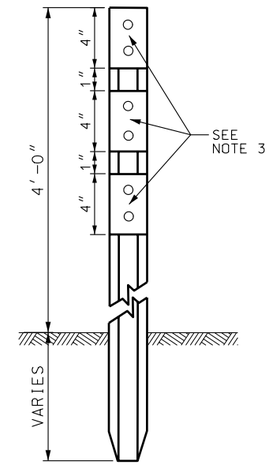

BARRIER MARKER
SEE NOTE 2

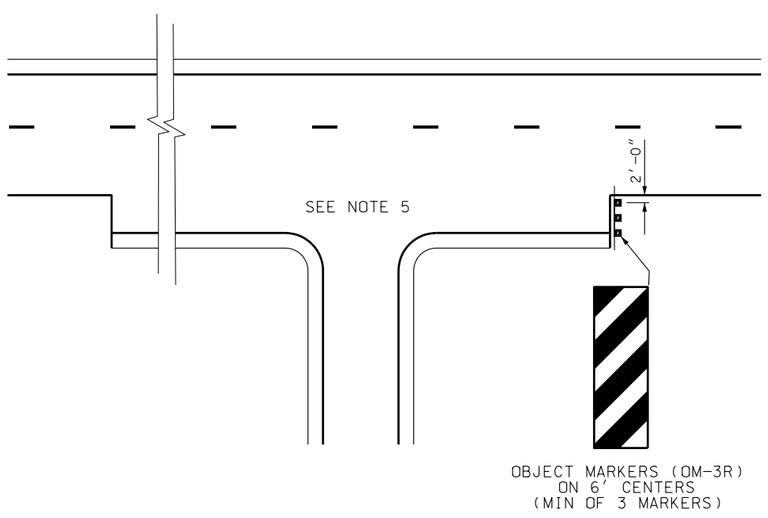

PAVEMENT TRANSITION

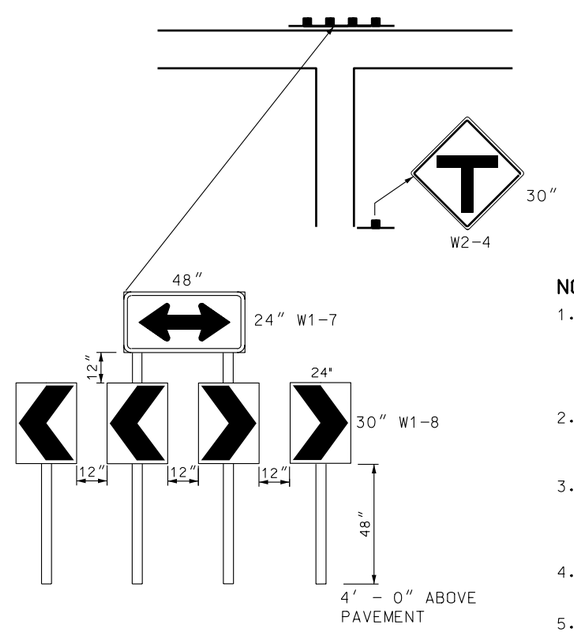

'T' INTERSECTION GUIDANCE

NOTES:

1. USE OM-3C, OM-3R, OR OM-3L TO MARK THE ENDS OF OBSTRUCTIONS SUCH AS NARROW BRIDGES,CULVERTS,ETC. FOR NARROW BRIDGES INSTALL THE MARKER ON EACH SIDE OF BOTH ENDS OF BRIDGE ON TWO-WAY ROADWAYS, AND ON EACH SIDE OF THE APPROACH END OF BRIDGE ON ONE-WAY ROADWAYS.
2. USE BARRIER MARKER TO MARK THE APPROACH TO THE ENDS OF BARRIERS THAT DO NOT HAVE AN ATTENUATOR OR END SECTION INSTALLED.
3. USE REFLECTIVE SHEETING CONFORMING TO SECTION 02891 OF THE UDOT STANDARD SPECIFICATIONS FOR ROAD AND BRIDGE CONSTRUCTION. USE REFLECTIVE YELLOW SHEETING OVER NON-REFLECTIVE BLACK SHEETING.
4. INSTALL THREE YELLOW DELINEATOR PLATES IN ACCORDANCE WITH STD DWG GW 9.
5. ATTACH CHEVRON ALIGNMENT PANELS & OBJECT MARKERS TO POST WITH VANDAL RESISTANT FASTENERS.
6. THE TRAFFIC ENGINEER DETERMINES PAVEMENT MARKINGS AND STRIPING FOR PAVEMENT TRANSITION.

REVISIONS

NO.	DATE	APPR.	REMARKS

UTAH DEPARTMENT OF TRANSPORTATION
STANDARD DRAWINGS FOR ROAD AND BRIDGE CONSTRUCTION
SALT LAKE CITY, UTAH

RECOMMENDED FOR APPROVAL — JAN.01,2005 DATE
CHAIRMAN STANDARDS COMMITTEE
APPROVED — JAN.01,2005 DATE
DEPUTY DIRECTOR

OBJECT MARKERS
"T" INTERSECTION AND
PAVEMENT TRANSITION
GUIDANCE
STANDARD DRAWING TITLE

STD DWG
ST 1

DGN File:N:\Esa\Standard_Drawings\Imperial\2005Approved\Sroping (ST)\st01.dgn
15-DEC-2004