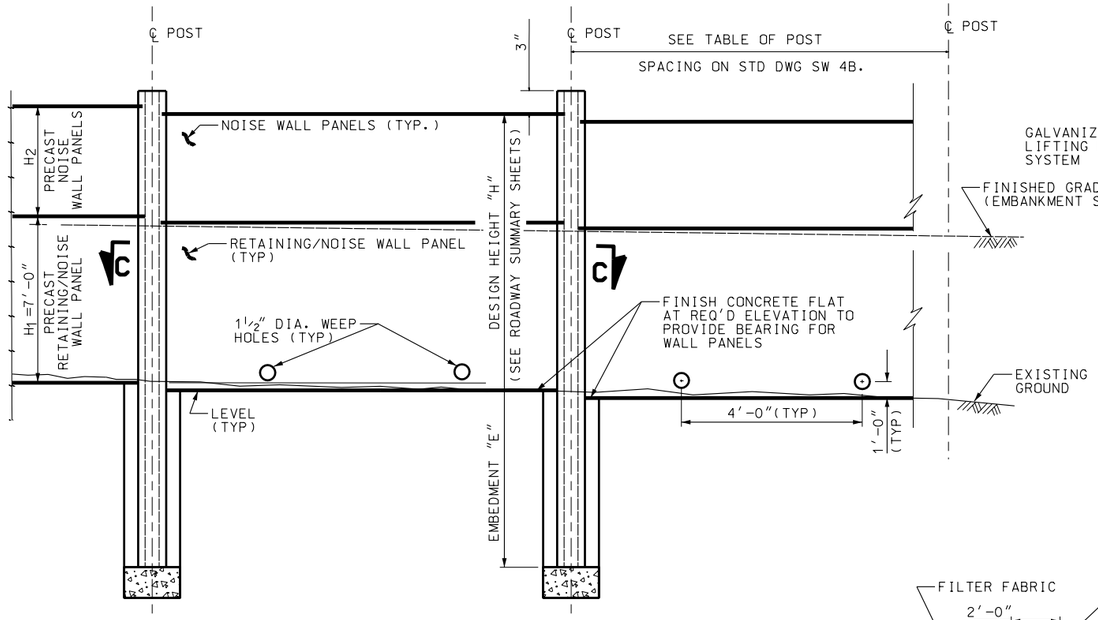

TYPICAL ELEVATION

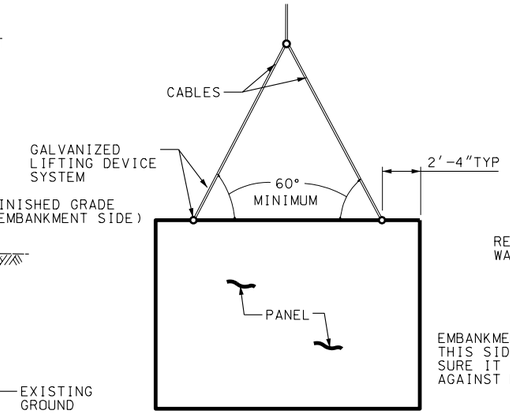

LIFTING DEVICE DETAIL

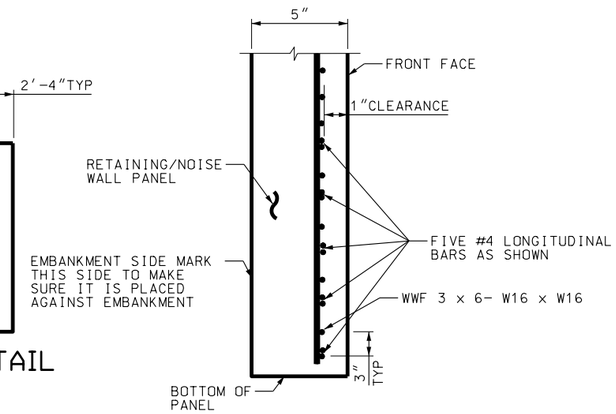

DETAIL "A"
(RETAINING/NOISE WALL PANEL ONLY)

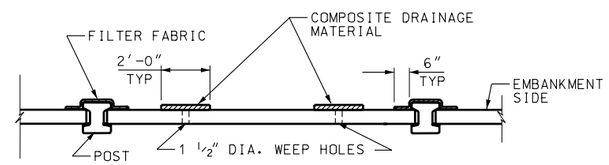

SECTION C-C

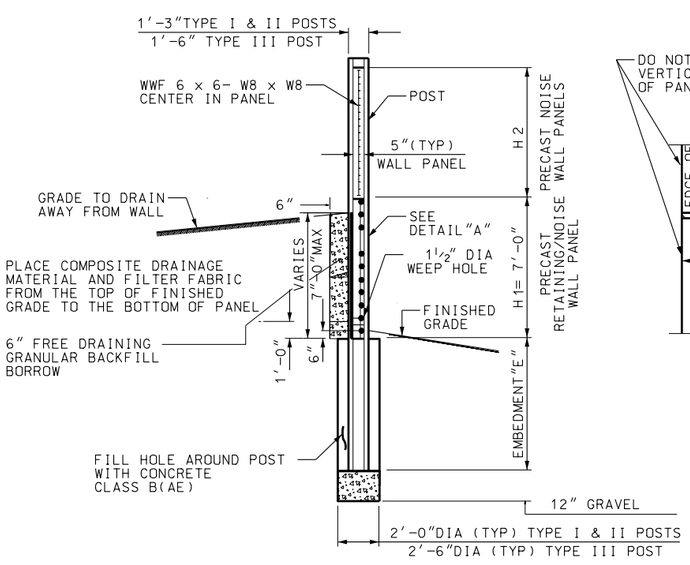

TYPICAL SECTION

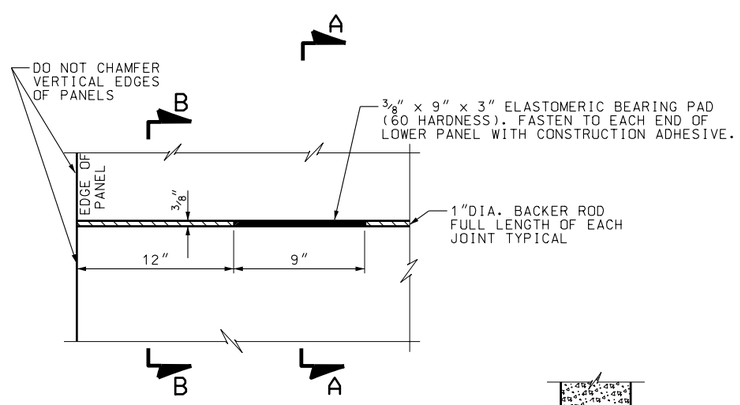

BEARING DETAIL

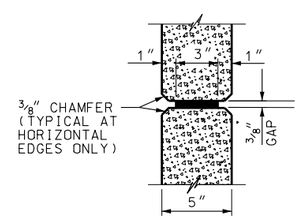

SECTION A-A

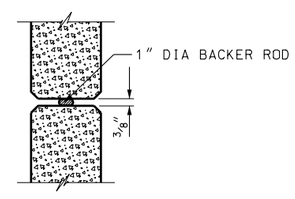

SECTION B-B

NOTES:

1. CHAMFER EXPOSED CONCRETE CORNERS AS SHOWN.
2. PROVIDE 2" COVER TO REINFORCING STEEL EXCEPT WHERE NOTED OTHERWISE.
3. SEE ROADWAY PLANS FOR LOCATION AND HEIGHT OF PRECAST RETAINING/NOISE WALL.
4. ALL PANELS ARE 11'-5" LONG AND 5" THICK.
5. SEE STD DWG SW 2 "NOISE WALL PLACEMENT AREA" FOR ADDITIONAL PLACEMENT INFORMATION.

DESIGN DATA

AASHTO GUIDE SPECIFICATIONS FOR STRUCTURAL DESIGN OF SOUND BARRIERS.
CONCRETE CLASS 4A(AE) f'c= 5,000 psi; fs (REINF.)= 24,000 psi; n=8.
CONCRETE CLASS B(AE) f'c= 2,500 psi (FOR HOLES AROUND POSTS ONLY)
EARTH PRESSURE = 36 lb./ft³

NO.	DATE	APPR.	REMARKS

REVISIONS

UTAH DEPARTMENT OF TRANSPORTATION
STANDARD DRAWINGS FOR ROAD AND BRIDGE CONSTRUCTION
SALT LAKE CITY, UTAH

RECOMMENDED FOR APPROVAL — JAN.01,2005 DATE
CHAIRMAN STANDARDS COMMITTEE
APPROVED — JAN.01,2005 DATE
DEPUTY DIRECTOR

PRECAST CONCRETE RETAINING/NOISE WALL 1 OF 2

STANDARD DRAWING TITLE

STD DWG
SW 4A

DGN: Exlan:NA\Eng\Standard Drawings\Highway\2005\Concrete\Structures and Walls (SW)\sw04a.dgn
15-DEC-2004